PEGLER

Valve technology

VSH PowerPress®

EN technical manual

aalberts integrated piping systems

welcome to Aalberts integrated piping systems

Aalberts Integrated Piping Systems develops and produces connectors, metal and plastic pipes, valves, and fastening technology for the distribution and control of liquids and gases. Our technologies enable customers to work quickly and reliably in a simple and efficient way. These bespoke systems are applicable for key vertical markets as residential, commercial, industrial, and Utilities, and are designed and developed by our team of in-house engineers. This complete piping and valve solution combined with our services are available through different channels.

At Aalberts Integrated Piping Systems, we have just one objective: we help our customers to get the job done.

don't just buy
products,
buy solutions.

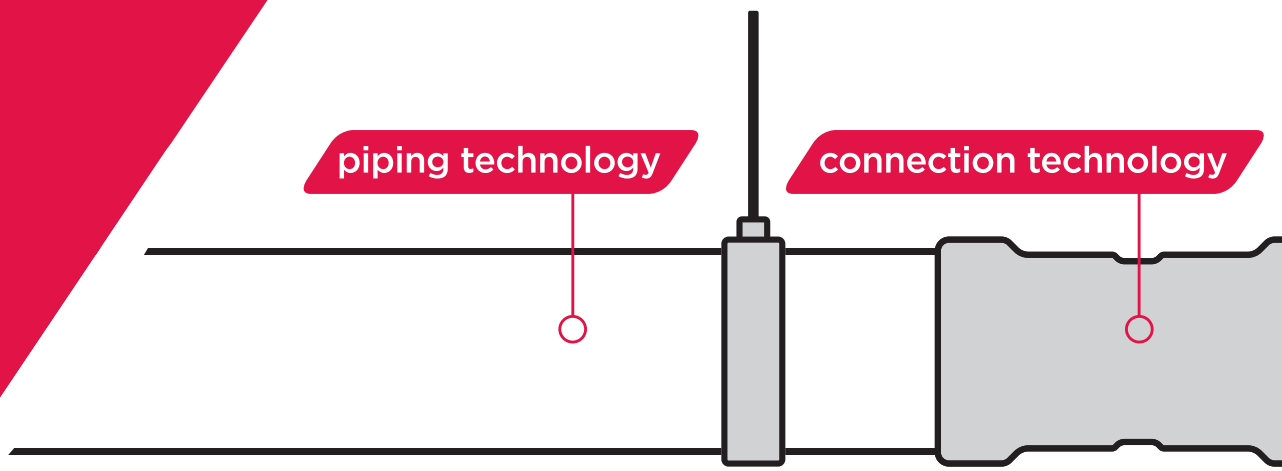

global footprint with a local presence

we operate from 30 locations in 14 countries

As the amalgamation of some of the world's most trusted manufacturers, we have a long-established, market leading presence in different key vertical markets. We operate from 30 locations in 14 countries and offer the most innovative and technically advanced product portfolios.

Our in-house engineers are constantly engaged in product development and innovations and we are the only business in the piping & valve industry **that offers its customers a complete integrated piping solution, each and every time.**

our end markets

technology leadership in selected end markets

Aalberts Integrated Piping Systems develops and produces connectors, metal and plastic pipes, valves, and fastening technology for the distribution and control of liquids and gases. Our technologies are easy to specify and maintain, and enable our customers to work quickly and reliably in a simple and efficient way. These bespoke systems are applicable for residential construction, non-residential construction, industrial use, fire protection and shipbuilding, and are designed and developed by our team of in-house engineers. This complete piping and valve solution is available through different channels.

As the first choice for customers maintaining existing piping and valve systems, or a complete installation for a new building, we can also help in the pre-build design phase. We work with experts to design the perfect tailor-made, integrated piping system for any new build projects. So whether the task is project conception, installation, or on-going maintenance, we are the ONLY company that truly delivers a complete product & service offering. Our know-how, our can-do, and our relentless innovation come as standard. **So don't just buy products. Buy solutions.**

our technologies

Aalberts Integrated Piping Systems consists of 4 core Technologies:

- valve technology. We offer valve solutions for industrial, residential and commercial areas and we produce from several locations in the globe. Our valves are highly trusted and respected, the comprehensive range of products offers superior quality throughout, and excellent value for money. The valves brands Apollo and Pegler are well known in their markets
- connection technology offers the broadest selection of fittings in the market, with a wide range of products. Our range is suitable for numerous applications and media for key verticals like commercial, industrial and residential. The connection brand VSH is very well known in many markets
- piping technology
- fastening technology

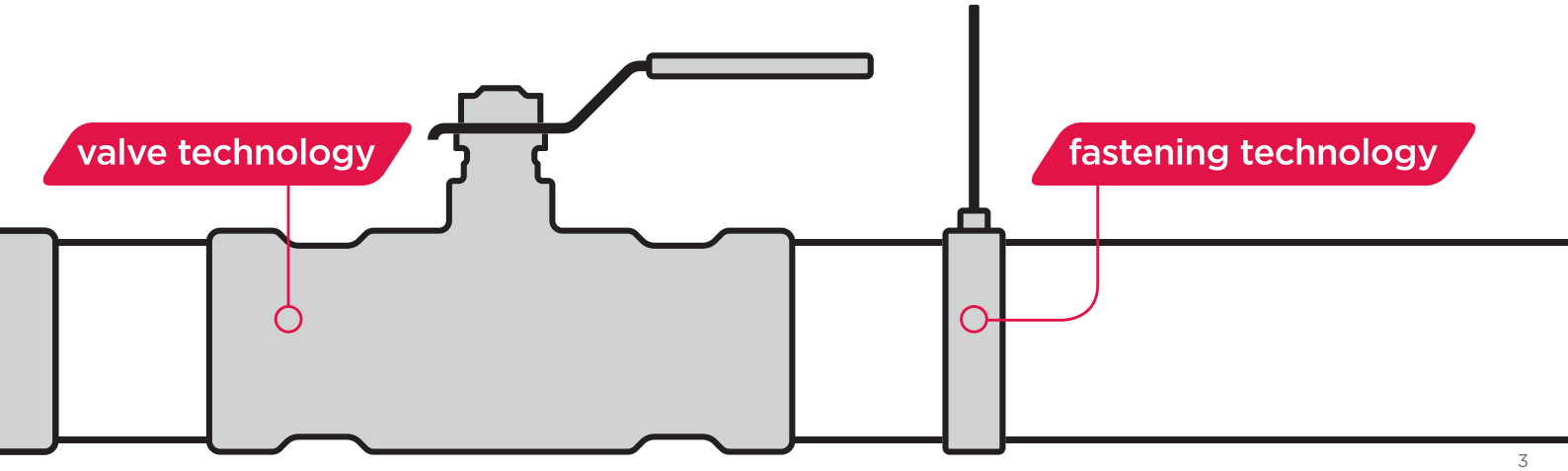

Pegler

Pegler provides the best solutions for integrated piping systems. This term encompasses a range of product lines for connection technology and valve technology which, together with our engineering service, offer the ultimate solution for top-quality total piping systems.

Our aim is to support you in the best way possible.

Don't just buy products, buy solutions

the strength of 'local sales organisation'

- the perfect solution for every project
- smart, fast and efficient installation
- Aalberts Integrated Piping Systems Engineering Service
- valuable advice from the drawing board to delivery
- a very wide product range, including fittings
- a 10-year system warranty
- all products are now BIM

The piping systems stand out due to their high and consistent quality, and quick and simple installation and maintenance. Pegler offers the widest, most comprehensive range of reliable press, compression, groove and push systems – including fittings for thick-walled and thin-walled metal and plastic tubes.

Aalberts Integrated Piping Systems Engineering Service

Pegler is a fully customer-focused sales and service organisation with experts who are committed to product development, service and customer support every single day. This means that from day one at the digital drawing board, you will receive professional advice on customised total solutions while being able to rely on optimum availability and reliable support both during and after delivery. Our engineers have access to all Aalberts Integrated Piping Systems products and can therefore always find the best solution which is fully customised to your needs.

Pegler is well known and respected as one of the leading manufacturers of advanced plumbing, heating and engineering products in the world. It's a reputation earned through a total dedication to quality, innovation and customer service that's been the hallmark of the company since it was established in the 1890's (originally trading as Pegler Ltd and Yorkshire Fittings Ltd).

Our success has been derived from a commitment to a philosophy based on quality, service, investment, competitiveness and innovation. Energy and water conservation is very much at the forefront of our product development.

Pegler's unique Integrated Piping System brings together valves, fittings and pipes in one complete pipe-work system, with an emphasis on delivering heat free jointing. IPS combines the best elements of modern connection and valve technology, with international quality approvals and cost effective solutions for every project.

As a business partner to some of the world's best known plumbing and heating suppliers, our unrivalled list of market leading product brands include Yorkshire integral solder ring fittings, Pegler Terrier radiator valves, VSH Tectite push-fit fittings, VSH PowerPress products, VSH Shurjoint solutions, the VSH XPress press-fit system, Pegler Valves, Prestex general brassware, Endex entfeed and Kuterlite compression fittings.

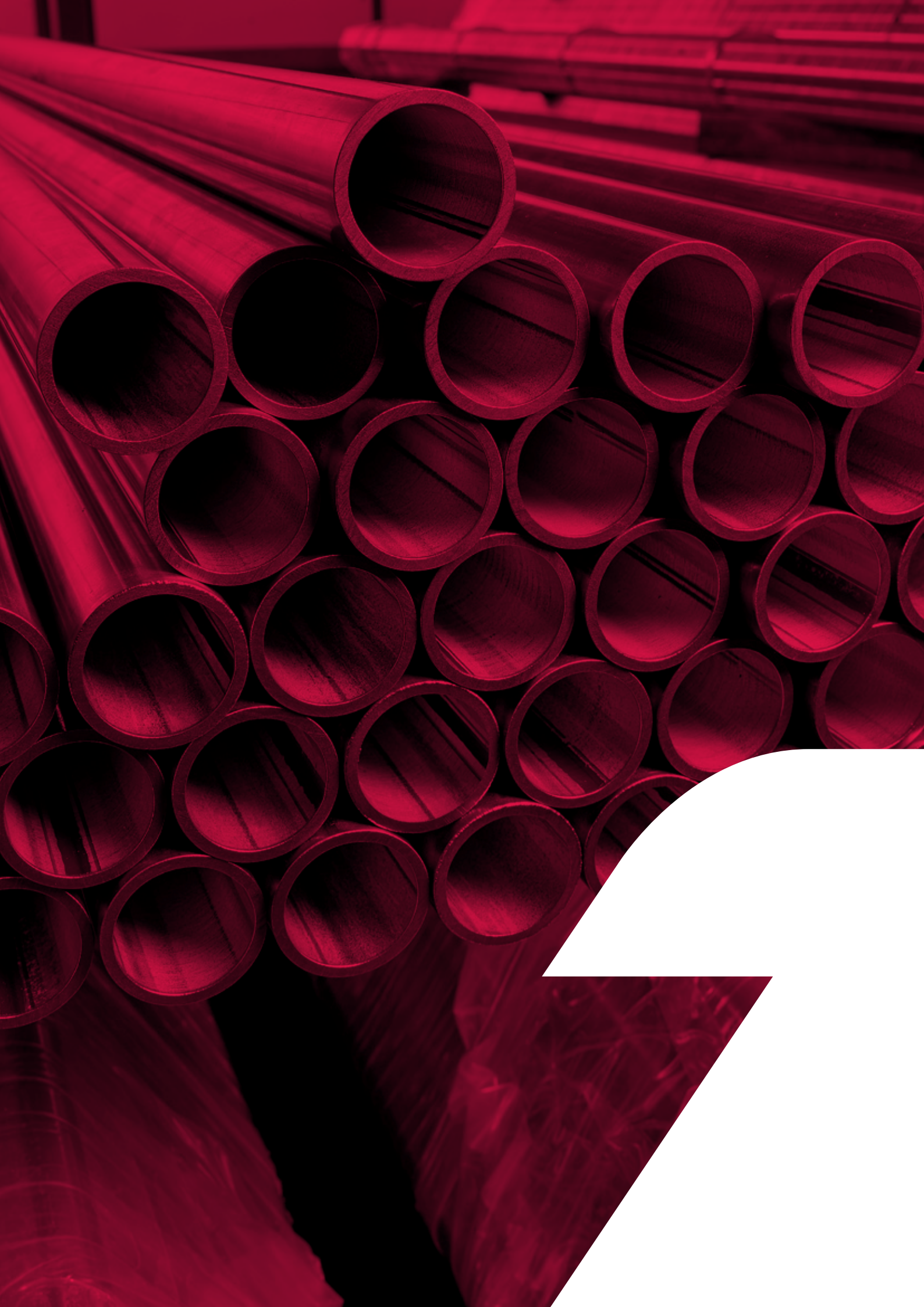

contents

Aalberts integrated piping systems 2

Pegler 4

VSH PowerPress 8

Introduction 8

fittings 11

valves by Pegler 19

tools and accessories 39

technical support information 43

technical data 44
VSH PowerPress pipes 45
VSH PowerPress fittings 46
press tools 48
installation guidelines 49
general installation information 51
built in 52
corrosion 53
impact of application and processing 55
effect of insulation 55

additional technical information 57

components, materials and characteristics 58

VSH PowerPress system

The VSH PowerPress product range is a press system designed for thick wall steel pipe according to DIN EN 10255, EN10220 and ASTM A53, A106, A135, A795 (schedule 10 to 40) standards. By using the VSH PowerPress system installation times are reduced significantly and a clean working environment is assured.

VSH PowerPress system products are manufactured using unique, modern machinery. Our completely automated factory guarantees you safe, high-quality products. All welded products undergo a 'leak test' in order to avoid any problems afterwards when installed.

the advantages of the VSH PowerPress system

- professional press tools
- simple, fast connection technology
- fittings from ½″ to 2″
- visual press indicator
- clear identification of materials and dimensions
- Leak Before Press function
- suitable for heating and cooling installations
- full line of valves

The VSH PowerPress system offers installers a complete solution with great flexibility. The VSH PowerPress system consists of fittings and the appropriate tools and can be used on standard available steel pipes. Furthermore, the VSH PowerPress fittings can also be used in conjunction with other brands of press tools*.

performance guaranteed

We guarantee consistent quality and supply, with all fittings being manufactured in the Netherlands. In order to ensure high-value manufacturing, we employ laser-welding technology and all welded fittings (100%) undergo leak testing. The leak testing is fully automated and incorporated in the laser-welding process. All straight connectors with a threaded end are made from a single piece so that there is no risk of leakage and it is more compact for recessed pipe work, good performance is guaranteed. The quality of our fittings is also proven by the large number of national and international tests. A wide range of system and product tests are available.

reliable

With VSH PowerPress systems, the quality of the connection is mainly determined by the tool and not the installer, thereby considerably reducing the risk of errors during installation. All fittings are fitted with a 'Leak Before Press' (LBP) function, which reduces the risk even further. This LBP function ensures that fittings, which have not been pressed, will leak during the initial pressure test. The installer can immediately see which fittings he forgot to press. Once pressed, the system is guaranteed airtight and watertight.

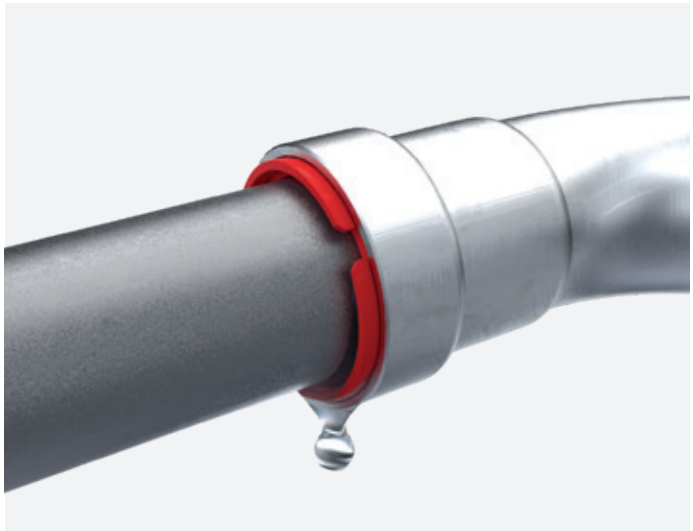

*See page 48

Next to the LBP function, all fittings are also equipped with a Visu-Control® feature. After finishing the pressing procedure the Visu-Control® ring will snap from the fitting, immediately showing which fitting has been pressed. This eliminates the need for marking already pressed fittings afterwards, adding additional safety and saving time.

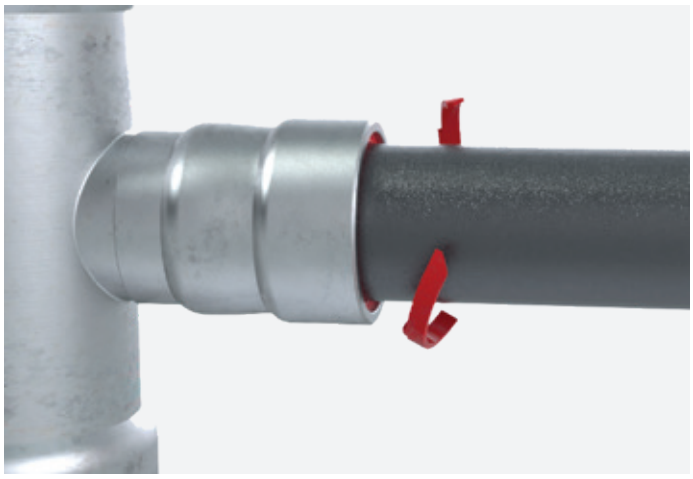

easy and clean

Compared to other 'cold' connection methods, VSH PowerPress is an extremely user-friendly solution:

- the use of VSH PowerPress dispenses with the need for complicated clamping techniques, time-consuming preparations and drying time - installation is faster and cleaner;
- no need to thread the pipes;
- no lubrication needed for installation;
- easy insertion of the pipe in the fitting due to the special design of the fittings;
- short radius bends ensure compact and space-saving installation.

The above features ensure that no special skills are required for an installation and that the work can be carried out in a pleasant and safe environment.

safe

The installation of the VSH PowerPress system does not require any heat source (as, for example welding or soldering) or other heavy and potentially dangerous tools. This feature makes VSH PowerPress the ideal solution for repairs or renovation projects, since you can ensure a minimum of disturbances at the site.

fast

This simple, fast connection technology and the short preparation times for the pipe result in further considerable cost savings in the installation. As the connection is only achieved using press tools, no other materials, such as gases, adhesives, threading machines, etc., need to be purchased or hired.

VSH PowerPress® fittings

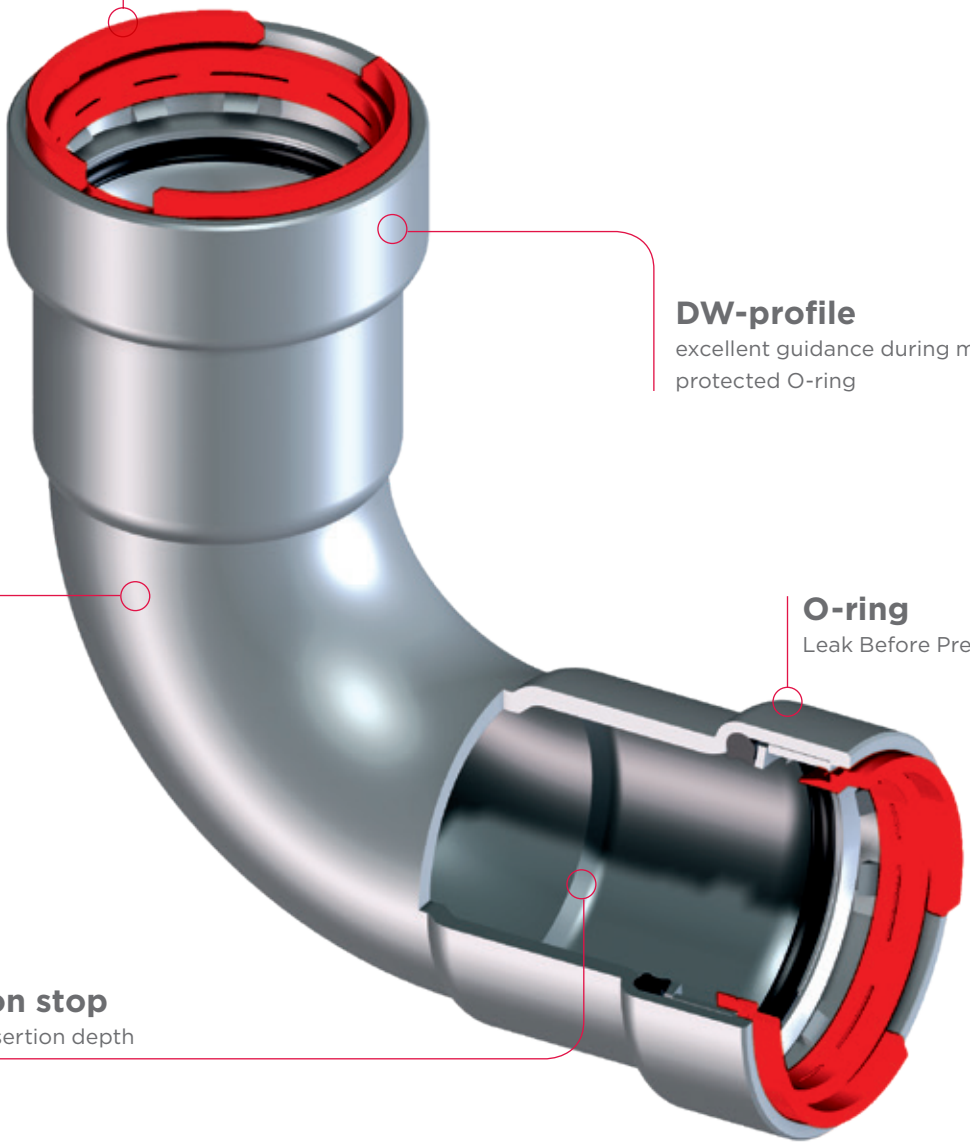

heating | cooling | compressed air

C9401 Straight Coupling
(2 x press)

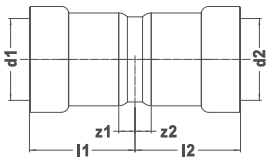

Dimension	Code	l1/l2	z1/z2
½″	PWR9400809	34	5
¾″	PWR9400811	38	6
1″	PWR9400820	43	6
1 ¼″	PWR9400831	56	7
1 ½″	PWR9400842	58	9
2″	PWR9400853	61	8

C9403 Slip Coupling
(2 x press)

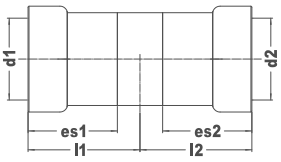

Dimension	Code	l1/l2	es1/es2
½″	PWR9400864	39	29
¾″	PWR9400875	42	32
1″	PWR9400886	47	37
1 ¼″	PWR9400897	59	49
1 ½″	PWR9400908	63	50
2″	PWR9400919	65	53

C9408 Bend 90°
(2 x press)

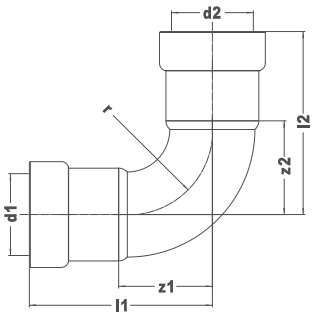

Dimension	Code	l1/l2	z1/z2	r
½″	PWR9400006	55	26	25
⅜″	PWR9400017	64	32	30
1″	PWR9400028	77	40	38
1 ¼″	PWR9400039	97	48	45
1 ½″	PWR9400041	104	55	50
2″	PWR9400050	122	69	65

C9411 Bend 90°
(press x male)

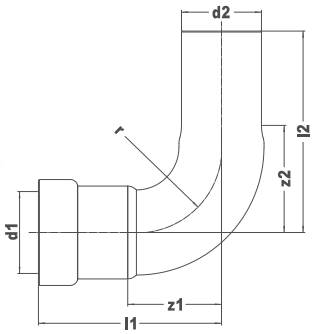

Dimension	Code	l1	l2	z1	z2	r
½″ x Ø ½″	PWR9400061	55	69	26	40	25
¾″ x Ø ¾″	PWR9400072	64	75	32	44	30
1″ x Ø 1″	PWR9400083	77	91	40	54	38
1 ¼″ x Ø 1 ¼″	PWR9400094	97	107	48	58	45
1 ½″ x Ø 1 ½″	PWR9400105	104	109	55	59	50
2″ x Ø 2″	PWR9400116	122	135	69	82	65

C9413 Bend 45°
(2 x press)

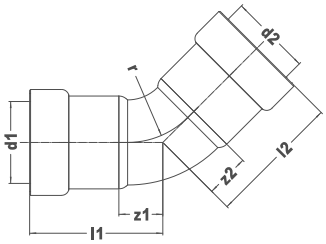

Dimension	Code	l1/l2	z1/z2	r
½″	PWR9400127	41	12	25
¾″	PWR9400138	46	15	30
1″	PWR9400149	54	18	38
1 ¼″	PWR9400151	71	22	45
1 ½″	PWR9400160	75	25	50
2″	PWR9400171	84	31	65

C9412 Bend 45°
(press x male)

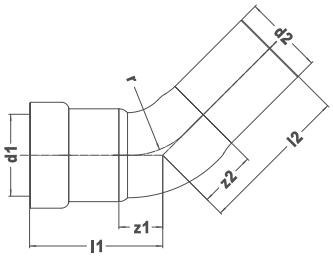

Dimension	Code	l1	l2	z1	z2	r
½″ x Ø ½″	PWR9400182	41	54	12	25	25
¾″ x Ø ¾″	PWR9400193	46	58	15	26	30
1″ x Ø 1″	PWR9400204	54	68	18	32	38
1 ¼″ x Ø 1 ¼″	PWR9400215	71	80	22	31	45
1 ½″ x Ø 1 ½″	PWR9400226	75	79	25	30	50
2″ x Ø 2″	PWR9400237	84	67	31	44	65

C9414 Tee
(3 x press)

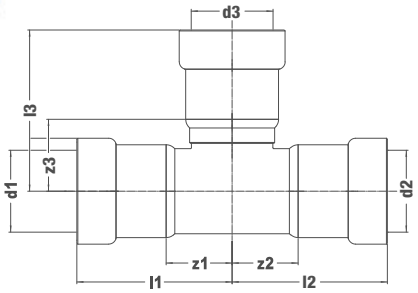

Dimension	Code	l1/l2	l3	z1/z2	z3
½″	PWR9400248	52	52	23	23
¾″	PWR9400259	58	59	26	28
1″	PWR9400261	67	68	30	32
1 ¼″	PWR9400270	82	86	33	37
1 ½″	PWR9400281	89	90	40	40
2″	PWR9400292	97	100	44	47

C9415 Tee Reduced
(3 x press)

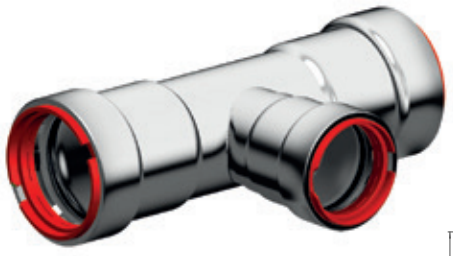

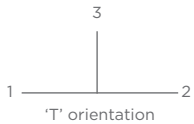

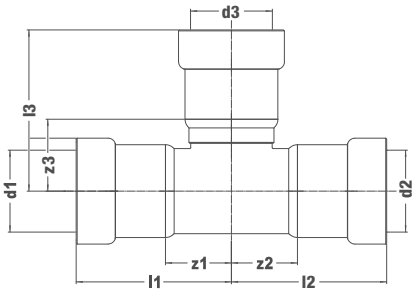

Dimension	Code	l1/l2	l3	z1/z2	z3
¾" x ¾" x ½"	PWR9400303	58	56	26	27
1" x 1" x ½"	PWR9400314	67	60	30	31
1" x 1" x ¾"	PWR9400325	67	63	30	32
1 ¼" x 1 ¼" x ½"	PWR9400336	82	56	35	29
1 ¼" x 1 ¼" x ¾"	PWR9400347	82	62	35	33
1 ¼" x 1 ¼" x 1"	PWR9400358	82	72	33	35
1 ½" x 1 ½" x ½"	PWR9400369	89	66	40	37
1 ½" x 1 ½" x ¾"	PWR9400371	89	69	40	38
1 ½" x 1 ½" x 1"	PWR9400380	89	74	40	38
1 ½" x 1 ½" x 1 ¼"	PWR9400391	89	88	40	39
2" x 2" x ½"	PWR9400402	97	73	44	44
2" x 2" x ¾"	PWR9400413	97	77	44	45
2" x 2" x 1"	PWR9400424	97	82	44	45
2" x 2" x 1 ¼"	PWR9400435	97	95	44	46
2" x 2" x 1 ½"	PWR9400446	97	97	44	48

C9418 Tee Branch Female
(press x press x female thread)

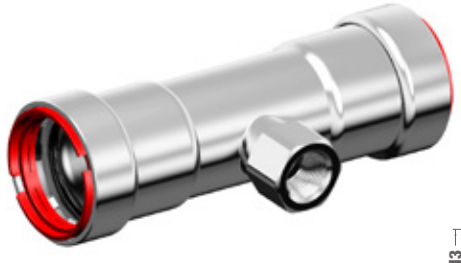

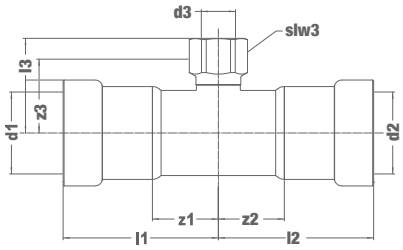

Dimension	Code	l1/l2	l3	z1/z2	z3	slw3
½" x ½" x Rp½"	PWR9400457	52	36	24	26	27
¾" x ¾" x Rp½"	PWR9400468	57	42	26	32	27
1" x 1" x Rp½"	PWR9400479	66	46	30	36	27
1" x 1" x Rp¾"	PWR9400481	66	47	30	31	32
1 ¼" x 1 ¼" x Rp½"	PWR9400490	82	50	34	40	27
1 ¼" x 1 ¼" x Rp¾"	PWR9401700	82	48	34	36	32
1 ¼" x 1 ¼" x Rp1"	PWR9401711	82	50	34	37	41
1 ½" x 1 ½" x Rp½"	PWR9400501	89	52	40	42	27
1 ½" x 1 ½" x Rp¾"	PWR9400512	89	53	40	37	32
1 ½" x 1 ½" x Rp1"	PWR9400523	89	57	40	38	41
2" x 2" x Rp½"	PWR9400534	96	60	43	50	27
2" x 2" x Rp¾"	PWR9400545	96	61	43	45	32
2" x 2" x Rp1"	PWR9400556	96	65	43	45	41

C9407 Reducer
(male x press)

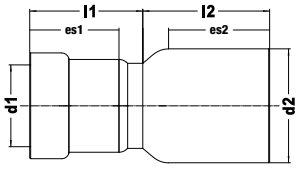

Dimension	Code	l1+l2	es1	es2
Ø ¾" x ½"	PWR9400921	64	28	36
Ø 1" x ½"	PWR9400930	69	28	41
Ø 1" x ¾"	PWR9400941	69	31	41
Ø 1 ¼" x ½"	PWR9400952	85	28	51
Ø 1 ¼" x ¾"	PWR9400963	85	31	51
Ø 1 ¼" x 1"	PWR9400974	85	36	49
Ø 1 ½" x ½"	PWR9400985	108	28	50
Ø 1 ½" x ¾"	PWR9400996	109	31	51
Ø 1 ½" x 1"	PWR9401007	87	36	51
Ø 1 ½" x 1 ¼"	PWR9401018	97	48	53
Ø 2" x ½"	PWR9401029	117	28	53
Ø 2" x ¾"	PWR9401031	118	31	53
Ø 2" x 1"	PWR9401040	119	36	54
Ø 2" x 1 ¼"	PWR9401051	100	48	52
Ø 2" x 1 ½"	PWR9401062	100	49	51

C9405 Straight Connector
(press x male thread)

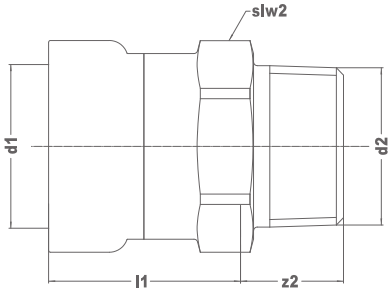

Dimension	Code	l1	z2	s1/w2
½″ x R½″	PWR9400567	35	18	28
¾″ x R¾″	PWR9400578	36	20	36
1″ x R1″	PWR9400589	41	23	41
1 ¼″ x R1 ¼″	PWR9400591	54	23	50
1 ½″ x R1 ½″	PWR9400600	54	23	57
2″ x R2″	PWR9400611	59	24	70

C9402 Straight Connector
(press x female thread)

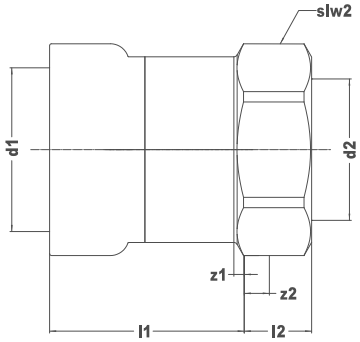

Dimension	Code	l1	l2	z1	z2	slw2
½″ x Rp½″	PWR9400622	32	14	4	6	28
¾″ x Rp¾″	PWR9400633	33	16	2	7	36
1″ x Rp1″	PWR9400644	39	18	3	8	41
1 ¼″ x Rp1 ¼″	PWR9400655	50	21	2	8	50
1 ½″ x Rp1 ½″	PWR9400666	51	20	2	8	57
2″ x Rp2″	PWR9400677	56	20	3	5	70

C9435 Straight Union
(press x male thread)

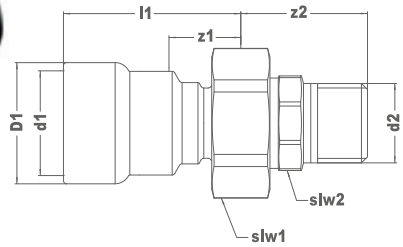

Dimension	Code	l1	l2	z1	z2	r
½″ x R½″	PWR9401436	48	20	33	36	25
¾″ x R¾″	PWR9401447	53	22	38	41	32
1″ x R1″	PWR9401458	59	23	42	50	39
1 ¼″ x R1 ¼″	PWR9401469	73	25	46	57	45

C9439 Reducer
(2 x press)

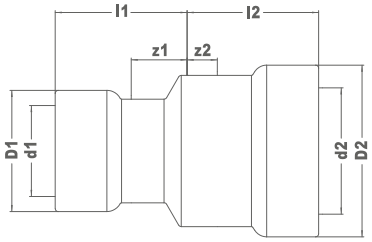

Dimension	Code	l1	l2	z1	z2
¾″ x ½″	PWR9401073	30	33	2	2
1″ x ½″	PWR9401084	31	39	2	3

C9426 Flanged Connector PN 10/16
(1 x press)

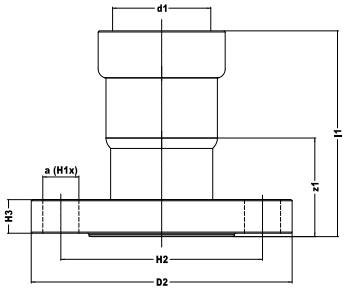

Dimension	Code	l1	z1	H1	H2	H3	D2	a	holes
1 ¼″	PWR9400710	92	44	18	100	16	140	18	4
1 ½″	PWR9400721	97	48	18	10	16	150	18	4
2″	PWR9400732	98	45	180	125	16	165	18	4

C9427 Flanged Connector PN6
(1 x press)

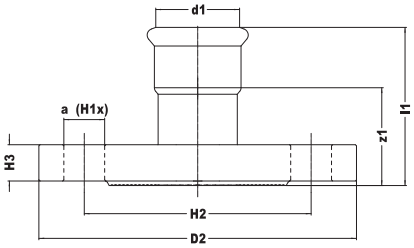

Dimension	Code	l1	z1	H1	H2	H3	D2	a	holes
1 ¼″	PWR9400688	88	40	14	90	12	120	14	4
1 ½″	PWR9400699	93	44	14	100	12	130	14	4
2″	PWR9400701	94	41	14	110	12	140	18	4

C9429 Stop End
(1x press)

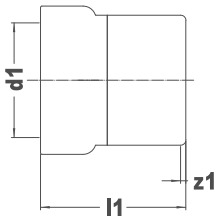

Dimension	Code	l1	z1
½″	PWR9400743	35	7
¾″	PWR9400754	38	7
1″	PWR9400765	43	8
1 ¼″	PWR9400776	56	8
1 ½″	PWR9400787	57	9
2″	PWR9400798	62	9

C9448 Transition for Grooved Couplings
(press x groove)

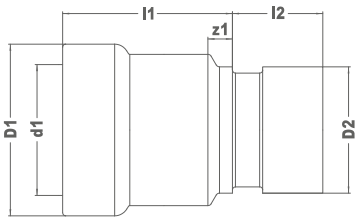

Dimension	Code	l1	l2	z1
1″ x 33.7	PWR9401095	45	24	9
1 ¼″ x 42.4	PWR9401106	58	24	10
1 ½″ x 48.3	PWR9401117	58	24	9
2″ x 60.3	PWR9401128	63	24	10

C9446 Coupling with Nut
(press x female thread)

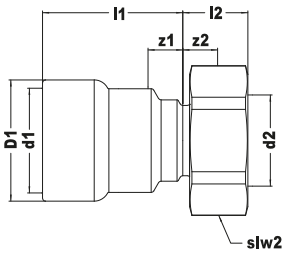

Dimension	Code	l1	l2	z1	z2	slw2
½″ x G¾″	PWR9401359	46	9	19	2	36
¾″ x G1″	PWR9401361	51	12	22	2	41
1″ x G1 ¼″	PWR9401370	57	12	23	2	50
1″ x G1 ½″	PWR9401381	54	12	19	2	57
1 ¼″ x G1 ½″	PWR9401392	71	12	24	2	57
1 ¼″ x G2″	PWR9401403	53	16	6	2	70
1 ½″ x G2″	PWR9401414	75	16	26	2	70
2″ x G2 ½″	PWR9401425	83	20	30	2	85

The maximum working temperature is limited to 120°C.

C9441 VSH XPress Transition
(press x press)

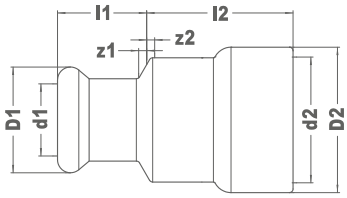

Dimension	Code	l1	l2	z1	z2
½″ x 15	PWR9401216	22	30	2	2
¾″ x 15	PWR9401238	23	33	2	2
1″ x 15	PWR9401249	23	33	3	2
¾″ x 22	PWR9401227	24	39	4	3
1″ x 28	PWR9401251	25	38	2	2
1 ¼″ x 35	PWR9401260	29	51	3	3
1 ½″ x 42	PWR9401271	33	52	3	3
2″ x 54	PWR9401282	38	56	3	3

C9452 Flat Seal
(black, EPDM)

Dimension	Code	l1	l2	z1	z2
½″ - ¾″	PWR9401471	24	32	2	4
1″	PWR9401480	25	35	3	13
1 ¼″ - 1 ½″	PWR9401491	26	41	4	19
2″	PWR9401502	25	34	2	11

The maximum working temperature is limited to 120°C.

VSH PowerPress®
valves
by Pegler

introducing VSH PowerPress valves

VSH PowerPress

Corrosion resistant, brass bodied, full bore ball valve with integrated VSH PowerPress connection and an ergonomically designed metal handle with identification and security features.

- chrome plated brass (CW617N) Full bore ball
- DZR brass (CW511L) body
- stainless steel (304) anti blow-out spindle
- EPDM spindle seats
- PTFE ball seats
- stainless steel (304) latch
- metal (Mazak) handle with TPE insert
- lockable latching handle
- reversible handle insert
- suitable for non-potable water applications
- press indicators
- socket protection

union connection

extension

extension union

by Pegler

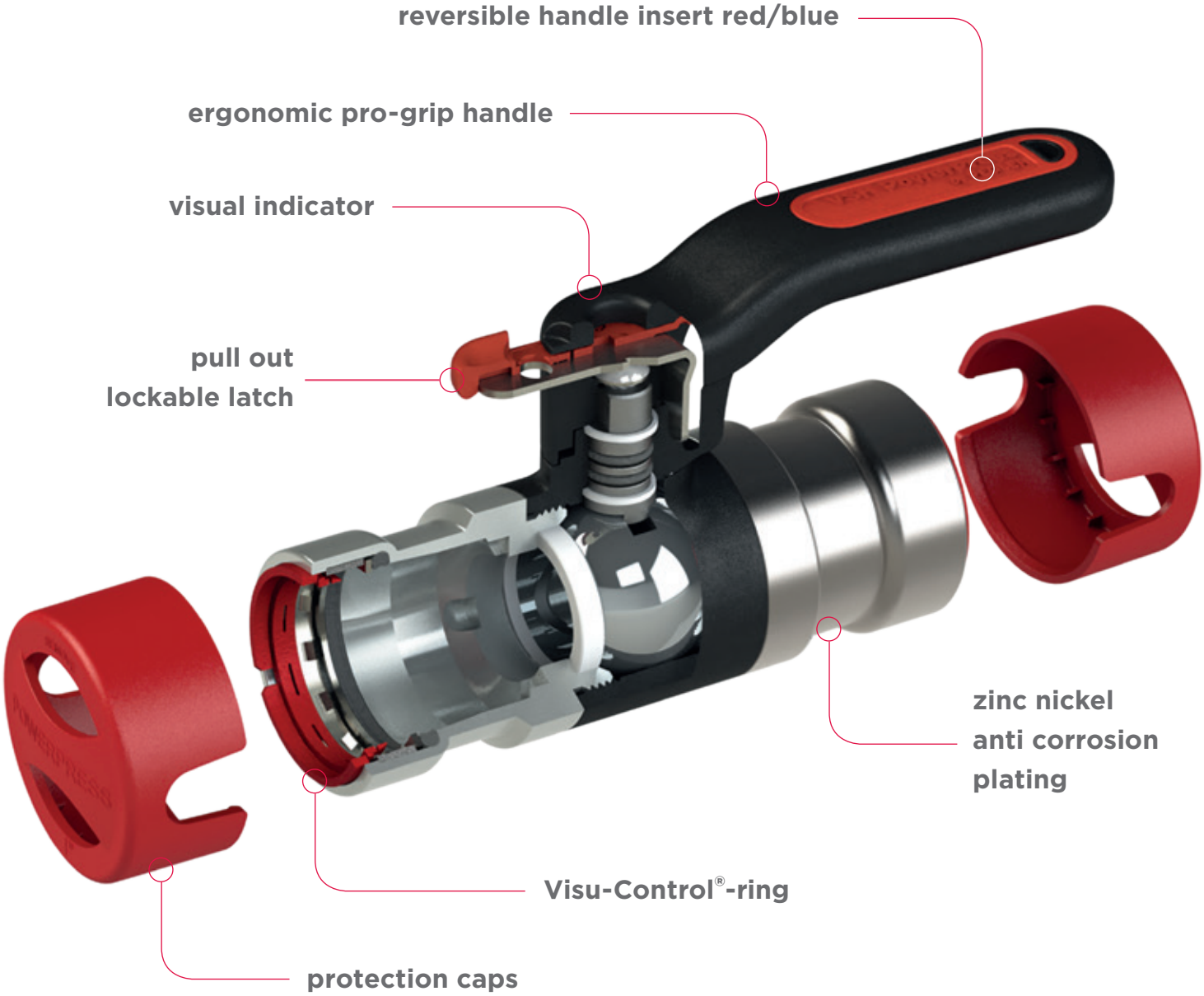

Connections						Max Temp	Max Pressure
½"	¾"	1"	1 ¼"	1 ½"	2"	135°C	16 bar

PP550 Ball Valve PN16

specification

- lockable latching handle
- identifiable lock indication
- reversible handle insert
- suitable for non potable water applications
- socket transport protection
- visual press indicators
- corrosion resistant
- chrome plated brass (CW617N) full bore ball
- PTFE ball seats
- DZR brass (CW511L) body

DN	Connection	Code	Total (kg)	Kvs
DN15	½"	PWR9440002	0.57	17
DN20	¾"	PWR9440013	0.67	41
DN25	1"	PWR9440024	0.92	70
DN32	1 ¼"	PWR9440035	1.31	121
DN40	1 ½"	PWR9440046	1.76	200
DN50	2"	PWR9440057	2.77	292

	Metric			Imperial		
DN	Max Pressure (Bar)	Min Temp (°C)	Max Temp (°C)	Max Pressure (PSI)	Min Temp (°F)	Max Temp (°F)
DN15	16	-10	135	232	14	275
DN20	16	-10	135	232	14	275
DN25	16	-10	135	232	14	275
DN32	16	-10	135	232	14	275
DN40	16	-10	135	232	14	275
DN50	16	-10	135	232	14	275

See page 58 for further details.

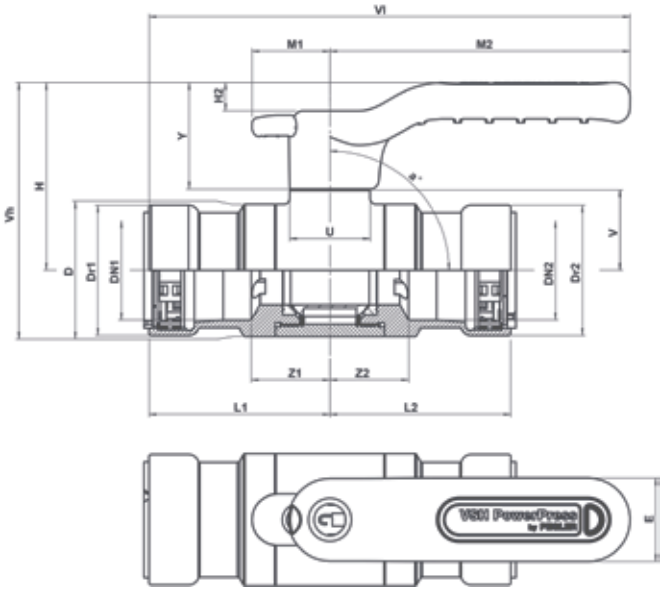

Size	L1	Z1	L2	Z2	DN1	Dr1	D	DN2	Dr2	U	a°	V	H	H2	Y	E	M1	M2	Vh	Vl
½"	54.5	26.5	54.5	26.5	½"	32	31	½"	32	28	90	22.5	59.5	10	37	29	27/34	105	76	159
¾"	54.5	24	54.5	24	¾"	38	38	¾"	22	28	90	25	56	10	37	29	27/34	105	81	159
1"	63	27.5	63	27.5	1"	45.5	46	1"	45.5	28	90	28	65	10	37	29	27/34	105	88.5	167.5
1 ¼"	80	31.5	80	31.5	1 ¼"	56	57	1 ¼"	56	28	90	34	71	10	37	29	27/34	105	100	184
1 ½"	83	34.5	83	34.5	1 ½"	62	66	1 ½"	62	28	90	41	77	10	37	29	27/34	165	111	248
2"	93	40	93	40	2"	74	83	2"	74	28	90	48	85	10	37	29	27/34	165	127	258

Nr	Component	Material
1	Body	DZR brass CW511L
2	Cap	Carbon steel zinc nickel plated
3	PowerPress "O" ring	EPDM
4	Spacer ring	Stainless steel
5	Grab ring	Stainless steel
6	Visu-Control® ring	Polypropylene
7	Protection cap	Polypropylene

See page 58 for further details.

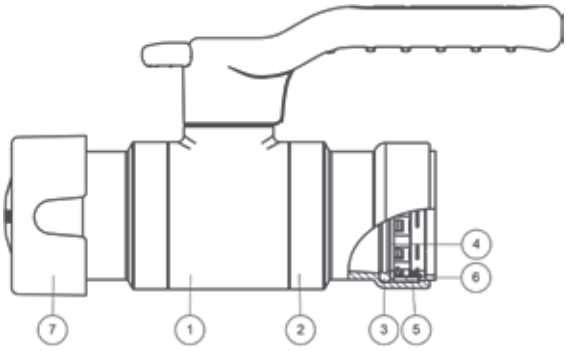

heating | cooling | compressed air

10 Bar max.

PPSU550 Ball Valve PN16

specification

- lockable latching handle
- identifiable lock indication
- reversible handle insert
- suitable for non potable water applications
- socket transport protection
- visual press and union indicators
- corrosion resistant
- chrome plated brass (CW617N) full bore ball
- PTFE ball seats
- DZR brass (CW511L) body

DN	Connection	Code	Total (kg)	Kvs
DN15	½"	PWR9440068	0.84	17
DN20	¾"	PWR9440079	1.00	41
DN25	1"	PWR9440081	1.42	70
DN32	1 ¼"	PWR9440090	1.94	121
DN40	1 ½"	PWR9440101	2.73	200
DN50	2"	PWR9440112	4.14	292

	Metric			Imperial		
DN	Max Pressure (Bar)	Min Temp (°C)	Max Temp (°C)	Max Pressure (PSI)	Min Temp (°F)	Max Temp (°F)
DN15	16	-10	135	232	14	275
DN20	16	-10	135	232	14	275
DN25	16	-10	135	232	14	275
DN32	16	-10	135	232	14	275
DN40	16	-10	135	232	14	275
DN50	16	-10	135	232	14	275

See page 59 for further details.

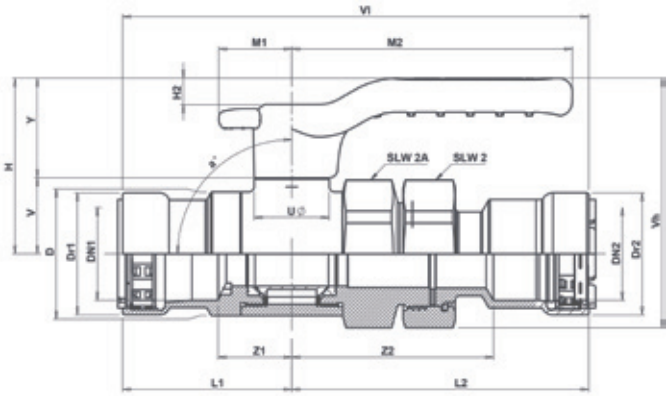

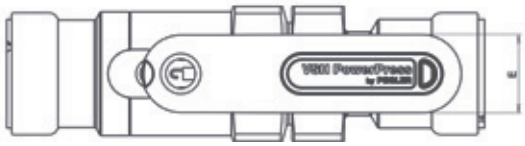

Size	L1	Z1	L2	Z2	DN1	Dr1	SLW2	SLW2A	DN2	Dr2	D	U	a°	V	H	H2	Y	E	M1	M2	Vh	Vl
½"	54.5	26.5	96	68	½"	32	36	36	½"	32	31	28	90	22.5	59.5	10	37	29	27/34	105	79.5	150
¾"	54.5	24	102	72	¾"	38	41	41	¾"	38	38	28	90	25	56	10	37	29	27/34	105	84.5	157
1"	63	27.5	111	75	1"	45.5	50	50	1"	45.5	46	28	90	28	65	10	37	29	27/34	105	93	174
1 ¼"	80	31.5	126	77.5	1 ¼"	56	57	60	1 ¼"	56	57	28	90	34	71	10	37	29	27/34	105	104	204.5
1 ½"	83	34.5	139	90	1 ½"	62	70	70	1 ½"	62	66	28	90	41	77	10	37	29	27/34	165	116	222
2"	93	40	158	104.5	2"	74	85	85	2"	74	83	28	90	48	85	10	37	29	27/34	165	132	251

Nr	Component	Material
1	Body	DZR brass CW511L
2	Cap	Carbon steel zinc nickel plated
3	PowerPress "O" ring	EPDM
4	Spacer ring	Stainless steel
5	Grab ring	Stainless steel
6	Visu-Control® ring	Polypropylene
7	Protection cap	Polypropylene
8	Union end cap	Carbon steel zinc nickel plated
9	PowerPress union tail	Carbon steel zinc nickel plated

See page 59 for further details.

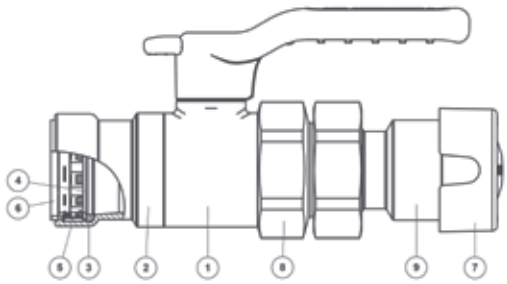

heating | cooling | compressed air

10 Bar max.

PP550 Ball Valve EL PN16

specification

- lockable latching extended handle
- identifiable lock indication
- reversible handle insert
- suitable for non potable water applications
- socket transport protection
- visual press indicators
- corrosion resistant
- chrome plated brass (CW617N) full bore ball
- PTFE ball seats
- DZR brass (CW511L) body

DN	Connection	Code	Total (kg)	Kvs
DN15	½″	PWR9440123	0.71	17
DN20	¾″	PWR9440134	0.81	41
DN25	1″	PWR9440145	1.06	70
DN32	1 ¼″	PWR9440156	1.45	121
DN40	1 ½″	PWR9440167	1.90	200
DN50	2″	PWR9440178	2.91	292

	Metric			Imperial		
DN	Max Pressure (Bar)	Min Temp (°C)	Max Temp (°C)	Max Pressure (PSI)	Min Temp (°F)	Max Temp (°F)
DN15	16	-10	135	232	14	275
DN20	16	-10	135	232	14	275
DN25	16	-10	135	232	14	275
DN32	16	-10	135	232	14	275
DN40	16	-10	135	232	14	275
DN50	16	-10	135	232	14	275

See page 60 for further details.

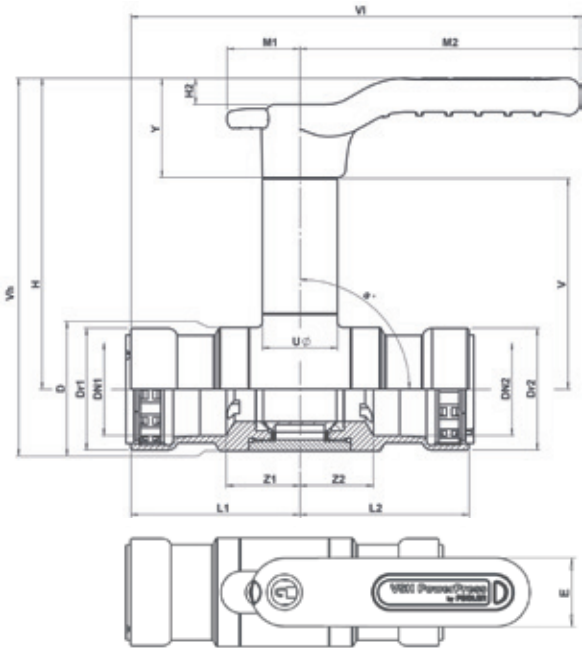

Size	L1	Z1	L2	Z2	DN1	Dr1	D	DN2	Dr2	U	a°	V	H	H2	Y	E	M1	M2	Vh	Vl
½″	54.5	26.5	54.5	26.5	½″	32	31	½″	32	28	90	73.5	110	10	37	29	27/34	105	126.5	159
¾″	54.5	24	54.5	24	¾″	38	38	¾″	38	28	90	76	113	10	37	29	27/34	105	132	159
1″	63	27.5	63	27.5	1″	45.5	46	1″	45.5	28	90	79.5	116.5	10	37	29	27/34	105	139.5	167.5
1 ¼″	80	31.5	80	31.5	1 ¼″	56	57	1 ¼″	56	28	90	85.5	122.5	10	37	29	27/34	105	151	184
1 ½″	83	34.5	83	34.5	1 ½″	62	66	1 ½″	62	28	90	91.7	128.5	10	37	29	27/34	165	157	247.5
2″	93	40	93	40	2″	74	83	2″	74	28	90	99.3	136	10	37	29	27/34	165	178	257.5

Nr	Component	Material
1	Body	DZR brass CW511L
2	Cap	Carbon steel zinc nickel plated
3	PowerPress "O" ring	EPDM
4	Spacer ring	Stainless steel
5	Grab ring	Stainless steel
6	Visu-Control® ring	Polypropylene
7	Protection cap	Polypropylene

See page 60 for further details.

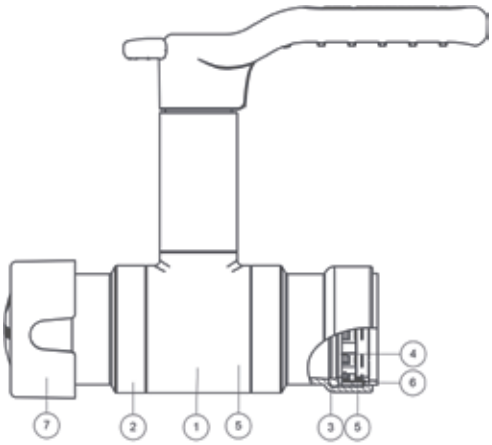

heating | cooling | compressed air

10 Bar max.

PPSU550 Ball Valve EL PN16

specification

- lockable latching extended handle
- identifiable lock indication
- reversible handle insert
- suitable for non potable water applications
- socket transport protection
- visual press and union indicators
- corrosion resistant
- chrome plated brass (CW617N) full bore ball
- PTFE ball seats
- DZR brass (CW511L) body

DN	Connection	Code	Total (kg)	Kvs
DN15	½″	PWR9440189	0.98	17
DN20	¾″	PWR9440191	1.14	41
DN25	1″	PWR9440200	1.56	70
DN32	1 ¼″	PWR9440211	2.08	121
DN40	1 ½″	PWR9440222	2.87	200
DN50	2″	PWR9440233	4.28	292

	Metric			Imperial		
DN	Max Pressure (Bar)	Min Temp (°C)	Max Temp (°C)	Max Pressure (PSI)	Min Temp (°F)	Max Temp (°F)
DN15	16	-10	135	232	14	275
DN20	16	-10	135	232	14	275
DN25	16	-10	135	232	14	275
DN32	16	-10	135	232	14	275
DN40	16	-10	135	232	14	275
DN50	16	-10	135	232	14	275

See page 61 for further details.

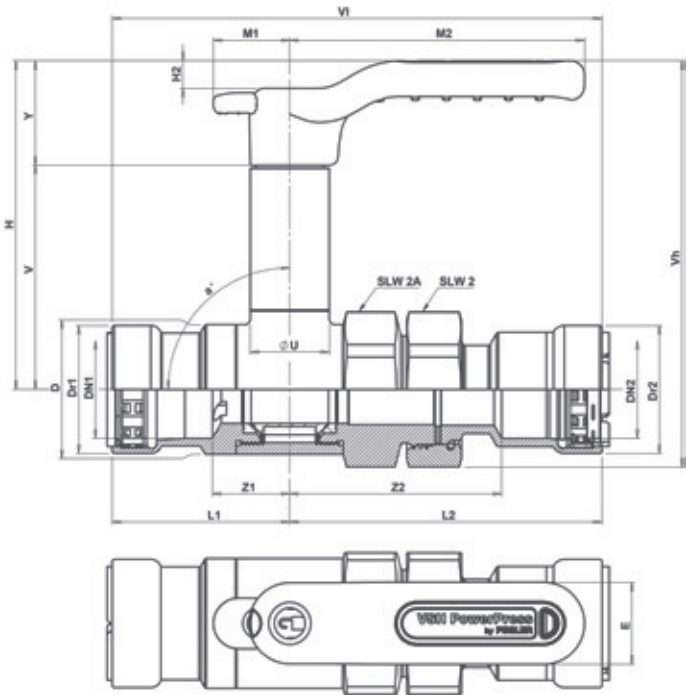

Size	L1	Z1	L2	Z2	DN1	Dr1	SLW2	SLW2A	DN2	Dr2	D	U	a°	V	H	H2	Y	E	M1	M2	Vh	Vl
½″	54.5	26.5	96	68	½″	32	36	36	½″	32	31	28	90	73.5	110	10	37	29	27/34	105	130.5	150
¾″	54.5	24	102	72	¾″	38	41	41	¾″	38	38	28	90	76	113	10	37	29	27/34	105	135.5	157
1″	63	27.5	111	75	1″	45.5	50	50	1″	45.5	46	28	90	79.5	116.3	10	37	29	27/34	105	144	174
1 ¼″	80	31.5	126	77.5	1 ¼″	56	57	60	1 ¼″	56	57	28	90	85.5	122.2	10	37	29	27/34	105	155	204.5
1 ½″	83	34.5	139	90	1 ½″	62	70	70	1 ½″	62	66	28	90	91.7	128.5	10	37	29	27/34	105	167	222
2″	93	40	158	104.5	2″	74	85	85	2″	74	83	28	90	99.3	136	10	37	29	27/34	105	183	251

Nr	Component	Material
1	Body	DZR brass CW511L
2	Cap	Carbon steel zinc nickel plated
3	PowerPress "O" ring	EPDM
4	Spacer ring	Stainless steel
5	Grab ring	Stainless steel
6	Visu-Control® ring	Polypropylene
7	Protection cap	Polypropylene
8	Union end cap	Carbon steel zinc nickel plated
9	PowerPress union tail	Carbon steel zinc nickel plated

See page 61 for further details.

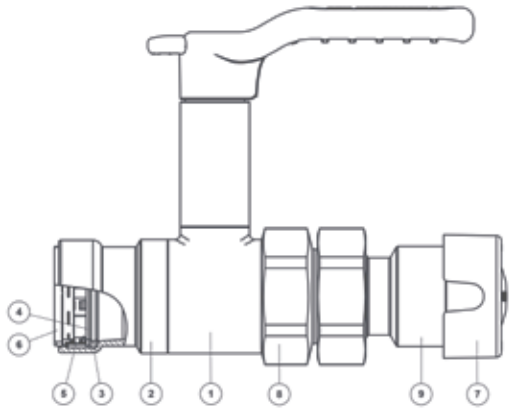

heating

cooling

compressed air

10 Bar max.

PP1260 Static Balancing Valve PN16

specification

- fixed orifice
- regulation, isolation and flow measurement
- includes test points
- easy turn grip handle
- handle position indicator
- includes memory stop
- suitable for non potable water applications
- socket transport protection
- visual press indicators
- corrosion resistant

DN	Connection	Code	Total (kg)	Kv	Kvs
DN15 (LF)	½"	PWR9440486	0.69	0.40	0.41
DN15 (SF)	½"	PWR9440497	0.69	1.86	2.15
DN20 (SF)	¾"	PWR9440508	0.80	3.36	4.78
DN25 (SF)	1"	PWR9440519	1.13	6.11	8.11
DN32 (SF)	1 ¼"	PWR9440521	1.78	12.65	15.41
DN40 (SF)	1 ½"	PWR9440530	2.23	19.00	22.23
DN50 (SF)	2"	PWR9440541	3.39	28.42	48.21

	Metric			Imperial		
DN	Max Pressure (Bar)	Min Temp (°C)	Max Temp (°C)	Max Pressure (PSI)	Min Temp (°F)	Max Temp (°F)
DN15	16	-10	135	232	14	275
DN20	16	-10	135	232	14	275
DN25	16	-10	135	232	14	275
DN32	16	-10	135	232	14	275
DN40	16	-10	135	232	14	275
DN50	16	-10	135	232	14	275

See page 62 for further details.

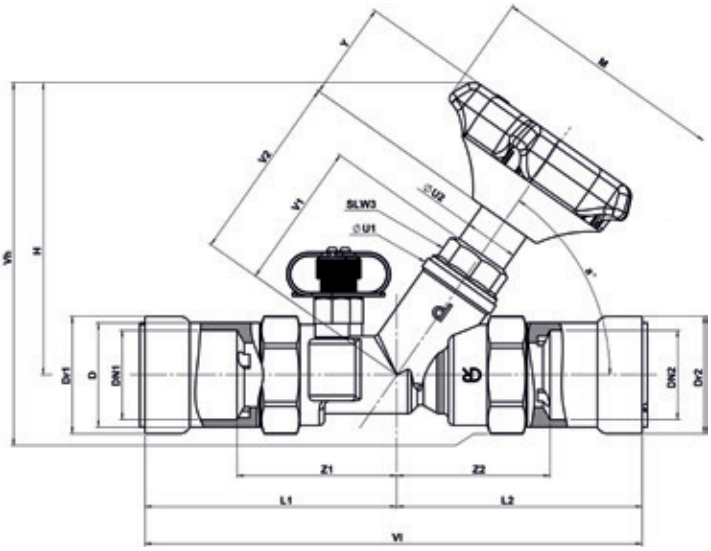

Size	L1	Z1	L2	Z2	DN1	Dr1	D	DN2	Dr2	SLW3	U1	U2	a°	V1	V2	H	Y	M	Vh	Vl
½"	77.5	49.5	77.5	49.5	½"	32	27.4	½"	32	22	26.5	20	55	53	64	106	38	90	122	155
¾"	83	52.5	83	52.5	¾"	38	33.1	¾"	38	22	26.5	20	55	53	64	106	38	90	125	165.5
1"	97.5	62	95	59.5	1"	45.5	63	1"	45.5	25	32	21.5	55	57	73	113	38	90	136	192.5
1 ¼"	116	68	124	76	1 ¼"	56	49.1	1 ¼"	56	32	41	-	55	64	81	120	38	90	149	240.5
1 ½"	120	71	132	83	1 ½"	62	55.7	1 ½"	62	35	49.5	-	55	66	85	123	38	90	155	251.5
2"	136.5	83	150.5	97.5	2"	74	67.9	2"	74	35	29	-	55	80	103	138	38	90	178	287

	Litre/second		Litre/minute		Litre/hour	
DN	Min Flow	Max Flow	Min Flow	Max Flow	Min Flow	Max Flow
DN15	0.06	0.12	3.6	6.9	216	414
DN20	0.13	0.21	8.0	12.5	480	750
DN25	0.23	0.38	13.5	22.8	810	1368
DN32	0.43	0.79	25.7	47.1	1542	2826
DN40	0.62	1.18	37.1	70.8	2226	4248
DN50	1.34	1.77	80.4	105.9	4824	6354

Nr	Component	Material
1	1260 Body	DZR cast brass
2	PowerPress adaptor	Carbon steel zinc nickel plated
3	PowerPress 'O' ring	EPDM
4	Separator spacer ring	Stainless steel
5	Grab ring	Stainless steel
6	Visu-Control® ring	Stainless steel
7	Protection cap	Polypropylene

See page 62 for further details.

heating

cooling

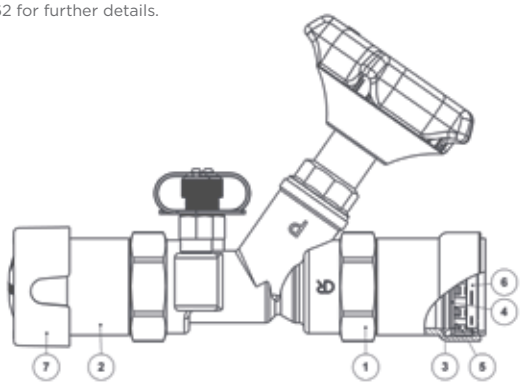

PPSU1260 Static Balancing Valve PN16

specification

- fixed orifice
- regulation, isolation and flow measurement
- includes test points
- easy turn grip handle
- handle position indicator
- includes memory stop
- suitable for non potable water applications
- socket transport protection
- visual press and union indicators
- corrosion resistant

DN	Connection	Code	Total (kg)	Kv	Kvs
DN15 (LF)	½"	PWR9440552	0.90	0.40	0.41
DN15 (SF)	½"	PWR9440563	0.90	1.86	2.15
DN20 (SF)	¾"	PWR9440574	1.10	3.36	4.78
DN25 (SF)	1"	PWR9440585	1.63	6.11	8.11
DN32 (SF)	1 ¼"	PWR9440596	2.37	12.65	15.41
DN40 (SF)	1 ½"	PWR9440607	3.10	19.00	22.23
DN50 (SF)	2"	PWR9440618	4.80	28.42	48.21

	Metric			Imperial		
DN	Max Pressure (Bar)	Min Temp (°C)	Max Temp (°C)	Max Pressure (PSI)	Min Temp (°F)	Max Temp (°F)
DN15	16	-10	135	232	14	275
DN20	16	-10	135	232	14	275
DN25	16	-10	135	232	14	275
DN32	16	-10	135	232	14	275
DN40	16	-10	135	232	14	275
DN50	16	-10	135	232	14	275

See page 63 for further details.

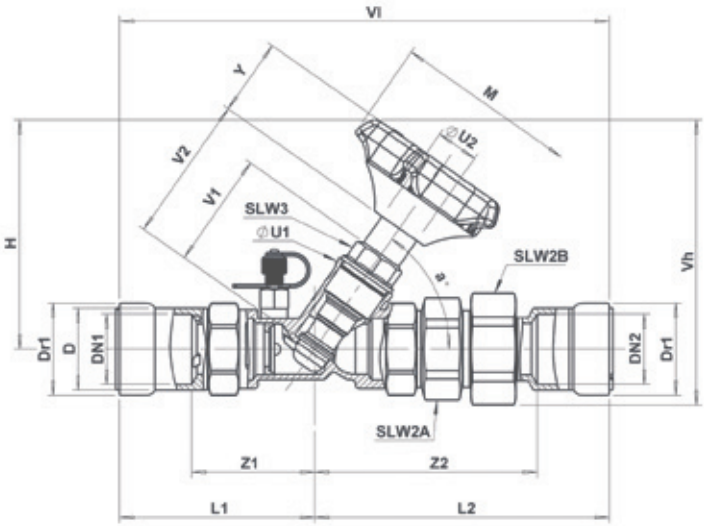

Size	L1	Z1	L2	Z2	DN1	Dr1	D	DN2	Dr2	SLW2A	SLW2B	SLW3	U1	U2	a°	V1	V2	H	Y	M	Vh	Vl
½"	77.5	49.5	120	91.5	½"	32	27.4	½"	32	27	36	22	26.5	20	55	53	64	106	38	90	126	197.5
¾"	83	52.5	132	101.5	¾"	38	33.1	¾"	38	32	41	22	26.5	20	55	53	64	106	38	90	128	215
1"	97.5	62	144	108.5	1"	45.5	63	1"	45.5	46	50	25	32	21.5	55	57	73	113	38	90	141	241.5
1 ¼"	116	68	173.5	125.5	1 ¼"	56	49.1	1 ¼"	56	50	57	32	41	-	55	64	81	120	38	90	151	290
1 ½"	120	71	187	138	1 ½"	62	55.7	1 ½"	62	60	70	35	49.5	-	55	66	85	123	38	90	162	306.5
2"	136.5	83	218.5	165	2"	74	67.9	2"	74	75	85	35	29	-	55	80	103	138	38	90	185	355

	Litre/second		Litre/minute		Litre/hour	
DN	Min Flow	Max Flow	Min Flow	Max Flow	Min Flow	Max Flow
DN15	0.06	0.12	3.6	6.9	216	414
DN20	0.13	0.21	8.0	12.5	480	750
DN25	0.23	0.38	13.5	22.8	810	1368
DN32	0.43	0.79	25.7	47.1	1542	2826
DN40	0.62	1.18	37.1	70.8	2226	4248
DN50	1.34	1.77	80.4	105.9	4824	6354

Nr	Component	Material
1	1260 valve	DZR cast brass
2	PowerPress adaptor	Carbon steel zinc nickel plated
3	PowerPress "O" ring	EPDM
4	Spacer ring	Stainless steel
5	Grab ring	Stainless steel
6	Visu-Control® ring	Polypropylene
7	Protection cap	Polypropylene
8	Union end cap	Carbon steel zinc nickel plated
9	PowerPress union tail	Carbon steel zinc nickel plated

See page 63 for further details.

heating

cooling

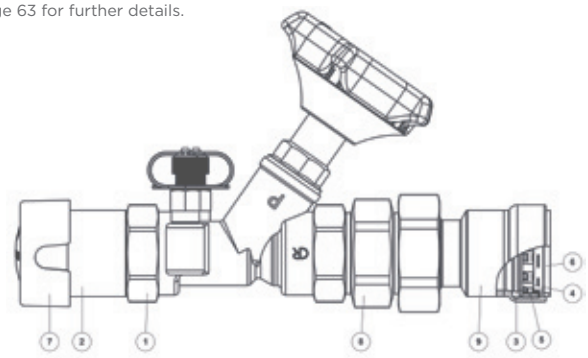

PP900 Static Balancing Valve PN16

specification

- venturi nozzle
- regulation, isolation and flow measurement
- setting scale precise and easy to read
- no change in setting when isolating
- easy identification of open or isolated position
- suitable for non potable water applications
- socket transport protection
- visual press indicators
- corrosion resistant

DN	Connection	Code	Total (kg)	Kv	Kvs
DN15 (LF)	½"	PWR9440629	0.59	0.629	0.359
DN15 (SF)	½"	PWR9440631	0.59	1.62	0.746
DN20 (SF)	¾"	PWR9440640	0.74	2.82	1.56
DN25 (SF)	1"	PWR9440651	1.02	7.54	2.95
DN32 (HF)	1 ¼"	PWR9440662	1.87	13.2	6.01
DN40 (HF)	1 ½"	PWR9440673	2.32	22	9.2
DN50 (HF)	2"	PWR9440684	3.33	36	17.1

	Metric			Imperial		
DN	Max Pressure (Bar)	Min Temp (°C)	Max Temp (°C)	Max Pressure (PSI)	Min Temp (°F)	Max Temp (°F)
DN15	16	-1	135	232	30	275
DN20	16	-1	135	232	30	275
DN25	16	-1	135	232	30	275
DN32	16	-1	135	232	30	275
DN40	16	-1	135	232	30	275
DN50	16	-1	135	232	30	275

See page 64 for further details.

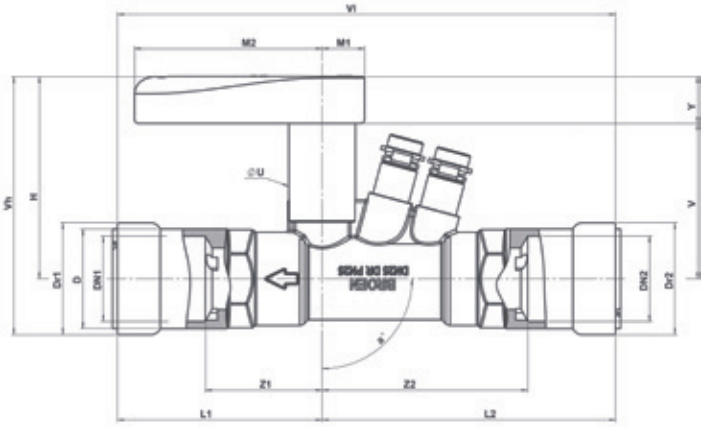

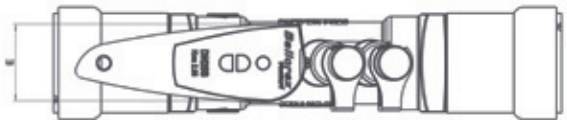

Size	L1	Z1	L2	Z2	DN1	Dr1	D	DN2	Dr2	U	a°	V	Y	H	M1	M2	E	Vh	Vl
½"	67	39	103	75	½"	32	28	½"	32	27	90	56	19	75	17	76	31.5	91	170
¾"	71	40.5	109	78.5	¾"	38	33	¾"	38	27	90	59	19	78	17	76	31.5	97	179.5
1"	83	47.5	119	83.5	1"	45	40	1"	45	27	90	63	19	82	17	76	31.5	105	202
1 ¼"	105	56.5	145	96.5	1 ¼"	56	49	1 ¼"	56	42.5	90	80.5	29.5	110	22.5	123	45	138	249.5
1 ½"	111.5	62.5	153.5	104.5	1 ½"	62	56	1 ½"	62	42.5	90	80.5	29.5	110	22.5	123	45	141	265
2"	121	68	163	110	2"	74	68	2"	74	42.5	90	90.5	29.5	120	22.5	123	45	157	284.5

	Litre/second		Litre/minute		Litre/hour	
DN	Min Flow	Max Flow	Min Flow	Max Flow	Min Flow	Max Flow
DN15 (LF)	0.0072	0.074	0.432	4.44	25.92	266.4
DN15 (SF)	0.036	0.148	2.160	8.88	129.60	532.8
DN20 (SF)	0.074	0.325	4.440	19.50	266.40	1170.0
DN25 (SF)	0.142	0.603	8.52	36.18	511.20	2170.8
DN32 (HF)	0.290	1.250	17.40	75.00	1044.00	4500.0
DN40 (HF)	0.440	1.880	26.40	112.80	1584.00	6768.0
DN50 (HF)	0.820	3.510	49.20	210.60	2952.00	12636.0

Nr	Component	Material
1	900 valve	DZR brass
2	'O' ring	EPDM
3	PowerPress valve adaptor	Carbon steel zinc nickel plated
4	PowerPress 'O' ring	EPDM
5	Spacer ring	Stainless steel
6	Grab ring	Stainless steel
7	Visu-Control® ring	Polypropylene
8	Protection cap	Polypropylene

See page 64 for further details.

heating cooling

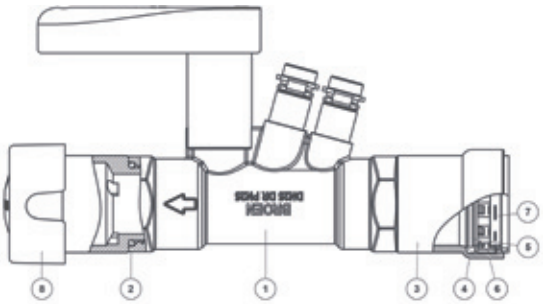

PPSU900 Static Balancing Valve PN16

specification

- venturi nozzle
- regulation, isolation and flow measurement
- setting scale precise and easy to read
- no change in setting when isolating
- easy identification of open or isolated position
- suitable for non potable water applications
- socket transport protection
- visual press and union indicators
- corrosion resistant

DN	Connection	Code	Total (kg)	Kv	Kvs
DN15 (LF)	½"	PWR9440695	0.80	0.629	0.359
DN15 (SF)	½"	PWR9440706	0.80	1.620	0.746
DN20 (SF)	¾"	PWR9440717	1.04	2.820	1.560
DN25 (SF)	1"	PWR9440728	1.52	7.540	2.950
DN32 (HF)	1 ¼"	PWR9440739	2.46	13.20	6.010
DN40 (HF)	1 ½"	PWR9440741	3.18	22.00	9.200
DN50 (HF)	2"	PWR9440750	4.74	36.00	17.100

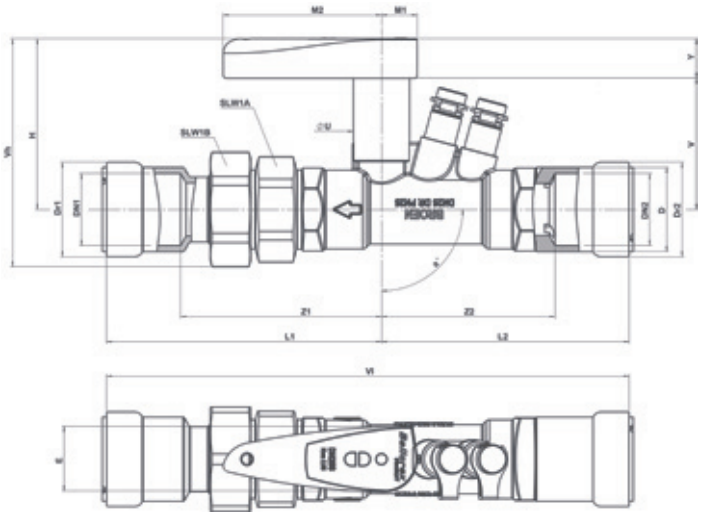

	Metric			Imperial		
DN	Max Pressure (Bar)	Min Temp (°C)	Max Temp (°C)	Max Pressure (PSI)	Min Temp (°F)	Max Temp (°F)
DN15	16	-1	135	232	30	275
DN20	16	-1	135	232	30	275
DN25	16	-1	135	232	30	275
DN32	16	-1	135	232	30	275
DN40	16	-1	135	232	30	275
DN50	16	-1	135	232	30	275

See page 65 for further details.

Size	L1	Z1	L2	Z2	DN1	Dr1	D	DN2	Dr2	U	a°	V	Y	H	SLW1A	SLW1B	M1	M2	E	Vh	Vl
½"	109.5	81.5	103	75	½"	32	28	½"	32	27	90	56	19	75	27	36	17	76	31.5	95	212.5
¾"	119.5	89.5	109	78.5	¾"	38	33	¾"	38	27	90	59	19	78	36	41	17	76	31.5	100.5	229
1"	132	96.5	119	83.5	1"	45	40	1"	45	27	90	63	19	82	46	50	17	76	31.5	109.5	251
1 ¼"	154	106	145	96.5	1 ¼"	56	49	1 ¼"	56	42.5	90	80.5	29.5	110	50	57	22.5	123	45	141.5	299
1 ½"	166.5	117.5	153.5	104.5	1 ½"	62	56	1 ½"	62	42.5	90	80.5	29.5	110	60	70	22.5	123	45	148.5	319.5
2"	189	136	163	110	2"	74	68	2"	74	42.5	90	90.5	29.5	120	75	85	22.5	123	45	167	352.5

	Litre/second		Litre/minute		Litre/hour	
DN	Min Flow	Max Flow	Min Flow	Max Flow	Min Flow	Max Flow
DN15 (LF)	0.0072	0.074	0.432	4.44	25.92	266.4
DN15 (SF)	0.036	0.148	2.160	8.88	129.60	532.8
DN20 (SF)	0.074	0.325	4.440	19.50	266.40	1170.0
DN25 (SF)	0.142	0.603	8.52	36.18	511.20	2170.8
DN32 (HF)	0.290	1.250	17.40	75.00	1044.00	4500.0
DN40 (HF)	0.440	1.880	26.40	112.80	1584.00	6768.0
DN50 (HF)	0.820	3.510	49.20	210.60	2952.00	12636.0

Nr	Component	Material
1	900 valve	DZR brass
2	"O" ring seal	EPDM
3	PowerPress valve adaptor	Carbon steel zinc nickel plated
4	PowerPress "O" ring	EPDM
5	Spacer ring	Stainless steel
6	Grab ring	Stainless steel
7	Visu-Control® ring	Polypropylene
8	Protection cap	Polypropylene

See page 65 for further details.

heating

cooling

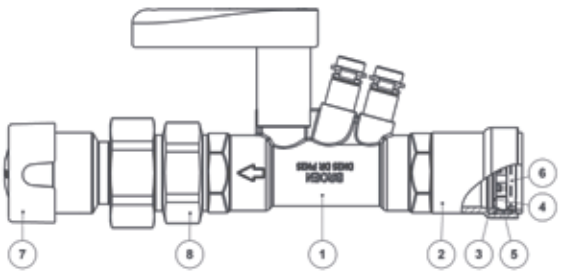

PP902 Dynamic Balancing Valve PN16

specification

- automatic balancing
- direct flow measuring of actual flow
- high flow accuracy
- easy system flushing due to removable cartridge
- suitable for non potable water applications
- socket transport protection
- visual press indicators
- corrosion resistant

DN	Connection	Code	Total (kg)	Kvs
DN15 (LF)	½″	PWR9440761	0.73	0.23
DN15 (SF)	½″	PWR9440772	0.72	0.78
DN15 (HF)	½″	PWR9440783	0.71	2.50
DN20 (SF)	¾″	PWR9440794	1.08	1.90
DN20 (HF)	¾″	PWR9440805	1.08	4.70
DN25 (SF)	1″	PWR9440816	1.64	5.05
DN25 (HF)	1″	PWR9440827	1.64	8.25
DN32 (HF)	1 ¼″	PWR9440838	2.33	8.35
DN40 (HF)	1 ½″	PWR9440849	4.29	17.50
DN50 (HF)	2″	PWR9440851	4.64	29.50

	Metric			Imperial		
DN	Max Pressure (Bar)	Min Temp (°C)	Max Temp (°C)	Max Pressure (PSI)	Min Temp (°F)	Max Temp (°F)
DN15	16	-10	110	232	-14	230
DN20	16	-10	110	232	-14	230
DN25	16	-10	110	232	-14	230
DN32	16	-10	110	232	-14	230
DN40	16	-10	110	232	-14	230
DN50	16	-10	110	232	-14	230

See page 66 for further details.

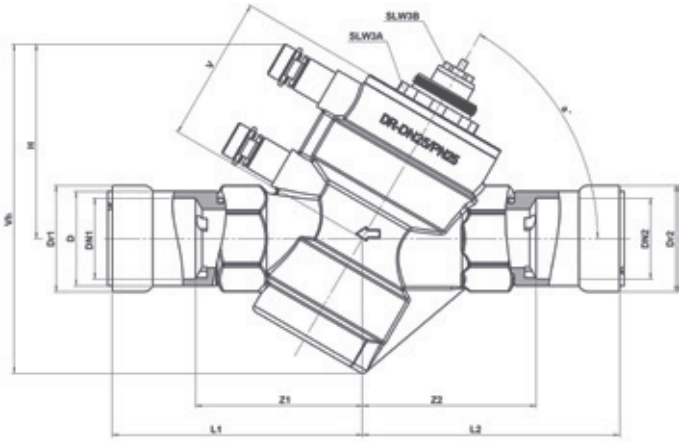

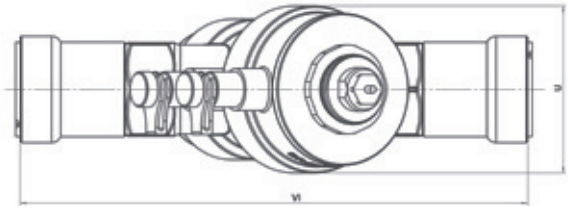

Size	L1	Z1	L2	Z2	DN1	Dr1	D	DN2	Dr2	U	a°	V	H	SLW3A	SLW3B	Vh	Vl
½″	84	56	87	59	½″	32	28	½″	32	43	60	51	74	37	13	111	171
¾″	104	73.5	96	65.5	¾″	38	33	¾″	38	54	45	56.5	78	37	13	126.5	199.5
1″	107	71.5	110	74.5	1″	45	40	1″	45	71	60	62	83	37	13	140.5	217
1 ¼″	136	87.5	138	89.5	1 ¼″	56	49	1 ¼″	56	81	60	64	88	37	13	165.5	273.5
1 ½″	157.5	108.5	157.5	108.5	1 ½″	62	56	1 ½″	62	110	60	91	120.5	37	13	210	314.5
2″	159.5	106	164.5	111	2″	74	68	2″	74	110	60	94	123	37	13	209	323.5

	Litre/second		Litre/minute		Litre/hour	
DN	Min Flow	Max Flow	Min Flow	Max Flow	Min Flow	Max Flow
DN15 (LF)	0.010	0.033	0.60	1.98	36.0	118.80
DN15 (SF)	0.025	0.125	1.50	7.50	90.0	450.00
DN15 (HF)	0.083	0.390	4.98	23.40	298.8	1404.00
DN20 (SF)	0.089	0.245	5.34	14.70	320.4	882.00
DN20 (HF)	0.232	0.617	13.92	37.02	835.2	2221.20
DN25 (SF)	0.240	0.650	14.40	39.00	864.0	2340.00
DN25 (HF)	0.485	0.925	29.10	55.50	1746.0	3330.00
DN32 (HF)	0.530	1.220	31.80	73.20	1908.0	4392.00
DN40 (HF)	1.020	2.100	61.20	126.00	3672.0	7560.00
DN50 (HF)	1.440	3.500	86.40	210.00	5184.0	1260.00

Nr	Component	Material
1	902 valve	DZR brass
2	'O' ring seal	EPDM
3	PowerPress valve adaptor	Carbon steel zinc nickel plated
4	PowerPress 'O' ring	EPDM
5	Spacer ring	Stainless steel
6	Grab ring	Stainless steel
7	Visu-Control® ring	Polypropylene
8	Protection cap	Polypropylene

See page 66 for further details.

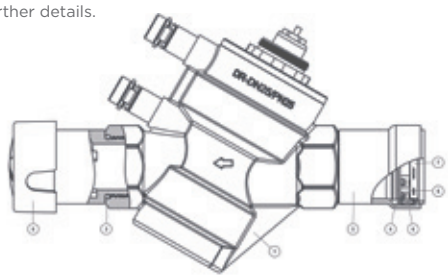

Actuators also available, on / off and modulating options

heating

cooling

PPSU902 Dynamic Balancing Valve PN16

specification

- automatic balancing
- direct flow measuring of actual flow
- high flow accuracy
- easy system flushing due to removable cartridge
- suitable for non potable water applications
- socket transport protection
- visual press and union indicators
- corrosion resistant

DN	Connection	Code	Total (kg)	Kvs
DN15 (LF)	½″	PWR9440860	0.94	0.23
DN15 (SF)	½″	PWR9440871	0.93	0.78
DN15 (HF)	½″	PWR9440882	0.92	2.50
DN20 (SF)	¾″	PWR9440893	1.38	1.90
DN20 (HF)	¾″	PWR9440904	1.38	4.70
DN25 (SF)	1″	PWR9440915	2.14	5.05
DN25 (HF)	1″	PWR9440926	2.14	8.25
DN32 (HF)	1 ¼″	PWR9440937	2.92	8.35
DN40 (SF)	1 ½″	PWR9440948	5.16	17.50
DN50 (HF)	2″	PWR9440959	6.05	29.50

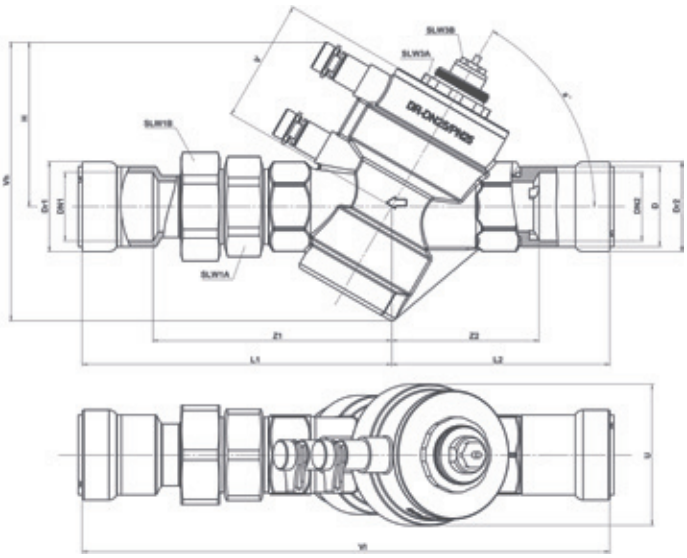

	Metric			Imperial		
DN	Max Pressure (Bar)	Min Temp (°C)	Max Temp (°C)	Max Pressure (PSI)	Min Temp (°F)	Max Temp (°F)
DN15	16	-10	110	232	-14	230
DN20	16	-10	110	232	-14	230
DN25	16	-10	110	232	-14	230
DN32	16	-10	110	232	-14	230
DN40	16	-10	110	232	-14	230
DN50	16	-10	110	232	-14	230

See page 67 for further details.

Size	L1	Z1	L2	Z2	DN1	Dr1	D	DN2	Dr2	U	a°	V	H	SLW1A	SLW1B	SLW3A	SLW3B	Vh	Vl
½″	126.5	98.5	87	59	½″	32	28	½″	32	43	60	51	74	27	36	37	13	111	213.5
¾″	153	122.5	96	65.5	¾″	38	33	¾″	38	54	45	56.5	78	36	41	37	13	126.5	249
1″	152	116.5	110	74.5	1″	45	40	1″	45	71	60	62	83	46	50	37	13	140.5	266
1 ¼″	185	137	138	89.5	1 ¼″	56	49	1 ¼″	56	81	60	64	88	50	57	37	13	165.5	323
1 ½″	212.5	163.5	157.5	108.5	1 ½″	62	56	1 ½″	62	110	60	91	120.5	60	70	37	13	210	369.5
2″	227	174	164.5	111	2″	74	68	2″	74	110	60	94	123	75	85	37	13	209	391.5

	Litre/second		Litre/minute		Litre/hour	
DN	Min Flow	Max Flow	Min Flow	Max Flow	Min Flow	Max Flow
DN15 (LF)	0.010	0.033	0.60	1.98	36.0	118.80
DN15 (SF)	0.025	0.125	1.50	7.50	90.0	450.00
DN15 (HF)	0.083	0.390	4.98	23.40	298.8	1404.00
DN20 (SF)	0.089	0.245	5.34	14.70	320.4	882.00
DN20 (HF)	0.232	0.617	13.92	37.02	835.2	2221.20
DN25 (SF)	0.240	0.650	14.40	39.00	864.0	2340.00
DN25 (HF)	0.485	0.925	29.10	55.50	1746.0	3330.00
DN32 (HF)	0.530	1.220	31.80	73.20	1908.0	4392.00
DN40 (SF)	1.020	2.100	61.20	126.00	3672.0	7560.00
DN50 (HF)	1.440	3.500	86.40	210.00	5184.0	1260.00

Nr	Component	Material
1	902 valve	DZR brass
2	'O' ring seal	EPDM
3	PowerPress valve adaptor	Carbon steel zinc nickel plated
4	PowerPress 'O' ring	EPDM
5	Spacer ring	Stainless steel
6	Grab ring	Stainless steel
7	Visu-Control® ring	Polypropylene
8	Protection cap	Polypropylene

See page 67 for further details.

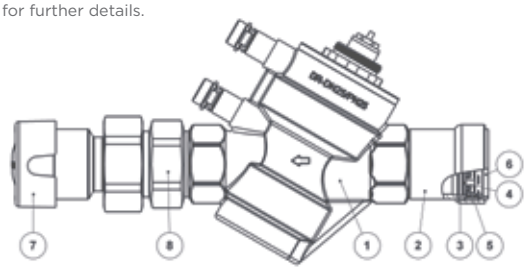

Actuators also available, on / off and modulating options

heating

cooling

PP1070 / 125 Gate Valve PN16

specification

- gunmetal body
- solid gunmetal wedge
- non rising stem
- gland packed
- suitable for non potable water applications
- socket transport protection
- visual press indicators
- corrosion resistant

DN	Connection	Code	Total (kg)	Kvs
DN15	½"	PWR9440365	0.48	14
DN20	¾"	PWR9440376	0.68	32
DN25	1"	PWR9440387	1.01	57
DN32	1 ¼"	PWR9440398	1.57	90
DN40	1 ½"	PWR9440409	2.07	129
DN50	2"	PWR9440411	3.08	230

	Metric			Imperial		
DN	Max Pressure (Bar)	Min Temp (°C)	Max Temp (°C)	Max Pressure (PSI)	Min Temp (°F)	Max Temp (°F)
DN15	16	-10	135	235	14	275
DN20	16	-10	135	235	14	275
DN25	16	-10	135	235	14	275
DN32	16	-10	135	235	14	275
DN40	16	-10	135	235	14	275
DN50	16	-10	135	235	14	275

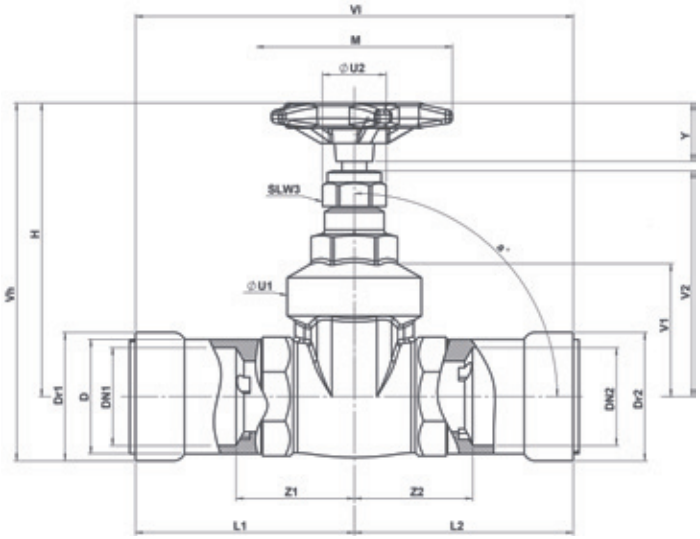

Size	L1	Z1	L2	Z2	DN1	Dr1	D	DN2	Dr2	U1	U2	a°	V1	V2	H	Y	SLW3	M	Vh	Vl
½"	64	36	64	36	½"	32	28	½"	32	32.5	22.5	90	32	58	84	17	20	60	100	128
¾"	68	37.5	68	37.5	¾"	38	33	¾"	38	39.5	22.5	90	39	68	94	18	20	60	113	135.5
1"	77.5	42	77.5	42	1"	45	40	1"	45	47.5	22.5	90	46.5	80	104	21	20	70	126	155
1 ¼"	96	48	96	48	1 ¼"	56	49	1 ¼"	56	56	28	90	55.5	92	119	21	25	75	147	192
1 ½"	100	51.5	100	51.5	1 ½"	62	56	1 ½"	62	64.5	28	90	65	109	147	26	25	95	178	200
2"	109	56	109	56	2"	74	68	2"	74	80.5	32.5	90	86.5	130	167	29	29	104	203	218

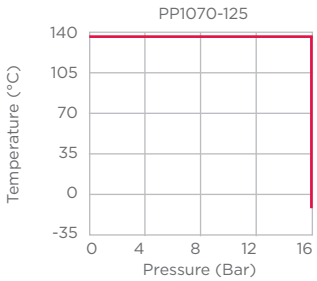

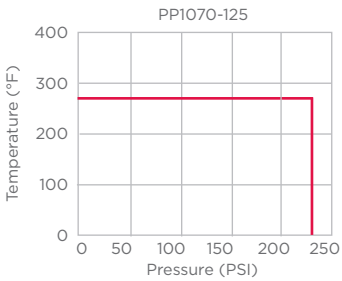

Nr	Component	Material
1	1070/125 Valve	Bronze
2	PowerPress valve adaptor	Carbon steel zinc nickel plated
3	PowerPress 'O' ring	EPDM
4	Spacer ring	Stainless steel
5	Grab ring	Stainless steel
6	Visu-Control® ring	Polypropylene
7	Protection cap	Polypropylene

heating

cooling

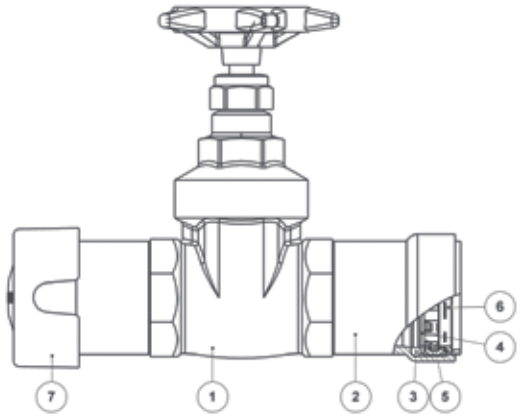

PPSU1070 / 125 Gate Valve PN16

specification

- gunmetal body
- solid gunmetal wedge
- non rising stem
- gland packed
- suitable for non potable water applications
- socket transport protection
- visual press and union indicators
- corrosion resistant

DN	Connection	Code	Total (kg)	Kvs
DN15	½"	PWR9440420	0.69	14
DN20	¾"	PWR9440431	0.98	32
DN25	1"	PWR9440442	1.51	57
DN32	1 ¼"	PWR9440453	2.16	90
DN40	1 ½"	PWR9440464	2.94	129
DN50	2"	PWR9440475	4.49	230

	Metric			Imperial		
DN	Max Pressure (Bar)	Min Temp (°C)	Max Temp (°C)	Max Pressure (PSI)	Min Temp (°F)	Max Temp (°F)
DN15	16	-10	135	235	14	275
DN20	16	-10	135	235	14	275
DN25	16	-10	135	235	14	275
DN32	16	-10	135	235	14	275
DN40	16	-10	135	235	14	275
DN50	16	-10	135	235	14	275

See page 68 for further details.

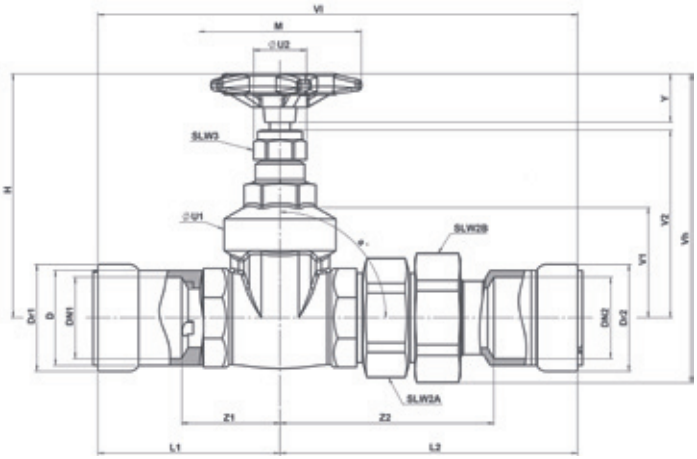

Size	L1	Z1	L2	Z2	DN1	Dr1	D	DN2	Dr2	U1	U2	a°	V1	V2	H	Y	SLW2A	SLW2B	SLW3	M	Vh	Vl
½"	64	36	106.5	78.5	½"	32	28	½"	32	32.5	22.5	90	32	58	84	17	27	36	20	60	103	170
¾"	68	37.5	117	86.6	¾"	38	33	¾"	38	39.5	22.5	90	39	68	94	18	32	41	23	60	117	185
1"	77.5	42	126.5	91	1"	45	40	1"	45	47.5	22.5	90	46.5	80	104	21	46	50	27	70	131	204
1 ¼"	96	48	145.5	97.5	1 ¼"	56	49	1 ¼"	56	56	28	90	55.5	92	119	21	50	57	30	75	150.5	242
1 ½"	100	51.5	155.5	106.5	1 ½"	62	56	1 ½"	62	64.5	28	90	65	109	147	26	60	70	32	95	185	255.5
2"	109	56	177	124	2"	74	68	2"	74	80.5	32.5	90	86.5	130	167	29	75	85	40	104	213	286.5

heating

cooling

Nr	Component	Material
1	1070/125 valve	Bronze
2	PowerPress adaptor	Carbon steel zinc nickel plated
3	PowerPress "O" ring	EPDM
4	Spacer ring	Stainless steel
5	Grab ring	Stainless steel
6	Visu-Control® ring	Stainless steel
7	Protection cap	Polypropylene
8	Union end adaptor	Carbon steel zinc nickel plated

See page 68 for further details.

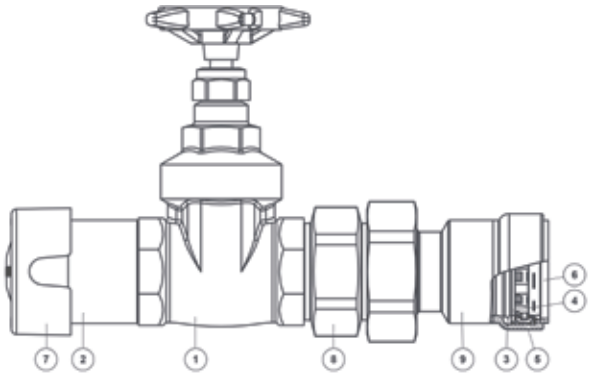

PP913 Strainer Valve PN16

specification

- high effective protection from system debris
- gunmetal body
- Y pattern
- stainless steel mesh
- suitable for non potable water applications
- socket transport protection
- visual press indicators
- corrosion resistant

DN	Connection	Code	Total (kg)
DN15	½"	PWR9440961	0.59
DN20	¾"	PWR9440970	0.74
DN25	1"	PWR9440981	1.02
DN32	1 ¼"	PWR9440992	1.87
DN40	1 ½"	PWR9441003	2.32
DN50	2"	PWR9441014	3.33

	Metric			Imperial		
DN	Max Pressure (Bar)	Min Temp (°C)	Max Temp (°C)	Max Pressure (PSI)	Min Temp (°F)	Max Temp (°F)
DN15	16	-10	120	232	14	248
DN20	16	-10	120	232	14	248
DN25	16	-10	120	232	14	248
DN32	16	-10	120	232	14	248
DN40	16	-10	120	232	14	248
DN50	16	-10	120	232	14	248

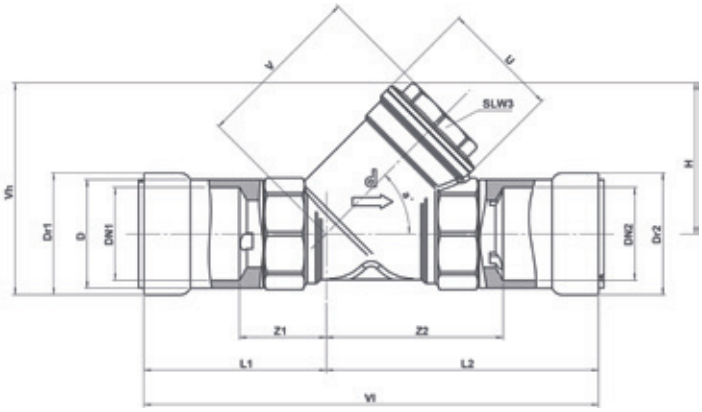

Size	L1	Z1	L2	Z2	DN1	Dr1	D	DN2	Dr2	U	a°	V	H	SLW3	Vh	Vl
½"	58.5	30.5	80	52.1	½"	32	28	½"	32	30.5	45	44.5	39.5	22	55.5	138.5
¾"	58	27.7	88.1	58	¾"	38	33	¾"	38	37	45	54	48	26	67	146.5
1"	68	32.5	101.5	66	1"	45	40	1"	45	44	45	63	56	32	79	169.5
1 ¼"	96	47.5	137.5	89	1 ¼"	56	49	1 ¼"	56	50	45	73	64.5	35	92.5	233
1 ½"	97	48	148	99	1 ½"	62	56	1 ½"	62	58.5	45	85.5	74.5	38	105	244.5
2"	101	48	164	110.5	2"	74	68	2"	74	35	45	106	91.5	45	129	265

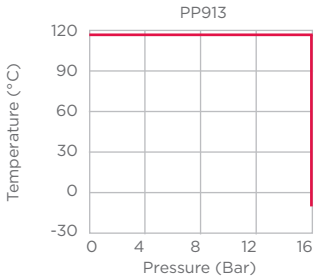

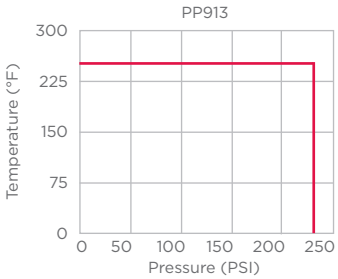

Nr	Component	Material
1	913 valve	Bronze
2	PowePress valve adaptor	Carbon steel zinc nickel plated
3	PowerPress 'O' ring	EPDM
4	Spacer ring	Stainless steel
5	Grab ring	Stainless steel
6	Visu-Control® ring	Polypropylene
7	Protection cap	Polypropylene

heating

cooling

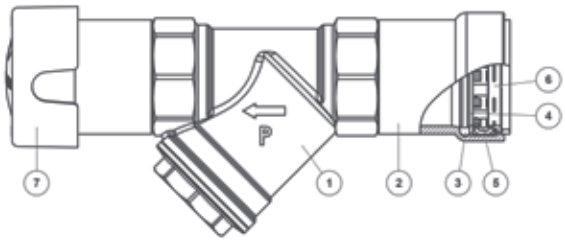

PP4426 Double Check Valve PN10

specification

- EN13959:2004 Type E D
- spring assisted closure
- suitable for non potable water applications
- works in all orientations
- socket transport protection
- visual press indicators
- corrosion resistant
- highly effective backflow prevention

DN	Connection	Code	Total (kg)
DN15	½"	PWR9440301	0.31
DN20	¾"	PWR9440310	0.46
DN25	1"	PWR9440321	0.76
DN32	1 ¼"	PWR9440332	1.17
DN40	1 ½"	PWR9440343	1.57
DN50	2"	PWR9440354	2.50

	Metric			Imperial		
DN	Max Pressure (Bar)	Min Temp (°C)	Max Temp (°C)	Max Pressure (PSI)	Min Temp (°F)	Max Temp (°F)
DN15	10	0	65	145	32	149
DN20	10	0	65	145	32	149
DN25	10	0	65	145	32	149
DN32	10	0	65	145	32	149
DN40	10	0	65	145	32	149
DN50	10	0	65	145	32	149

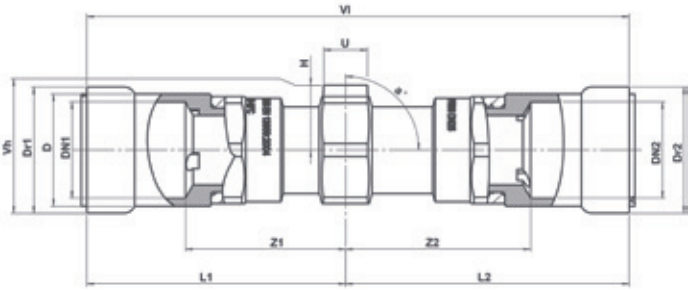

Size	L1	Z1	L2	Z2	DN1	Dr1	D	DN2	Dr2	U	a°	H	Vh	Vl
½"	75	47	81	53	½"	32	28	½"	32	16	90	17	33	156
¾"	82	51.5	90	59	¾"	38	33	¾"	38	16	90	20	38.5	171.5
1"	96.5	61	99	63.5	1"	45	40	1"	45	16	90	23.5	46	196
1 ¼"	121	73	126.5	78	1 ¼"	56	49	1 ¼"	56	16	90	27.5	56	247.5
1 ½"	136.5	80	138	80	1 ½"	62	56	1 ½"	62	16	90	30.5	62	274.5
2"	162.5	109	164.5	111	2"	74	68	2"	74	16	90	37	74	327

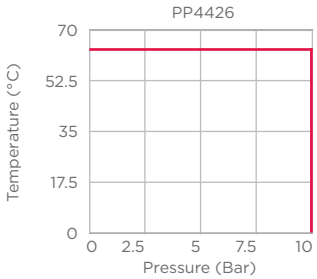

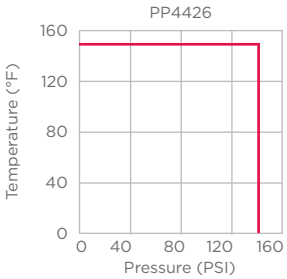

Nr	Component	Material
1	4426 Valve	DZR brass
2	PowerPress valve adaptor	Carbon steel zinc nickel plated
3	PowerPress 'O' ring	EPDM
4	Spacer ring	Stainless steel
5	Grab ring	Stainless steel
6	Visu-Control® ring	Polypropylene
7	Protection cap	Polypropylene
8	Vent	DZR brass

heating

cooling

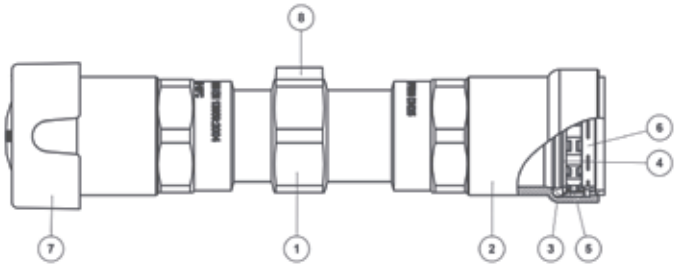

PP1060A Swing Check Valve PN16

specification

- bronze metal seated check valve
- horizontal fixing and vertical fixing, indicated by flow directional arrow
- suitable for non potable water applications
- socket transport protection
- visual press indicators
- corrosion resistant

DN	Connection	Code	Total (kg)	Kv	L/s
DN15	½″	PWR9440244	0.555	5.7	0.4
DN20	¾″	PWR9440255	0.835	15.3	1.0
DN25	1″	PWR9440266	1.208	25.3	1.0
DN32	1 ¼″	PWR9440277	1.837	32.6	1.0
DN40	1 ½″	PWR9440288	2.357	54.4	3.0
DN50	2″	PWR9440299	3.551	98.0	4.0

	Metric			Imperial		
DN	Max Pressure (Bar)	Min Temp (°C)	Max Temp (°C)	Max Pressure (PSI)	Min Temp (°F)	Max Temp (°F)
DN15	16	-10	135	232	14	275
DN20	16	-10	135	232	14	275
DN25	16	-10	135	232	14	275
DN32	16	-10	135	232	14	275
DN40	16	-10	135	232	14	275
DN50	16	-10	135	232	14	275

See page 69 for further details.

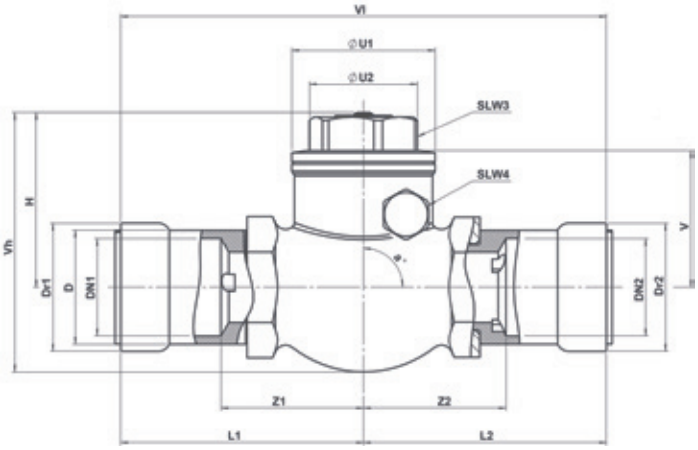

Size	L1	Z1	L2	Z2	DN1	Dr1	D	DN2	Dr2	U1	U2	a°	V	H	SLW3	SLW4	Vh	Vl
½″	69	41	69	41	½″	32	28	½″	32	40	29	90	35	46	26	13	68	138
¾″	78	47.5	78	47.5	¾″	38	33	¾″	38	48	35	90	42	54	31	14	81	156
1″	86	50.5	86	50.5	1″	45	40	1″	45	51	39.5	90	48.5	62	35	16	92	172
1 ¼″	106.5	58.5	106.5	58.5	1 ¼″	56	49	1 ¼″	56	57	43	90	54.5	68	38	16	103	213
1 ½″	116	67.5	116	67.5	1 ½″	62	56	1 ½″	62	65	50	90	62.5	77	43	16	120	229
2″	129	76	129	76	2″	74	68	2″	74	85	58	90	76.5	93	51	18	143	254

Nr	Component	Material
1	1060A Valve	Bronze
2	PowerPress valve adaptor	Carbon steel zinc nickel plated
3	PowerPress ‘O’ ring	EPDM
4	Spacer ring	Stainless steel
5	Grab ring	Stainless steel
6	Visu-Control® ring	Polypropylene
7	Protection cap	Polypropylene

See page 69 for further details.

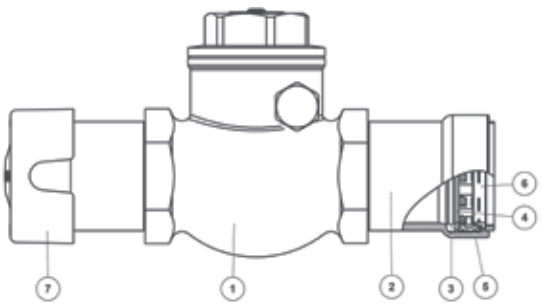

heating cooling

PP4 Pressure Reducing Valve PN16

specification

- allows high system pressures to be adjusted
- protects downstream, equipment
- nickel plated brass finish
- maximum inlet temperature 80°c
- suitable for non potable water applications
- socket transport protection
- visual press indicators
- corrosion resistant

DN	Connection	Code	Total (kg)
DN15	½"	PWR9441025	0.87
DN20	¾"	PWR9441036	1.34
DN25	1"	PWR9441047	1.67
DN32	1 ¼"	PWR9441058	2.85
DN40	1 ½"	PRW9441069	3.14
DN50	2"	PWR9441071	4.46

	Metric			Imperial		
DN	Max Pressure (Bar)	Min Temp (°C)	Max Temp (°C)	Max Pressure (PSI)	Min Temp (°F)	Max Temp (°F)
DN15	16	-10	80	232	14	176
DN20	16	-10	80	232	14	176
DN25	16	-10	80	232	14	176
DN32	16	-10	80	232	14	176
DN40	16	-10	80	232	14	176
DN50	16	-10	80	232	14	176

See page 70 for further details.

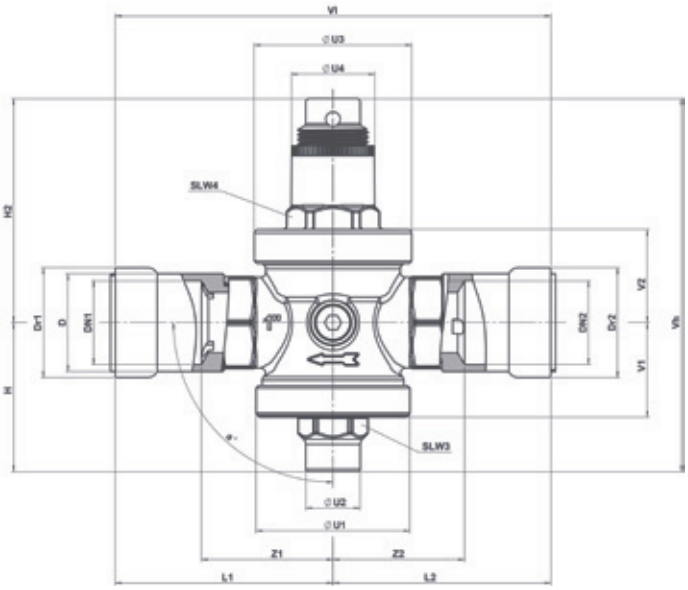

Size	L1	Z1	L2	Z2	DN1	Dr1	D	DN2	Dr2	U1	U2	U3	U4	a°	H	H2	SLW3	SLW4	V1	V2	Vh	Vl
½"	76.5	48.5	76.5	48.5	½"	32	28	½"	32	52	20	49.5	29	90	45	81	24	-	33	31.5	126	153
¾"	86	55.5	86	55.5	¾"	38	33	¾"	38	59.5	22	59.5	34.5	90	55	92	26	35	32.5	36	147	172
1"	90	54.5	90	54.5	1"	45	40	1"	45	63.5	22.5	65	34.5	90	61.5	92.5	26	35	39	38.5	154	180
1 ¼"	118	70	118	70	1 ¼"	56	49	1 ¼"	56	60	22.5	72	43	90	73.5	144	26	50	51	55.5	217.5	236
1 ½"	125	76	125	76	1 ½"	62	56	1 ½"	62	60	22.5	72	43	90	73.5	143	26	50	51	54.5	216.5	250
2"	135.5	82	135.5	82	2"	74	68	2"	74	70	43	72	43	90	84	152	38	50	60	64	236	271

Nr	Component	Material
1	PRV PT Valve	DZR brass
2	PowerPress valve adaptor	Carbon steel zinc nickel plated
3	PowerPress 'O' ring	EPDM
4	Spacer ring	Stainless steel
5	Grab ring	Stainless steel
6	Visu-Control® ring	Polypropylene
7	Protection cap	Polypropylene

See page 70 for further details.

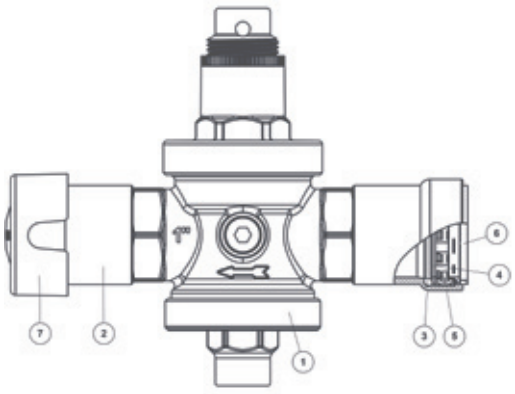

heating cooling compressed air

Pressure gauge also available, see pegler ref: 5A2003

VSH PowerPress® tools and accessories

P6100 Press tools Novopress

Article	Dimension	Article No.
ECO203 220V + case	½″ - 2″	39051
ACO203BT + 2 batteries + charger 220V + case	½″ - 2″	39070

P6101 Press jaws/-slings Novopress

Article	Dimension	Article No.
PB2 ECOTEC jaw - DW	½″	6360002
PB2 ECOTEC jaw - DW	¾″	6360013
PB2 ECOTEC jaw - DW	1″	6360024
ZB203 adapter	1″ - 2″	39190
Snap-on sling - DW	1 ¼″	6360035
Snap-on sling - DW	1 ½″	6360046
Snap-on sling - DW	2″	6360057
Set: case + snap-on slings	1 ¼″ + 1 ½″ - 2″ + ZB203	6360090
Set jaws ½″ - 1″ + case	½″ - 1″	6360167
Set jaws and slings ½″ - 2″ + ZB203 adapter + case	½″ - 2″	6360178

P6102 Case

Article	Dimension	Article No.
Case ECO/ACO203		6360134
Case Jaws + snap-on slings + adapter	½" - 2"	6360145

P6002 Battery + charger

Article	Article No.
Battery ACO203 1.5Ah 18V	39292
Battery ACO203 3.0Ah 18V	39293
Charger ACO203 UK	39296

VSH PowerPress®
technical support information

technical data

areas for using the VSH PowerPress system

central heating installation

VSH PowerPress fittings with steel pipes that fulfil EN 10220-1, EN10255, ASTM A53, A106, A135 or A795 (schedule 10 to 40) in closed loop systems.

O-rings:	EPDM (black)
Operating temperature:	-40°C to +135°C
Operating pressure:	Max. 16 bar

cooling water installations

VSH PowerPress fittings with steel pipes that fulfil EN 10220-1, EN10255, ASTM A53, A106, A135 or A795 (schedule 10 to 40) in closed loop systems.

O-rings:	EPDM (black)
Operating temperature:	-40°C to +135°C
Operating pressure:	Max. 16 bar

compressed air installations

VSH PowerPress fittings with steel pipes that fulfil EN 10220-1, EN10255, ASTM A53, A106, A135 or A795 (schedule 10 to 40) can be used for compressed air under the following conditions:

Water content:	max. 880 mg/m3, class 3, ISO 8573 part 1
Oil content:	max. 25 mg/m3, class 5, ISO 8573 part 1

Class	Water content (mg/m³)	Oil content (mg/m³)	O-ring
1	3	0.01	EPDM
2	120	0.1	EPDM
3	880	1	EPDM
4	6.000	5	EPDM
5	7.800	25	EPDM
6	9.400	>25	HBNR

Compressed air and iso classification - o-ring to be used.

The EPDM O-rings may only be used for synthetic oil or dry compressed air (not exceeding 25 mg/m3).

O-rings:	EPDM (black)
Operating temperature:	-40°C to +135°C
Operating pressure:	16 bar
Ball valves operating pressure	10 bar

Compressed air pipeline systems must be properly tested as soon as the installation work is finished. The system designer and installation contractor must ensure safe methods are selected for testing the system. The methods must comply with all current health and safety regulations.

They may include testing compressed air lines with fluids or compressed air at a specific pressure, or a combination of both. We recommend that the maximum working pressure of the product not be exceeded under any circumstances during this process. Since 30 May 2002, most pressure equipment and installations on the market have had to comply with the Pressure Equipment Directive (PED) 1999. The Directive concerns items such as vessels, pressurised storage containers, heat exchangers, steam generators, boilers, industrial piping, safety equipment and pressure accessories. Please note that Article 3(3) of the PED applies to VSH PowerPress. This means that only sound design and safe instructions for use and maintenance are required.

VSH PowerPress pipes

steel pipes for VSH PowerPress

VSH PowerPress fittings in the dimensions ½″up to 2″ are compatible with EN10220 series 1, EN10255 (formerly BS1387) and ASTM A53, A106, A135 and A795 black steel pipe. These pipes can be supplied as black steel, industrially painted, Galvanised or epoxy coated. Special care should be taken when installing coated pipes. This section gives you all technical parameters that are especially relevant when working with VSH PowerPress and steel pipes.

insulation

The following must be observed when insulating steel piping systems:

- cold water lines should be protected against condensation and overheating in accordance with DIN 1988, Part 200.
- hot water lines must be insulated to prevent heat loss in accordance with the Energy-Conservation Act (EnEG).

pipe surfaces

Pipe surfaces for each type of pipe must be smooth, free of indentations, pits and deformations and must be clean and free of debris, rust, scale, oil and grease.

It is not necessary to completely remove protective coatings or to expose the bare steel material. To avoid leak paths, engraved or stamped pipe shall not be used with the VSH PowerPress fitting system (removing the engraving or stamping through use of a grinder or other tool does not change this).

painted black (and lacquered) iron pipe

The pipes should be inspected for excessive paint runs. If excessive paint runs are existing, the surface of the pipe shall be smoothed by means of fine grit sand paper.

epoxy coated iron pipe

Epoxy coatings on black steel pipe have the tendency to increase the outer dimension of the pipe. The thickness of the coating should be reduced to allow the installation of the VSH PowerPress fitting. The maximum allowed thicknes of the epoxy coating is 300 µm. The surface of the pipe shall be smoothed by means of fine grit sand paper.

pipes according EN 10220

VSH PowerPress can be used in combination with EN 10220 pipe series 1. Series 2 and 3 are not released in combination with PowerPress.

		Outside diameter (mm)			
Size	DN		min.	max.	Wall thickness (mm)
½″	15	21.3	21.0	21.8	0.5 - 5.4
¾″	20	26.9	26.5	27.3	0.5 - 8.0
1″	25	33.7	33.3	34.2	0.5 - 8.8
1 ¼″	32	42.4	42.0	42.9	0.5 - 10.0
1 ½″	40	48.3	47.9	48.8	1.0 - 12.5
2″	50	60.3	59.7	60.8	1.0- 16.0

Pipes according EN 10220 (series 1).

pipes according EN 10255 (formerly BS1387)

VSH PowerPress can be used in combination with EN 10255 pipe. EN 10255 differentiates between heavy pipe series H and medium type L, L1 and L2. Within these series both longitudal welded as seamless pipe types exist.

		Outside diameter (mm)			Wall thickness serie H - heavy (mm)	Wall thickness serie M - middle (mm)
Size	DN		min.	max.		
½″	15	21.3	21.0	21.8	3.2	2.6
¾″	20	26.9	26.5	27.3	3.2	2.6
1″	25	33.7	33.3	34.2	4.0	3.2
1 ¼″	32	42.4	42.0	42.9	4.0	3.2
1 ½″	40	48.3	47.9	48.8	4.0	3.2
2″	50	60.3	59.7	60.8	4.5	3.6

Pipes according EN 10255 (series h and m).

Black steel

Galvanised steel

Epoxy coated

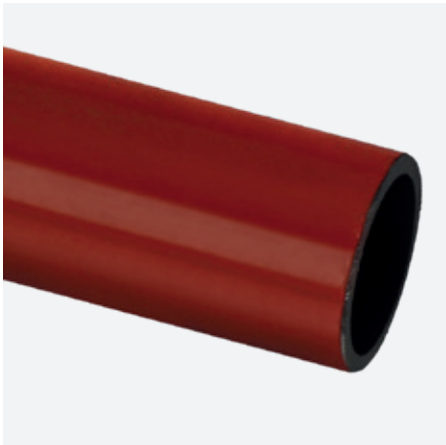

VSH PowerPress fittings

technical characteristics

VSH PowerPress FITTINGS are produced from St 35 steel and protected against corrosion by a zinc-nickel coating of 3-5 µm. The zinc-nickel coating provides protection to the exposure of condensation which can occur on cooling installations. The VSH PowerPress fittings are fitted with an EPDM O-ring.

threaded fittings

The VSH PowerPress product range also include components with inner and outer threads. VSH PowerPress fittings with inner and outer threads are manufactured in accordance with ISO 7/1 or ISO 228. With threaded couplings, we recommend that the sealing be executed before the pressing, in order not to stress the press connection.

VSH PowerPress fittings markings

VSH PowerPress fittings

	Marking	Packaging label
	Red Visu-Control® ring VSH PowerPress Dimension Traceabillity code Country of origin	Type Dimension Description EAN no. Art. no. Quantity

O-rings

The standard fittings are fitted with an EPDM profiled O-ring. The O-ring has been designed in such a way, that a leak tight connection is always guaranteed, even with uneven surfaces.

EPDM - black

	Temperature	Applications
	-40°C to +135°C Peak 150°C	For all installations for hot and cold water, circulation pipes, compressed air, etc.

VSH PowerPress 'Leak Before Press' function

VSH PowerPress are delivered with a 'Leak Before Press function' (LBP). Fittings with a Leak Before Press function have the advantage that connections that have not been pressed will leak water during pressure testing. This means that an incomplete press connection can easily be identified. If correctly assembled, the press fittings will be water and air tight after being pressed.

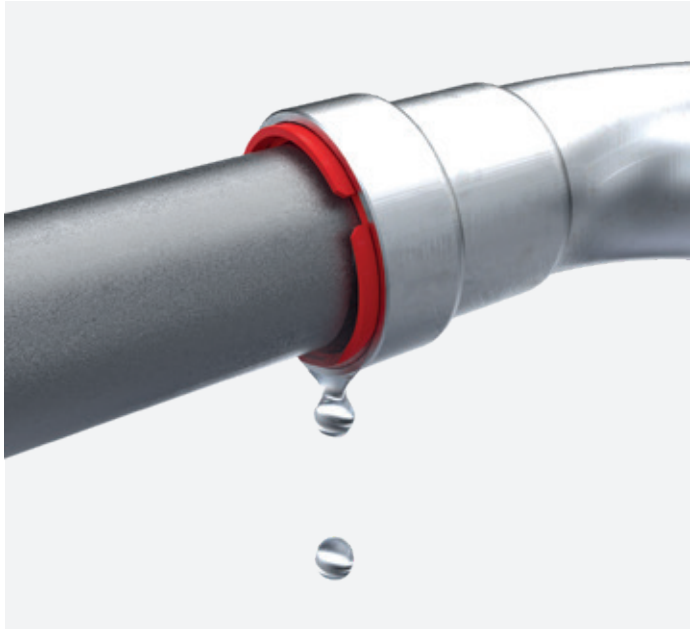

alternative VSH PowerPress applications

The choice of fittings and pipes depends on what the purpose of the system is, the medium and the operating conditions. Please contact us regarding approval for the use of VSH PowerPress fittings for applications other than for heating, cooling and compressed air. Installations must always comply with local regulations.

electrical heat tracing

VSH PowerPress may be used with electrical heat tracing in order to maintain the temperature of the piping. Sealed pipes must not be heated because of the danger posed by the excessive and inadmissible increase in pressure in the pipes.

(main) equipotential bonding

All metal piping systems using equipotential bonding must comply with equipotential bonding requirements. Continuity checks must be conducted by a qualified electrician in accordance with the regulations, once the installation work has been finished. VSH PowerPress in combination with the respective pipes are electrical conductive pipe systems due to the metal-to-metal contact between fitting and pipe and, therefore, must be included in the equipotential bonding.

Size	DN	Outside diameter (mm)	min.	max.	Wall thickness (mm)
½″	15	21.3	21.0	21.7	2.3
¾″	20	26.9	26.4	27.1	2.3
1″	25	33.7	33.2	34.0	2.9
1 ¼″	32	42.4	41.9	42.7	2.9
1 ½″	40	48.3	47.8	48.6	2.9
2″	50	60.3	59.6	60.7	3.2

Pipes according EN 10255 (series I and I1).

Size	DN	Outside diameter (mm)	min.	max.	Wall thickness (mm)
½″	15	21.3	21.0	21.3	2.0
¾″	20	26.9	26.4	26.9	2.3
1″	25	33.7	33.2	33.8	2.6
1 ¼″	32	42.4	41.9	42.5	2.6
1 ½″	40	48.3	47.8	48.4	2.9
2″	50	60.3	59.6	60.2	2.9

Pipes according EN 10255 (series I2).

pipes according ASTM

VSH PowerPress can be used in combination with ASTM A53, A106, A135 and A795 pipes. Within these series both longitudal welded as seamless pipe types exist.

NPS	DN	Schedule	Outside diameter (mm)	Wall thickness (mm)
½″	15	10	21.3	2.11
		40		2.77
¾″	20	10	26.7	2.11
		40		2.87
1″	25	10	33.4	2.77
		40		3.38

NPS	DN	Schedule	Outside diameter (mm)	Wall thickness (mm)
1 ¼″	32	10	42.2	2.77
		40		3.56
1 ½″	40	10	48.3	2.77
		40		3.68
2″	50	10	60.3	2.77
		40		3.91

Pipes dimensions according ASTM.

press tools

Press tools consist of a press machine and the corresponding press jaw or sling. The press machine can be either battery or electrically powered. The corresponding press slings must be used for each diameter of pipe in the system in order to achieve a perfect connection. The figure below shows a cross-section of the PowerPress profile before and after pressing.

All VSH PowerPress fittings with a diameter from ½″ to 2″ can be pressed using the appropriate press tools listed in our product range. You must use the DW-profile that correspond to the diameter to be installed of the VSH PowerPress system (VSH XPress and VSH SudoPress jaws and slings can not be used for VSH PowerPress). A special adaptor may also be required in addition to the press slings.

We guarantee an excellent press connection, provided the tools are used correctly.

Before pressing

After pressing

maintenance and correct usage of press tools

Correct pressing with the VSH PowerPress systems is guaranteed when the press tools listed in the tables 2.4.1 are used correctly. Regular maintenance and lubrication of the press jaws, slings and tools is necessary. Please observe the manufacturer's instructions for use and maintenance. Badly maintained and/or damaged press jaws pose a potential risk.

press tools approval for VSH PowerPress fittings

Size	Make	Press tool	Press jaws/slings
½″ 2″	Novopress	ECO1 Pressboy (230V) ECO20½02/203 (230V) ACO1 Pressboy (12V) ACO201 (14.4V) ACO202/203 (18V) EFP2 (230V) EFP20½02/203 (230V) AFP20½02 (14.4V) ACO202/203(XL) (18V)	VSH PowerPress DW-profile jaws or Novopress jaws: ½″- 1″ Slings: 1 ¼″ - 2″ with adapter ZB203
½″ 2″	Milwaukee	M18 (18V)	Milwaukee M18 jaws: ½″ - 1″ Milwaukee M18 Slings: 1 ¼″ - 2″ with adapter ZB203
½″ 2″	Ridgid	RP10-S (230V) RP10-B (12V) RP330C/330B RP340C/340B	Viega jaws: ½″ - 1″ (4299.9) Viega slings: ½″ ¾″ with adapter Z1 Viega slings: 1 ¼″ - 2″ with adapter Z2
½″ ¾″	Viega	Picco (18V) Pressgun Picco (18V)	Viega jaws: ½″ - ¾″ (4284.9) Viega slings: ½″ ¾″ with adapter P1
½″ 2″	Viega	PT3-EH (230V) PT3-AH (12V) Pressgun 4E (230V) Pressgun 4B (18V) Pressgun 5	Viega jaws: ½″ - 1″ (4299.9) Viega slings: ½″ ¾″ with adapter Z1 Viega slings: 1 ¼″ - 2″ with adapter Z2
½″ ¾″	Nussbaum	Pressgun Picco (18V)	Viega jaws: ½″ - ¾″ (4284.9) Viega slings: ½″ ¾″ with adapter P1
½″ 2″	Nussbaum	Type 2 Type 3 Type 5A Type 5 Type 6	Viega jaws: ½″ - 1″ (4299.9) Viega slings: ½″ ¾″ with adapter Z1 Viega slings: 1 ¼″ - 2″ with adapter Z2

Press tools approved for VSH PowerPress.

installation guidelines

When installing VSH PowerPress always make sure to take proper care in using protective gear on the building site. Safety shoes, hat and glasses should be the minimum of protection when installing VSH PowerPress.

1. transport and storage

When transporting and storing VSH PowerPress fittings or valves, damage and contamination must be avoided. The optimal storage temperature for the fittings is between 10°C and 25°C. The products must be stored in a dry place (max. humidity 65%) in their original packaging. It is advised to not remove the product from the bag before installing.

2. cut the pipe to length

After measuring, the pipes can be cut to length using a pipe cutter, a fine-toothed handsaw or an electrical mechanical saw suitable for the pipe material. The pipe must always be cut completely through. Never partially cut the pipe and break it off as this could cause leakage. When cutting already installed pipes, always take into account a minimum distance to weldings and bends of 3 x d (but minimal 100 mm).

Do not use oil-cooled saws, grinding wheels or flame cutters.

3. deburring the pipe

Pipe ends must be carefully and thoroughly deburred in- and outside after being cut to length in order to avoid damage to the O-ring when inserting the pipe into the press fitting. A file or hand deburrer or an electrical pipe deburrer suitable for the material may be used to deburr both inside and outside of the pipe. Burrs sticking to the pipe must be removed.

4. cleaning the outside of the pipe

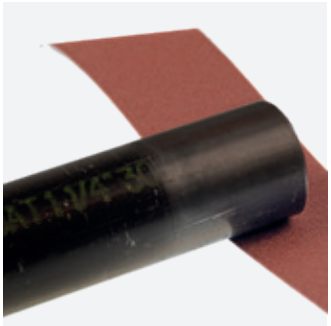

Always ensure that any dirt, scale, excessive paint or corrossion particles are removed from the surface of the pipe. This can be done with a wire brush or fine grit sand paper.

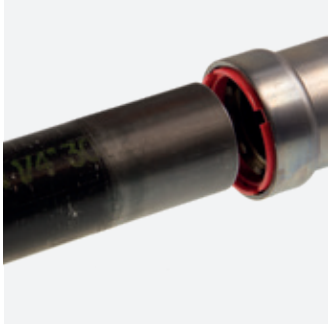

The pipe surface of the pipe must be smooth, free of indentations, pits and deformations and must be free of oil and grease.

5. marking insertion depth

The required insertion depth must be marked on the pipe or the press fitting (the latter for fittings with pipe ends) in order to guarantee a safe and proper joint. The pressing operation behind the bead is of crucial importance for the tensile strength.

The marking on the pipe must remain visible (but close to the fitting) after the connection is pressed to identify any movement before or after pressing.

6. check the fitting and pipe

Before assembly, the protective cap has to be taken from the fitting after which the fitting must be checked to ensure that the O-rings are present and correctly positioned. Pipe, fitting and O-ring must be examined for any foreign materials (e.g. dirt, burrs), which must be removed, if present. Please make sure that the Visu-Control® ring is properly aligned before pressing.

7. assembly of fitting and pipe

Insert the pipe carefully into the press fitting up to the marked insertion depth, without tilting, pushing it in the direction of the axis. The insertion depth marking must remain visible. In the case of fittings without a stop the fittings should be inserted at least as far as the marked insertion depth. Rough and careless insertion of the pipe into the press fitting may result in damage to the O-ring and is therefore not permitted.

If assembly is difficult because of the permitted tolerances in size, a lubricant, such as water or soap, may be used. Under no circumstances may oils, fats or grease be used as lubricants.

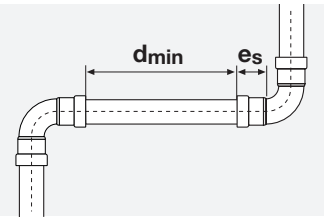

To optimise the installation time, time may be saved by first assembling a number of connections and then pressing the various pipe connections one after the other.

Marking the distance (dmin) provides a check that the pipe has not been pushed out of the fitting during the pressing process. Before starting the final pressing process of the various pipe connections, it is also important to check the minimum required distances for the installation (see table).

Outside Ø	Insertion depth es (mm)	Minimum distance d_{min} (mm)	Minimum pipe length 2 x es + d_{min} (mm)
½″	28	5/15	61/71
¾″	31	5/15	67/77
1″	36	5	77
1 ¼″	48	10/15*	106/111*
1 ½″	49	10/15*	108/113*
2″	53	10/15*	116/121*

*Minimum distances between pressings (*for slings).*

The table below gives the minimum required working space so that the pressing of the fittings can be carried out correctly using the appropriate press tools. These distances relate to the general installation configurations that are schematically depicted in figures 1, 2 en 3.

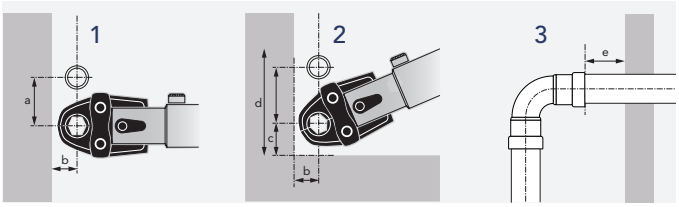

	Fig. 1		Fig. 2			Fig. 3
Outside Ø	a	b	d	b	c	e
½″	70/75	30/60	80/75	35/60	50/80	50/20
¾″	80/85	35/65	90/85	40/65	55/80	50/20
1″	95	45	105	50	65	50
1 ¼″	125*	95*	125*	95*	80*	20*
1 ½″	135*	105*	135*	105*	80*	20*
2″	140*	105*	140*	105*	80*	20*

*Space needed for installation (*for slings).*

pressing

Before starting to press, the press jaws and slings must be checked for dirt, which must be removed if present. Furthermore, the press machine must be in good condition and the instructions for operating the device, maintenance and the manufacturer's instructions must be observed.

In order to create a correctly pressed connection, the groove of the press tool must enclose the press fitting O-ring bead. Once the pressing has started, always complete the press cycle and under no circumstances interrupt the process. The approved machine, press jaws and press slings are shown on our online tool selector: **www.vsh.eu/presstool**.

it is not permitted to press a connection more than once

The pressing process can cause deflection (angular displacement). This behaviour can be corrected by alternating the position of the press tool/jaw on each connection. As an example you could choose to place the machine first left, then for the next connection the machine would be placed on the right side. The deflection of the joint is not something which can be prevented, but it can be minimized using the above method.

corrosion protection

In the case that VSH PowerPress fittings are used in an application where a full corrosion protection is needed (such as cooling installations), always take care to protect the cleared pipe surface which was made for the installation procedure.

general installation information

thermal expansion (in the piping system)

The level of thermal expansion within piping systems depends on the type of materials used. This linear expansion needs to be taken into account during the installation. Small changes in length can be accommodated by having adequate space for expansion as well as by the elastic properties of the piping system itself. More substantial changes in length need to be offset by other means; e.g. installation of special expansion compensation devices, fixed anchoring points and brackets.

Expansion can be offset by the use of a pipe segment, U-bend or compensators. The level of expansion to be offset can be determined beforehand by calculating the changes in length.

The equation for calculating the changes in length is as follows:

$$\Delta l = l \times \alpha \times \Delta T$$

Δl = total linear expansion [mm]
l = length of the segment in question [m]
ΔT = temperature difference [K]
α = linear expansion coefficient

pressure drop

Every fluid that flows through a piping system experiences continuous and local flow resistances, the so-called pressure drops. There is a difference between the continuous and the local pressure drop. A continuous pressure drop is mainly caused by the flow resistance in straight pipe sections, which essentially is a result of the friction between the fluid and the pipe wall. Local pressure drops, on the contrary, are those flow resistances that are created by, for instance, a change in the internal pipe diameter, a pipe branch, an elbow, etc.

continuous pressure drop

To calculate the resistance of a fluid flow in a straight section of a piping system, first determine the resistance in a unit of length and then multiply the total length by this value. This value can be determined analytically using the Hazen-Williams formula.

$$p = \frac{6{,}05 \times 10^5}{C^{1{,}85} \times di^{4{,}87}} \times Q^{1{,}85}$$

p = pressure drop in the pipe [bar/m]
Q = flow through the pipe [l/min]
di = mean internal diameter of the pipe [mm]
C = constant for type and condition of the pipe

If you wish to perform these calculations, please consult the relevant specialised literature.

local pressure drops

A local pressure drop is, as mentioned at the start of this section, the resistance to flow that results from changes in the flow direction and cross-sectional area, flow splitting over several channels, etc. There are, in general, two ways of calculating such flow resistances: the direct analytical method and the method that uses 'equivalent lengths'.

equivalent length method

This method assumes that the pressure drop at a particular point can be considered to be the same as an equivalent increase in the length of a straight piping system with the same internal diameter. The final result is a pressure drop that is equal to the real pressure drop. In other words, the actual length of the piping system is added to all the equivalent lengths of the individual joints (see below).

The actual length is then multiplied by the pressure drop per unit-length in order to be able to calculate the total pressure drop of the system. This method is not as accurate as the direct method but has the advantage that the calculation can be carried out faster.

ζ direct analytical method / equivalent length method (m)

OD	DN	ζ	(m)	ζ	(m)	ζ	(m)	ζ	(m)	ζ	(m)	ζ	(m)
¾″	20	0.61	0.37	0.51	0.32	0.38	0.24	0.96	0.59	0.32	0.20		
1″	25	0.64	0.53	0.54	0.46	0.42	0.35	1.06	0.89	0.29	0.24	0.32	0.20
1 ¼″	32	0.51	0.62	0.38	0.47	0.32	0.39	0.93	1.13	0.26	0.31	0.35	0.29
1 ½″	40	0.45	0.65	0.32	0.47	0.29	0.42	0.83	1.22	0.22	0.33	0.26	0.31
2″	50	0.48	0.94	0.35	0.69	0.29	0.57	0.93	1.82	0.22	0.44	0.26	0.38

Table with equivalent lengths and zeta values of local pressure drops.

direct analytical method

The local pressure drop can be calculated using the following equation:

$$\Delta p_L = \sum\zeta \times v2 \times \gamma/2 \times 10^{-5} \text{ [bar]}$$

v = flow velocity of the fluid [m/s]
γ = specific density of the fluid [kg/m³]
ζ = local flow resistance coefficient

The table on the previous page gives the zeta [ζ] values for each type of fitting. We can assume that zeta [ζ] is velocity-independent for those velocities that occur in domestic installations or in other normal applications; this is supported by the fact that the change in zeta [ζ] as a function of the Reynolds number in these velocity ranges is only minimal. Once the zeta [ζ] value is known, you can read the corresponding local pressure drop off directly.

heat losses

Just as with all other types of pipes made from metal or synthetic materials, adequate measures must be taken to limit heat losses. Please consult the relevant regulations on minimum insulation thicknesses and the insulation standards.

built-in

welding requirement

The following requirements have to be considered when welding in the same vicinity as VSH PowerPress fittings.

welding adjacent to already installed VSH PowerPress fittings

When welding adjacent to an installed VSH PowerPress connection, the installer must remain at least 100 mm away from the connection to prevent damage to the O-ring. The installer should take the following precautions to keep the VSH PowerPress connection cool while welding:

- wrap the connection with a cold wet rag
- protect the connection with a weld blanket
- fabricate weld connections prior to installing the pressed fitting (make sure the pipe has cooled before installing the fitting)
- consistently apply 'spray type' spot freezing

welding inline with installed VSH PowerPress fittings

When welding inline to an installed VSH PowerPress fitting, the installer must remain at least 90cm away from the connection to prevent damage to the O-ring. The installer should take the following precautions to keep the VSH PowerPress connection cool while welding:

- wrap the connection with a cold wet rag
- protect the connection with a weld blanket
- fabricate weld connections prior to installing the pressed fitting (make sure the pipe has cooled before installing the fitting)
- consistently apply 'spray type' spot freezing

guidelines for distances of mounting brackets

Always make sure to have hangers and supports conform to the local requirements. All parts of the hangers and supports must be designed and installed in such a manner that they support the piping. Always make sure to place sliding hangers in such a way that they don't become rigid hangers by accident.

Ø Pipe diameter [mm]	Max. distance [m]
½″	2.75
¾″	3.00
1″	3.50
1 ¼″	3.75
1 ½″	4.25
2″	4.75

Distances between mounting brackets in accordance with EN 806, part 4.

Observance of the above distances between attachment points is not sufficient in itself. Heat expansion also needs to be appropriately compensated for in horizontal stretches and, therefore, the distances above may need to be adjusted.

mounting pipes

When securing the pipes, the following must be borne in mind: The load-bearing capacity of the mounting brackets must correspond to the weight of the pipelines and also withstand expansion and torsion forces. Mounting brackets, such as fixed mounting points and clips, must therefore be correctly placed and assembled.

Attachment points may only be fitted onto straight pipe sections. Mounting directly onto fittings is not allowed.

pressure test

As soon as a piping system has installed, it must be checked for leaks before being covered up and concealed. With heating and cooling installations, the pressure test can be carried out with water, air or inert gases. The test medium and the results of the pressure test must be documented in a so-called pressure test report.

IMPORTANT:
VSH PowerPress stresses that a pressure test of the piping system must be carried out in all cases. Before being covered up, insulated, painted or walled in, a piping system must first undergo a pressure test in order to be certain that there are no leaks. Pressure tests must always be performed in accordance with local regulations. As a rule of thumb, a pressure of 1.5 times the operating pressure is used for pressure tests with water.

IMPORTANT:
When testing an VSH PowerPress installation, make sure that no water remains in the system afterwards, in order to avoid the risk of corrosion, unless the system is going to be put into service shortly afterwards.

pressure test for heating systems and cooling systems

IMPORTANT:
As a rule, the pressure test for piping that has already been laid is carried out with water in accordance with DIN-VOB 18380.

- The test pressure at each point of the system must be 1.3 times the operating pressure and at least 1 bar overpressure.
- Immediately after the cold water pressure test, the water must be heated up to the highest hot water temperature on which the calculations were based in order to be certain that the system remains tight at high temperatures.
- During the test there must be no drop in pressure.
- The pressure test must be adequately documented.

pressure test with air

IMPORTANT:
The pressure test with air or inert gases can be carried out in accordance with the ZVSHK/BHKS technical bulletins, "Pressure Test with Air or Inert Gases", (at 100 l pipe capacity a leak tightness test at 110 mbar for at least 30 minutes. For every additional 100 l, the time must be increased by 10 minutes. After the leak tightness test, the strength of the connection is to be tested during 10 minutes at: a maximum of 3 bars up to DN50, maximum of 1 bar >DN50). For safety reasons, the maximum test pressure is set at 3 bars.

flushing the network

Each piping system must be flushed thoroughly before being put into use so that any foreign matter is removed from the inside of the pipe surface and so that hygiene problems and corrosion damage are largely prevented. In exceptional cases, it may be necessary to flush the system with a disinfecting substance. When flushing with a disinfectant substance, special care must be taken to ensure that no chlorides remain on the inside of the pipes. Always make sure to flush with clean potable water.

corrosion

There are different kinds of corrosion: chemical corrosion, electro-chemical corrosion, internal and external local corrosion, stray current corrosion, etc. All these kinds of corrosion have very particular chemical or mechanical causes. The following paragraphs provide some simple hints on how to avoid such problems.

electro-chemical corrosion

Electro-chemical corrosion occurs under the following circumstances:

- an electrochemical potential difference between both parts
- the presence of a conductive fluid (electrolyte), such as water
- the presence of oxygen (O_2)

A distinction must be made between heating installations and water supply installations. There are no significant amounts of oxygen in heating installations, when they are properly installed and operated and there will thus be very little corrosion. In water installations, however, the oxygen content is very high, nearly at the saturation point. It is of primary importance that the VSH PowerPress System components be installed only downstream of other, metallurgically inferior (less noble), components that are possibly present in these kinds of installations. For example, it is possible to install branches with VSH XPress stainless steel pipes from a pipe system consisting of Galvanised steel pipes. In such a case, a non-ferrous metal or synthetic connection piece must be used (see DIN1988).

Another important factor is the ratio between the surface of the noble metal and that of the less noble metal. The higher this ratio, the greater the corrosion rate may be. It is, therefore, recommended that you avoid, as far as possible, using extensions or connection pieces of Galvanised steel and instead stainless steel or brass fittings.

stray currents

Corrosion by stray currents rarely occurs in practice and is immediately recognisable as it starts on the outside of the pipe with a cone-shaped crater to the inside. Stray current corrosion requires a direct current that turns the metal into an anode. The current, which in practice and despite insulation measures penetrates into the earth and from there goes into other neighbouring metal structures, such as a water supply installation, runs through a particular stretch of the system before it returns to earth again. In order to penetrate into the piping system, the earth current must have an entry point at a spot where the normal protective cover of the pipe or connection is damaged or missing.

For this reason, metal pipelines must be earthed (see EU Regulations). Direct current installations are generally not used in domestic households and no real problems occur with alternating current. Research over decades has shown that problems by stray currents only occur sporadically and do not depend on the type of metal.

steel pipes

internal corrosion
Internal corrosion cannot occur with closed-loop water heating systems. The oxygen in the water in closed-loop systems creates a layer of iron oxide on the inside of the pipe thereby preventing any further corrosion. When the heating system is not in use, it must be kept filled at all times or, alternatively, be completely drained and subsequently dried out, to avoid the presence of water and oxygen in the system at the same time.

The necessary additives should be added to prevent frost damage, calcification or corrosion. We are always happy to answer enquiries about the use of additives. Please observe the applicable legislation, regulations and local rules regarding corrosion.

external corrosion
Steel pipe systems are generally installed in such a way that the outer surfaces do not come into contact with corrosive media. If they do come in contact with corrosive media, approriate measures should be taken.

prevention of corrosion
Instructions will be found in the following paragraphs on how to prevent corrosion problems in the most usual places. A distinction is made between inner and outer corrosion, and the area of application. We shall also examine the various application possibilities of various materials that can be combined in an installation (combi-installations).

internal corrosion

heating installations
The penetration of oxygen in closed-loop heating installations will be prevented if high-quality accessories and compensators with closed membranes are used. When filling the installation, the small quantity of oxygen contained in the water is directly absorbed into the inner pipe surface, in the process of which a thin layer of iron oxide is formed and after which there is no longer any possibility of corrosion. The loss in wall thickness can be disregarded. The heating-circuit water is practically oxygen-free after this reaction.

steel pipes
Internal corrosion is normally impossible in closed-loop heating installations with VSH PowerPress fittings as oxygen from outside cannot penetrate the installation.

water additives
Oxygen scavengers and corrosion inhibitors can be added to the heating-circuit water as a preventive measure against inadmissible oxygen absorption. Observe the supplier's instructions for use.

(potable) water installations
(galvanised) steel
Galvanised Steel pipes and fittings are not permitted in potable water installations. Contact corrosion will occur with Galvanised steel if it enters into direct contact with stainless steel.

external corrosion

general
There are few situations in which outer corrosion occurs in buildings. It is, however, possible in many cases that installations are exposed for a longer period to undesired penetration of rain, humidity or dampness and this can lead to problems. Responsibility for taking relevant measures rests, however, with the user and the installer. Only suitable corrosion protection can offer permanent certainty against corrosion. One way of doing so is to use 'closed cell' insulation, which must be applied in a guaranteed waterproof condition.

Suitable primers - or metallic paints may offer minimal corrosion protection. It is advisable to always use corrosion protection on the piping in situations where corrosion is likely to occur (damp room, crawl spaces, etc.).

steel

Special attention must be paid to preventing outer corrosion where an environment remains humid for longer periods. Only in cases of sporadic short-term corrosion stress caused by humidity will Galvanised Steel also be resistant against corrosion for a longer period. VSH PowerPress fitting connections must be protected in cases of increased risk of corrosion due to electrolytic outer corrosion (or longer periods of humidity) in a manner satisfactory to the local regulations.

Care should be taken to select hangers of suitable material that is galvanically compatible with the piping system. In addition, piping systems should be properly sized to minimise the risk of erosion corrosion resulting from excessive velocities.

impact of application and processing

heat transfer (e.g. with a heating band)

Heat transfer from outside inwards must be prevented as this can lead to the build-up of film on the inside of the pipe wall. This film can cause an increase in the concentration of chloride ions, which cause pitting in critical concentrations.

underground installations

VSH PowerPress fitting systems and black iron pipe are approved for underground installations. However, any installations must meet all local codes, including those for underground. Proper authorisation must be obtained prior to underground installation from the local authority having jurisdiction.

galvanised steel

With Galvanised steel, waterline corrosion can occur as a result of interaction between three actors (water - metal - gas (air). This corrosion can be prevented if the piping installation remains permanently filled once filled for the first time. Partial filling will take place, for example, if the pipes are emptied again after a pressure test with water, in which case a pressure test using gas/air is to be recommended.

effect of insulation

general

Insulation does not, as a rule, offer any protection against corrosion except in the case of ‘closed cell insulation’ (sealed watertight), which offers effective protection against corrosion. The installation instructions of the supplier of the insulation material must always be followed carefully. Remove dust, dirt, oil or water from the piping prior to insulating.

The different sections of the insulation material must be carefully joined, taking care that no moisture or water can enter the material.

Also take care that the water barrier of the insulation material is not damaged during installation as moisture could otherwise penetrate under the insulation material.

insulating galvanised steel

No corrosion can occur if there is no humidity between the insulation material and the pipe. If there is a possibility of humidity (condensation) occurring under the insulation, the outside of the pipe will corrode.

VSH PowerPress® additional technical information

components, materials and characteristics

PP550 Ball Valve PN16

further details

Nr.	Component	Material
1	Body	DZR brass CW511L
2	Cap	Carbon steel zinc nickel plated
3	Handle	Mazak
4	Ball	Brass (CP)
5	Seat	PTFE
6	Latch grip	Nylon 6
7	Latch	Stainless steel
8	Handle insert	TPE
9	Spindle	Stainless steel
10	Spindle seal	EPDM
11	Spindle bearing	PTFE
12	Screw	Stainless steel
13	PowerPress 'O' ring	EPDM
14	Spacer ring	Stainless steel
15	Grab ring	Stainless steel
16	Visu-Control® ring	Polypropylene
17	Protection cap	Polypropylene

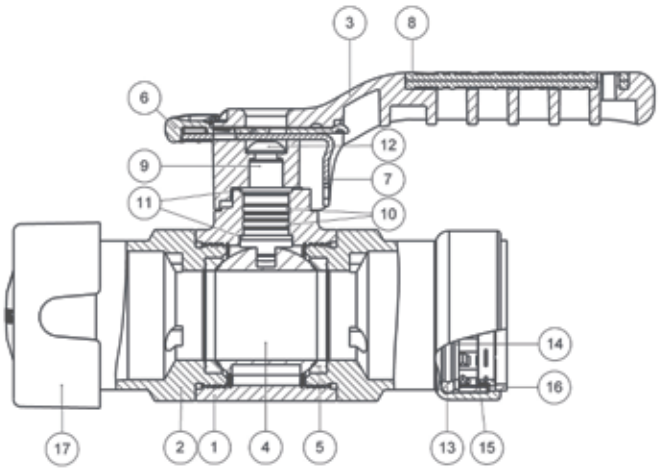

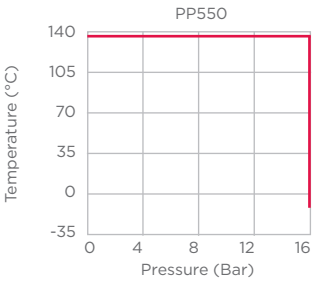

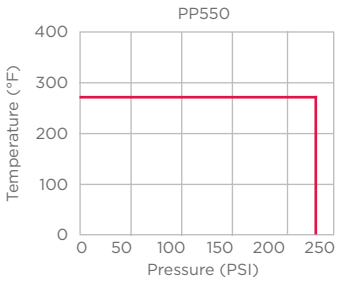

PPSU550 Ball Valve PN16

Nr.	Component	Material
1	Body	DZR brass CW511L
2	Cap	Carbon steel zinc nickel plated
3	Handle	Mazak
4	Ball	Brass (CP)
5	Seat	PTFE
6	Latch grip	Nylon 6
7	Latch	Stainless steel
8	Handle insert	TPE
9	Spindle	Stainless steel
10	Spindle seal	EPDM
11	Spindle bearing	PTFE
12	Screw	Stainless steel
13	PowerPress 'O' ring	EPDM
14	Spacer ring	Stainless steel
15	Grab ring	Stainless steel
16	Visu-Control® ring	Polypropylene
17	PowerPress union tail	Carbon steel zinc nickel plated
18	Split ring	Stainless steel
19	Union nut	Carbon steel zinc nickel plated
20	Union sealing washer	EPDM
21	Union end cap	Carbon steel zinc nickel plated

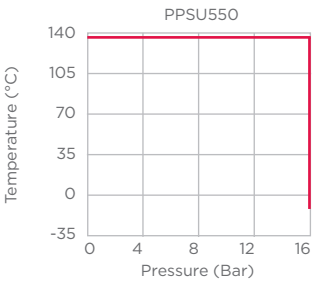

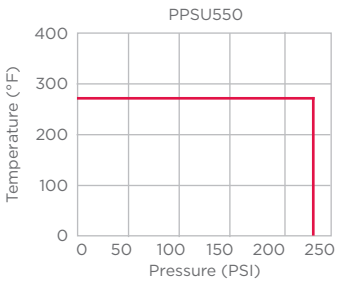

further details

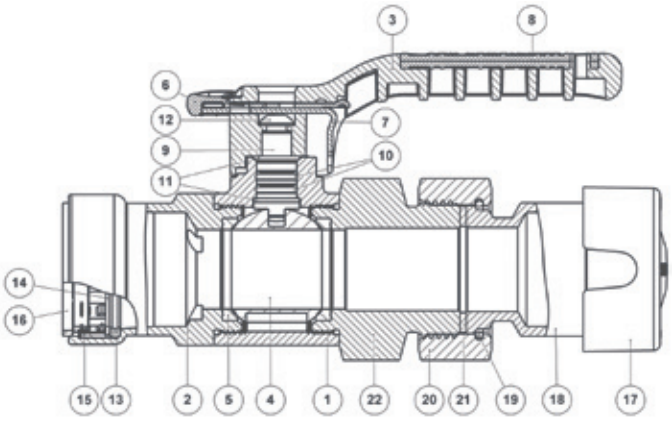

PP550 Ball Valve EL PN16

further details

Nr.	Component	Material
1	Body	DZR brass CW511L
2	Cap	Carbon steel zinc nickel plated
3	Handle	Mazak
4	Ball	Brass (CP)
5	Seat	PTFE
6	Latch grip	Nylon 6
7	Latch	Stainless steel
8	Handle insert	TPE
9	Spindle	Stainless steel
10	Spindle seal	EPDM
11	Spindle bearing	PTFE
12	Screw	Stainless steel
13	PowerPress 'O' ring	EPDM
14	Spacer ring	Stainless steel
15	Grab ring	Stainless steel
16	Visu-Control® ring	Polypropylene
17	Protection cap	Polypropylene
18	Extended spindle	Stainless steel
19	Handle extension	Mazak
20	Handle extension bearing	PTFE

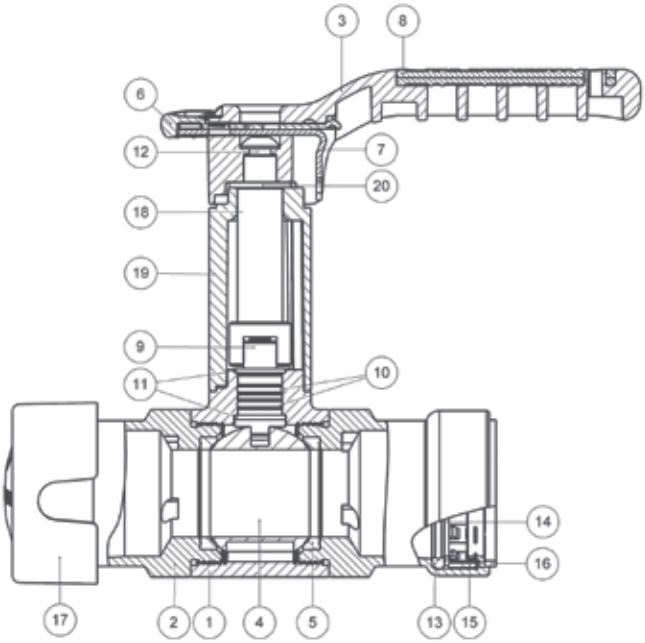

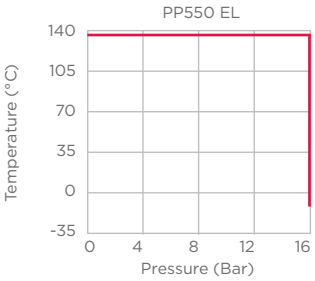

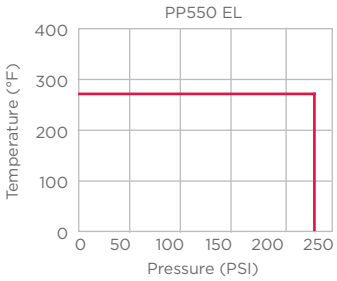

PPSU550 Ball Valve EL PN16

further details

Nr.	Component	Material
1	Body	DZR brass CW511L
2	Cap	Carbon steel zinc nickel plated
3	Handle	Mazak
4	Ball	Brass (CP)
5	Seat	PTFE
6	Latch grip	Nylon 6
7	Latch	Stainless steel
8	Handle insert	TPE
9	Spindle	Stainless steel
10	Spindle seal	EPDM
11	Spindle bearing	PTFE
12	Screw	Stainless steel
13	PowerPress 'O' ring	EPDM
14	Spacer ring	Stainless steel
15	Grab ring	Stainless steel
16	Visu-Control® ring	Polypropylene
17	Protection cap	Polypropylene
18	Extended spindle	Stainless steel
19	Handle extension	Mazak
20	Handle extension bearing	PTFE
21	PowerPress union tail	Carbon steel zinc nickel plated
22	Split ring	Stainless steel
23	Union nut	Carbon steel zinc nickel plated
24	Union sealing washer	EPDM EP1/1/5
25	Union end cap	Carbon steel zinc nickel plated

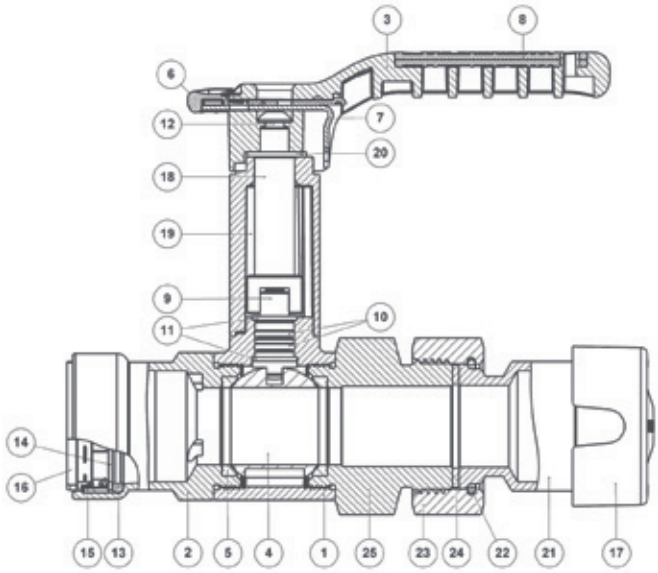

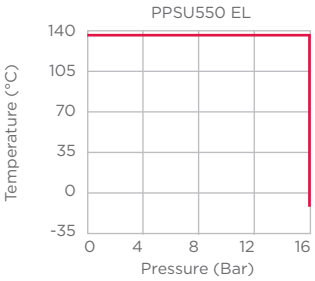

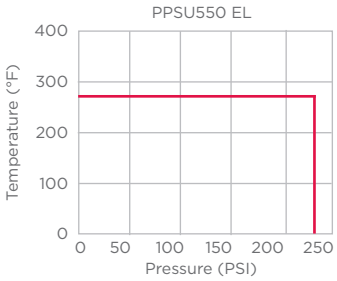

PP1260 Static Balancing Valve PN16

further details

Nr.	Component	Material
1	1260 Body	DZR cast brass
2	PowerPress adaptor	Carbon steel zinc nickel plated
3	PowerPress 'O' ring	EPDM
4	Separator spacer ring	Stainless steel
5	Grab ring	Stainless steel
6	Visu-Control® ring	Polypropylene
7	Protection cap	Polypropylene
8	Binder point	DZR brass
9	Orifice	DZR brass
10	Head	DZR brass
11	Head seal	EPDM
12	Spindle	DZR brass
13	Limiting screw	DZR brass
14	Limiting pin	DZR brass
15	Limiting seal	EPDM
16	Valve	DZR brass
17	Seat seal	PTFE
18	Lower valve	DZR brass
19	Spindle retaining nut	DZR brass
20	Spindle seals	EPDM
21	Screw	DZR brass
22	Lower handle	Nylon 66
23	Upper handle	Nylon 66
24	Digit register wheel	Nylon
25	Digit register disc	Nylon

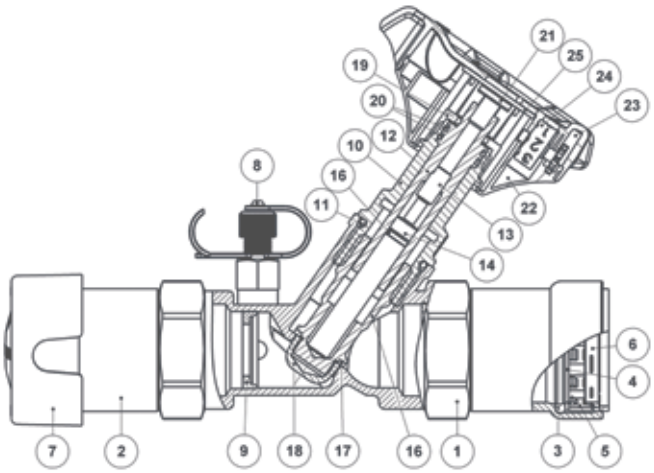

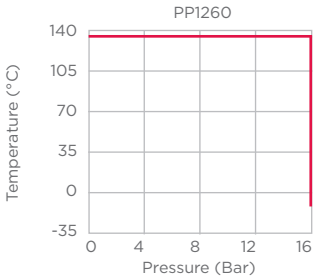

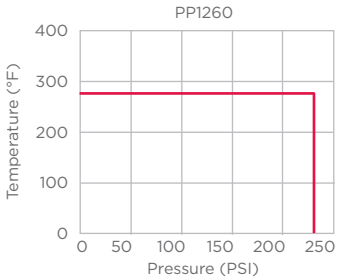

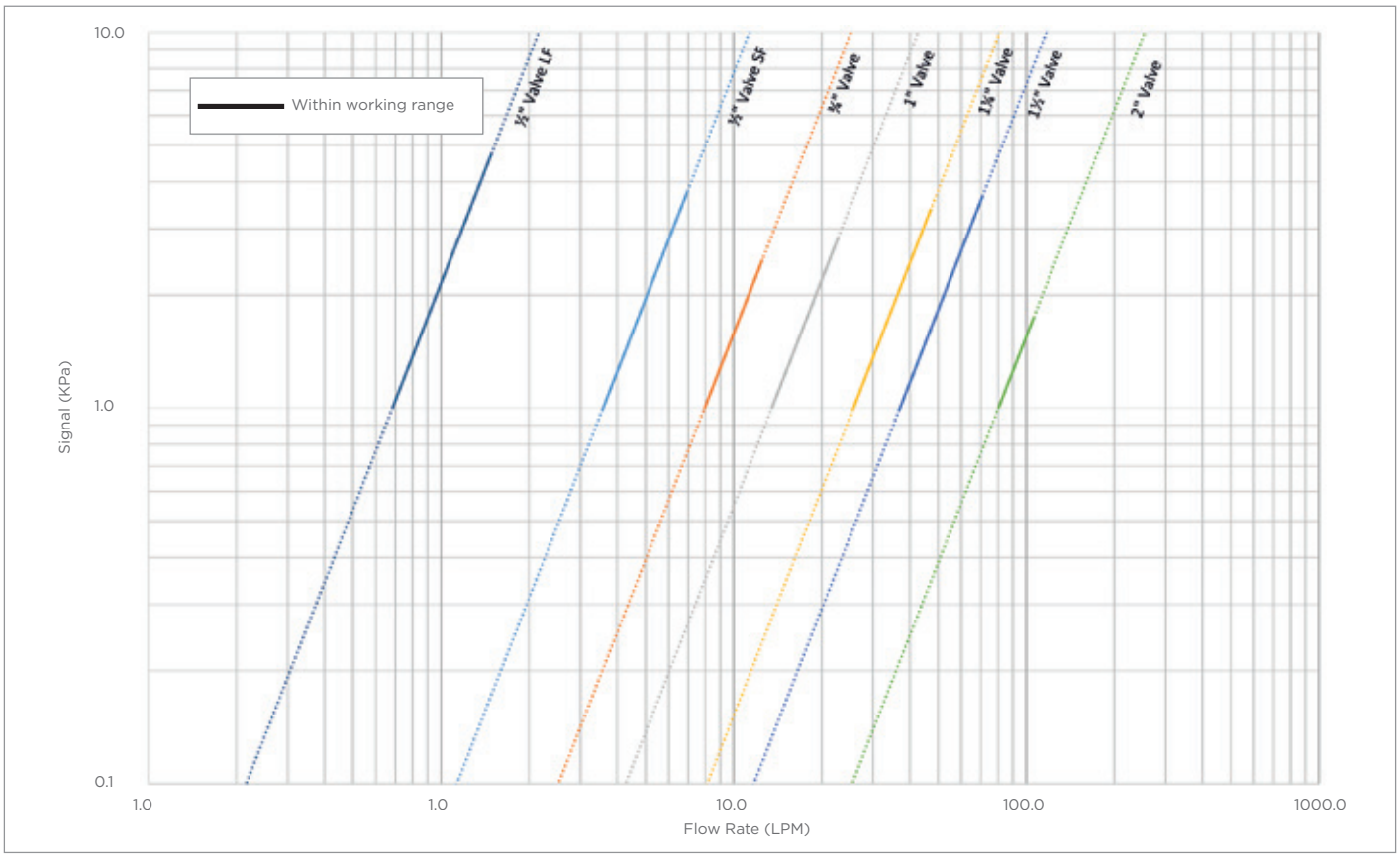

PPSU1260 Static Balancing Valve PN16

further details

Nr.	Component	Material
1	1260 valve	DZR cast brass
2	PowerPress adaptor	Carbon steel zinc nickel plated
3	PowerPress "O" ring	EPDM
4	Spacer ring	Stainless steel
5	Grab ring	Stainless steel
6	Visu-Control® ring	Polypropylene
7	Protection cap	Polypropylene
8	Binder point	DZR brass
9	Orifice plate	DZR brass
10	Head	DZR brass
11	Head seal	EPDM
12	Spindle	DZR brass
13	Limiting screw	DZR brass
14	Limiting pin	DZR brass
15	Limiting seal	EPDM
16	Valve	DZR brass
17	Seat seal	PTFE
18	Lower valve	DZR brass
19	Spindle retaining nut	DZR brass
20	Spindle seats	EPDM
21	Screw	DZR brass
22	Lower handle	Nylon 66
23	Upper handle	Nylon 66
24	Digit register wheel	Nylon
25	Digit register disc	Nylon
26	PowerPress union end adaptor	Carbon steel zinc nickel plated
27	Flat face washer	EPDM
28	Split ring	Stainless steel
29	PowerPress union end	Carbon steel zinc nickel plated
30	Union nut	Carbon steel zinc nickel plated

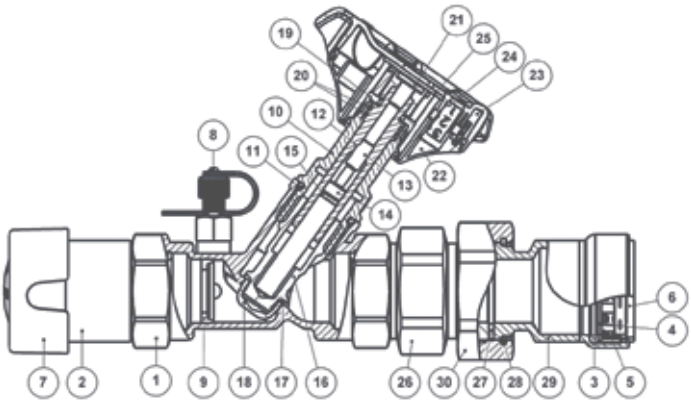

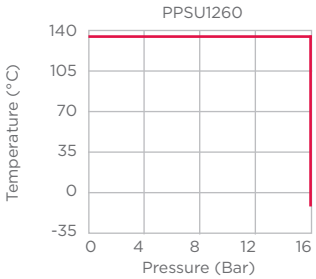

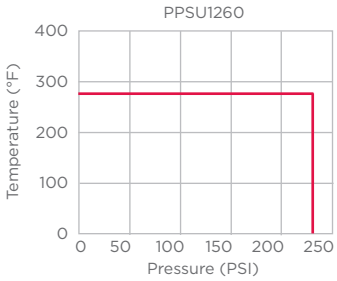

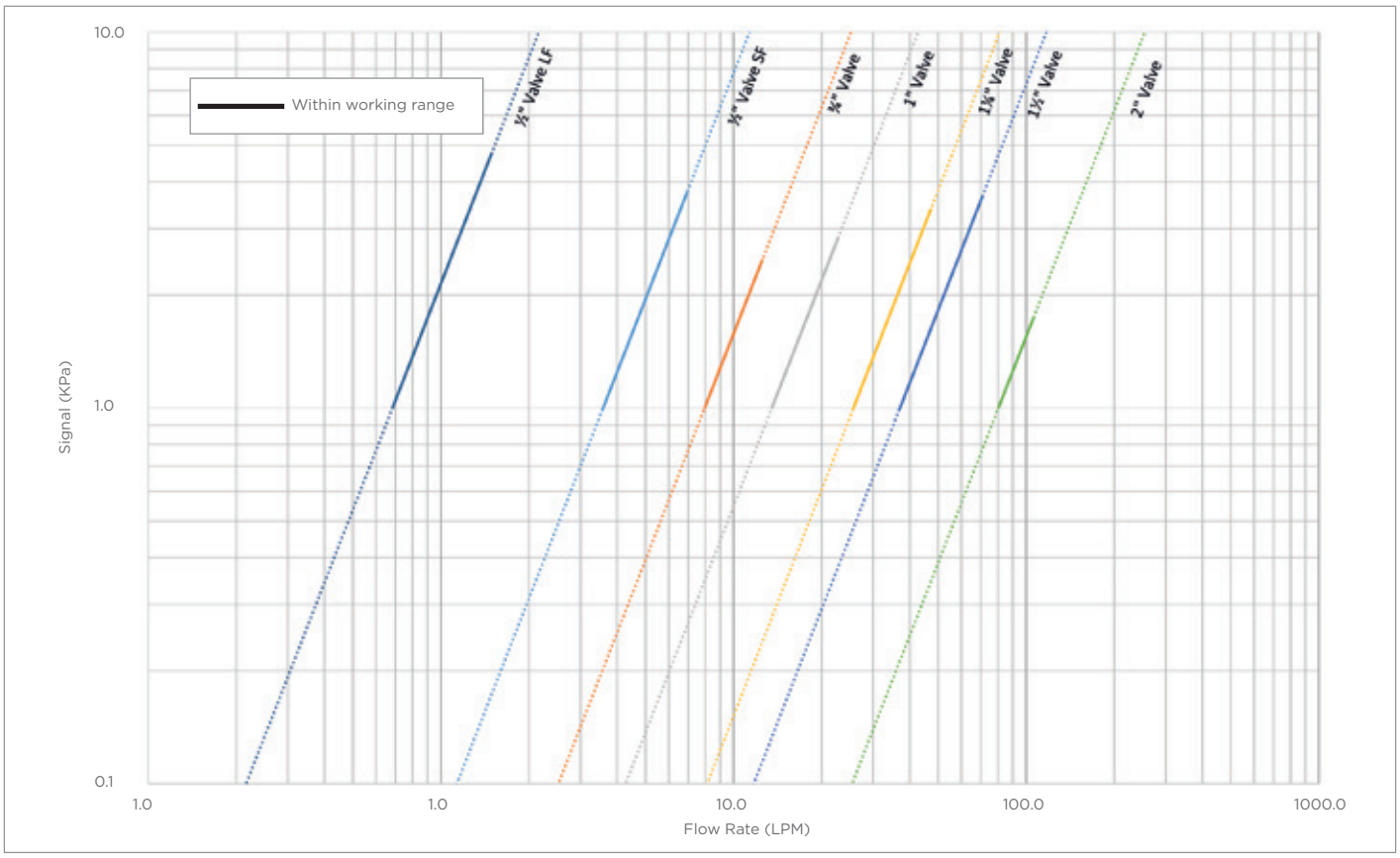

PP900 Static Balancing Valve PN16

further details

Nr.	Component	Material
1	900 VALVE	DZR brass
2	'O' ring	EPDM
3	Powerpress valve adaptor	Carbon steel zinc nickel plated
4	PowerPress 'O' ring	EPDM
5	Spacer ring	Stainless steel
6	Grab ring	Stainless steel
7	Visu-Control® ring	Polypropylene
8	Protection cap	Polypropylene

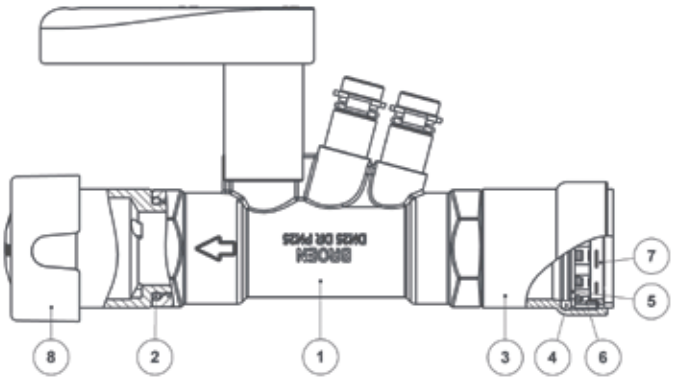

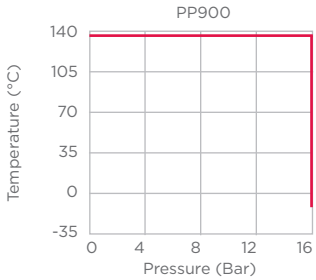

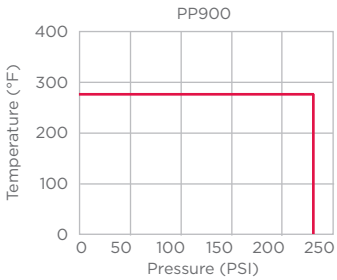

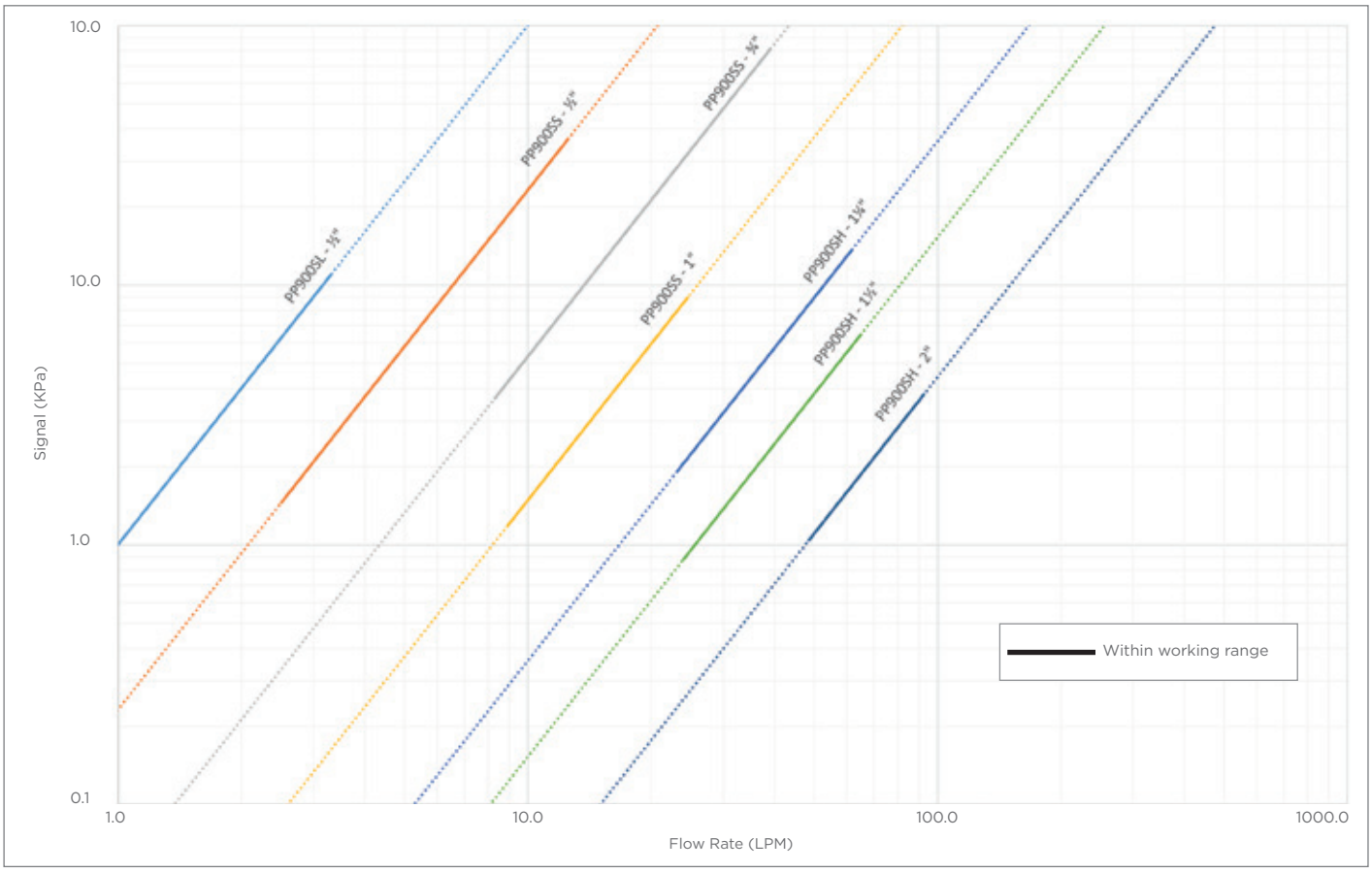

PPSU900 Static Balancing Valve PN16

further details

Nr.	Component	Material
1	900 valve	DZR brass
2	"O" ring seal	EPDM
3	PowerPress valve adaptor	Carbon steel zinc nickel plated
4	PowerPress "O" ring	EPDM
5	Spacer ring	Stainless steel
6	Grab ring	Stainless steel
7	Visu-Control® ring	Polypropylene
8	Protection cap	Polypropylene
9	Union end adaptor	Carbon steel zinc nickel plated
10	Flat face washer	EPDM
11	Union nut	Carbon steel zinc nickel plated
12	Split ring	Stainless steel
13	PowerPress union end	Carbon steel zinc nickel plated

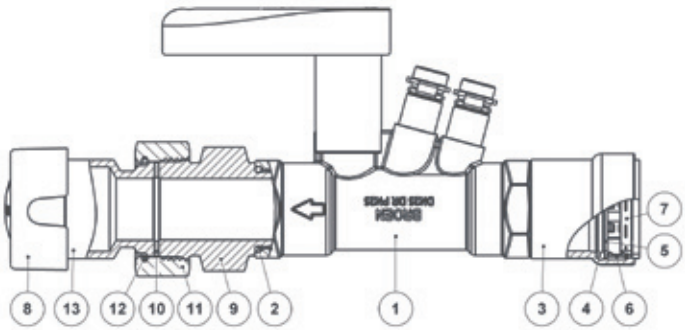

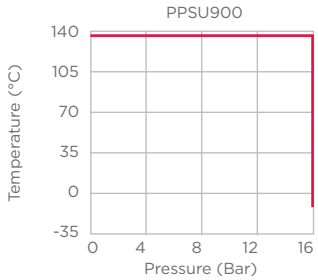

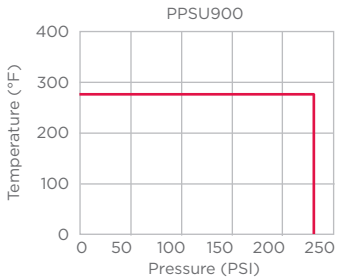

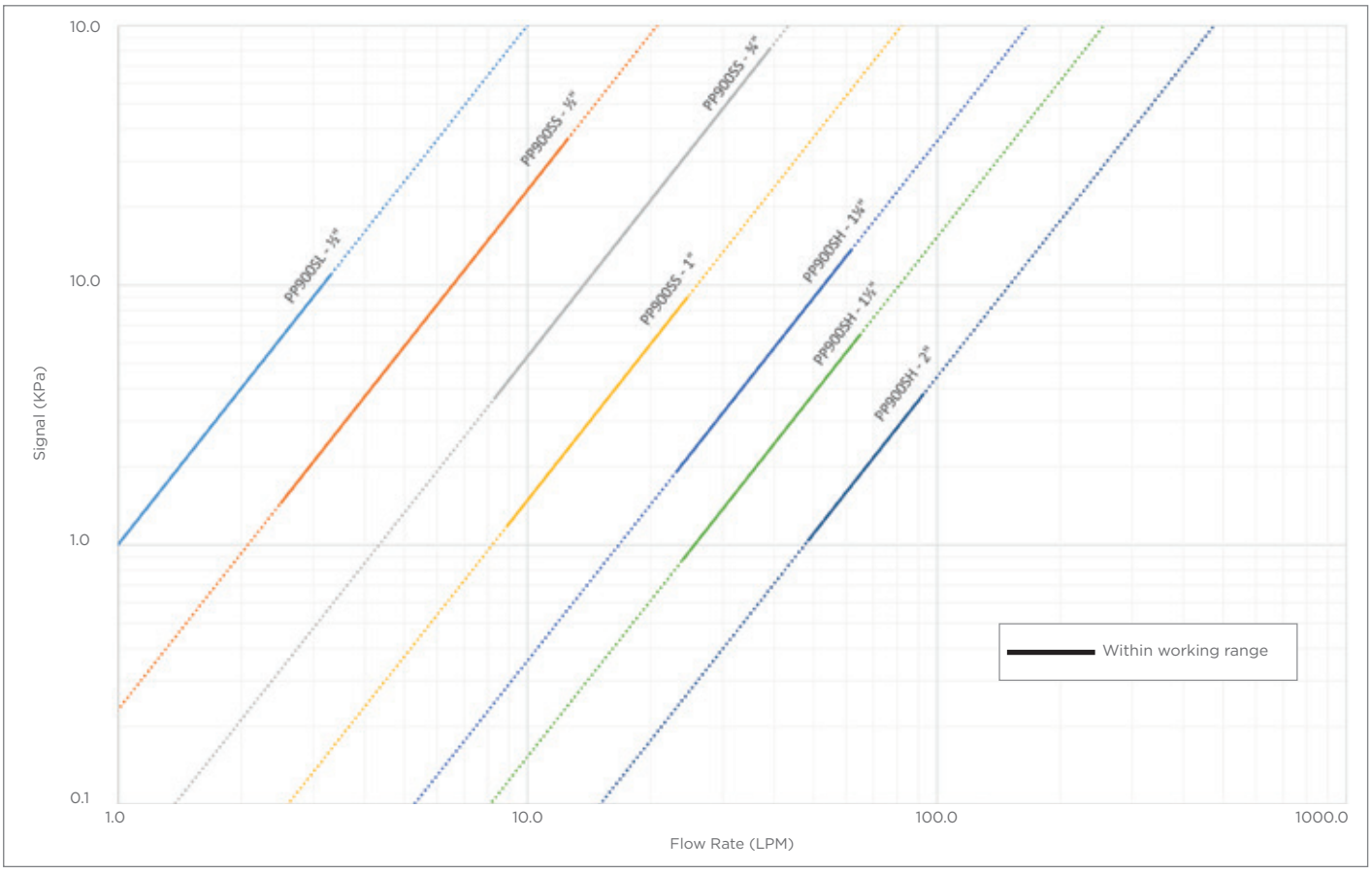

PP902 Dynamic Balancing Valve PN16

further details

Nr.	Component	Material
1	902 valve	DZR brass
2	'O' ring seal	EPDM
3	PowerPress Broen valve adaptor	Carbon steel zinc nickel plated
4	PowerPress 'O' ring	EPDM
5	Spacer ring	Stainless steel
6	Grab ring	Stainless steel
7	Visu-Control® ring	Polypropylene
8	Protection cap	Polypropylene

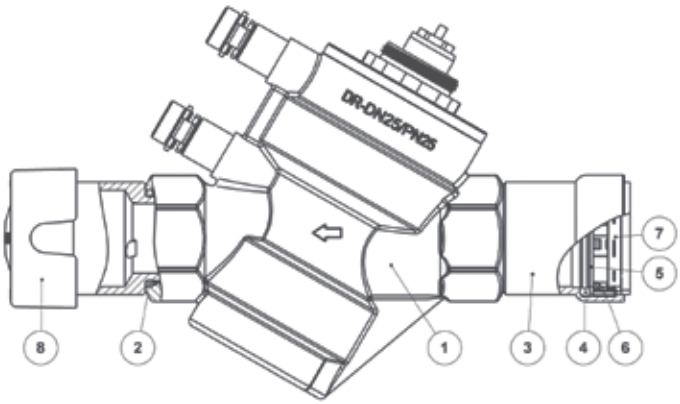

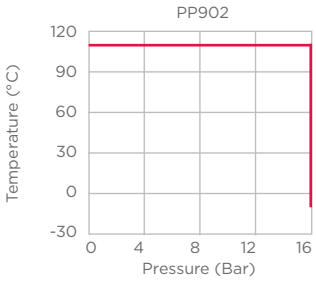

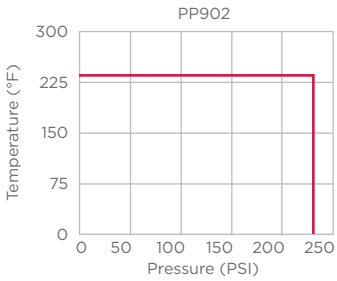

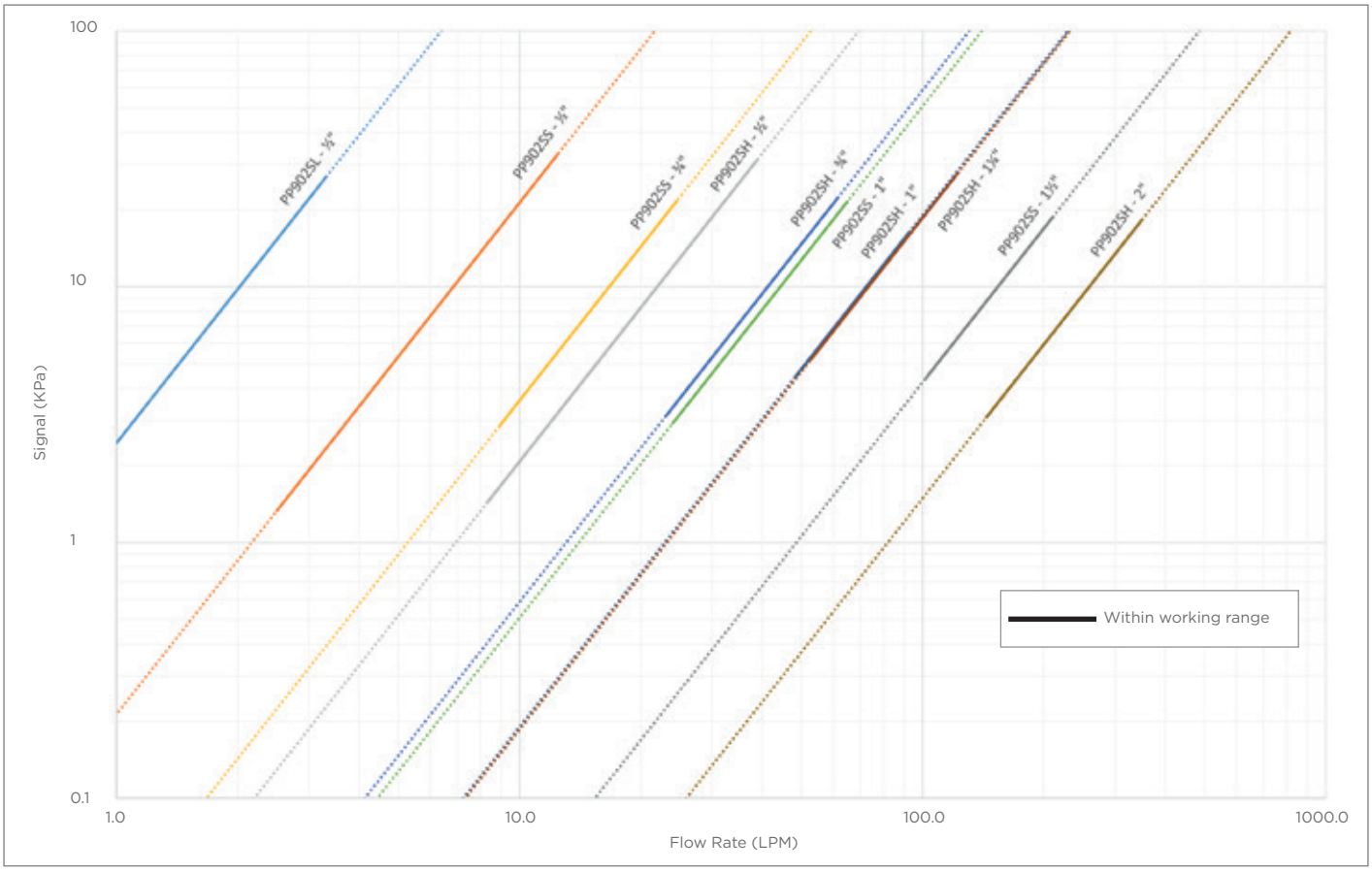

PPSU902 Dynamic Balancing Valve PN16

further details

Nr.	Component	Material
1	902 valve	DZR brass
2	"O" ring seal	EPDM
3	PowerPress adaptor	Carbon steel zinc nickel plated
4	PowerPress "O" ring	EPDM
5	Spacer ring	Stainless steel
6	Grab ring	Stainless steel
7	Visu-Control® ring	Polypropylene
8	Protection cap	Polypropylene
9	Union end adaptor	Carbon steel zinc nickel plated
10	Flat face washer	EPDM
11	Union nut	Carbon steel zinc nickel plated
12	Split ring	Stainless steel
13	PowerPress union end	Carbon steel zinc nickel plated

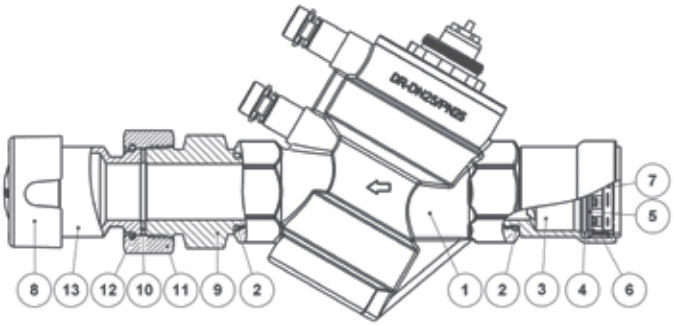

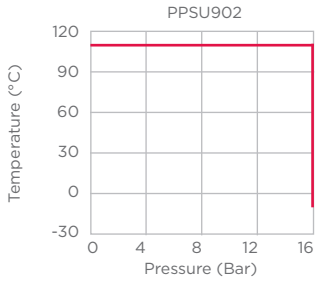

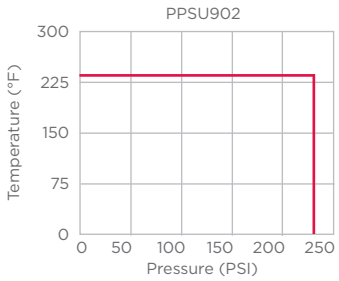

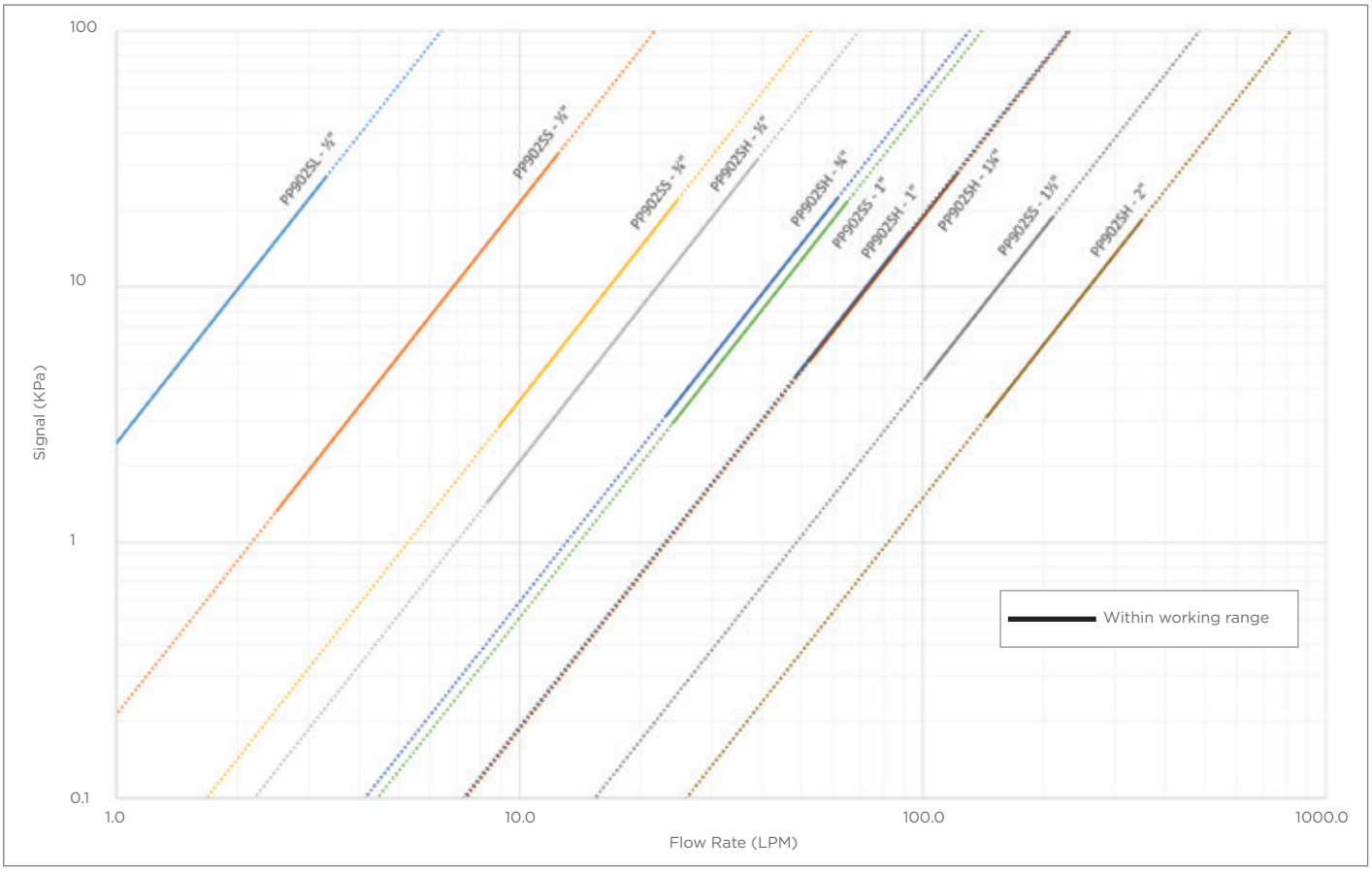

PPSU1070 / 125 Gate Valve PN16

Nr.	Component	Material
1	1070/125 valve	Bronze
2	PowerPress adaptor	Carbon steel zinc nickel plated
3	PowerPress "O" ring	EPDM
4	Spacer ring	Stainless steel
5	Grab ring	Stainless steel
6	Visu-Control® ring	Stainless steel
7	Protection cap	Polypropylene
8	Union end adaptor	Carbon steel zinc nickel plated
9	Flat face washer	EPDM
10	Union nut	Carbon steel zinc nickel plated
11	Split ring	Stainless steel
12	PowerPress union end	Carbon steel zinc nickel plated

further details

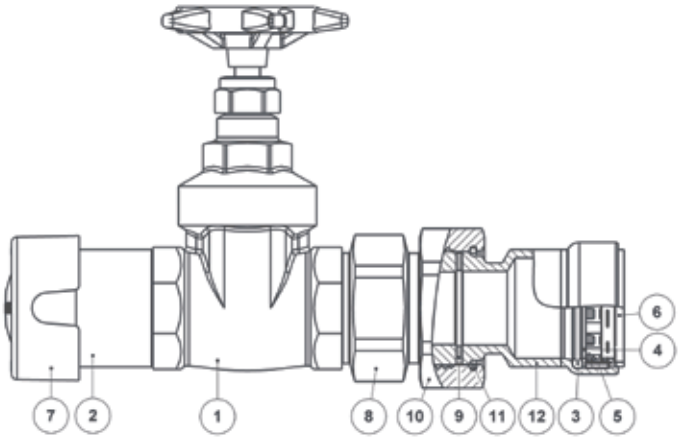

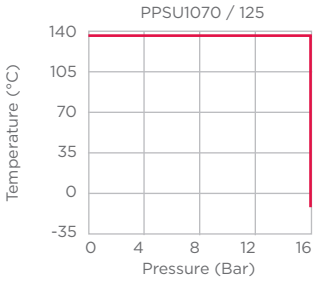

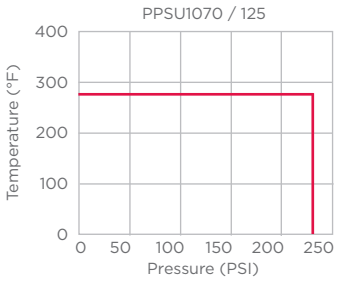

PP1060A Swing Check Valve PN16

Nr.	Component	Material
1	1060A Valve	Bronze
2	PowerPress valve adaptor	Carbon steel zinc nickel plated
3	PowerPress 'O' ring	EPDM
4	Spacer ring	Stainless steel
5	Grab ring	Stainless steel
6	Visu-Control® ring	Polypropylene
7	Protection cap	Polypropylene

Size	Type	Code	Flow L/s	Kv
½"	PP1060A	9440244	0.04	1.80
			0.10	3.70
			1.02	5.10
			0.04	5.70
¾"	PP1060A	9440255	0.04	2.70
			0.10	5.50
			0.40	13.60
			1.00	15.30
1"	PP1060A	9440266	0.01	7.70
			0.20	13.90
			0.30	18.40
			1.00	25.30
1 ¼"	PP1060A	9440277	0.20	15.00
			0.30	26.60
			0.40	25.30
			1.00	32.60
1 ½"	PP1060A	9440288	0.40	30.30
			0.60	40.20
			0.80	48.50
			3.00	54.40
2"	PP1060A	9440299	0.60	42.00
			0.80	54.00
			1.50	86.20
			4.00	98.00

further details

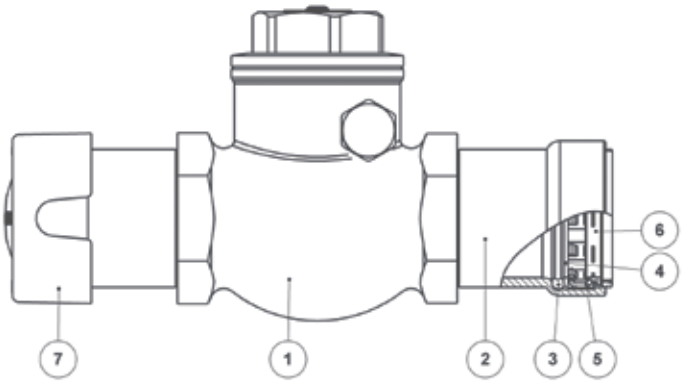

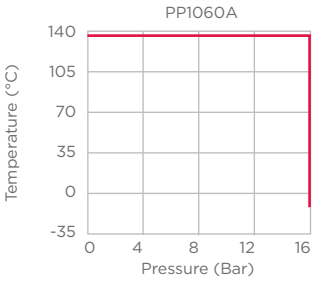

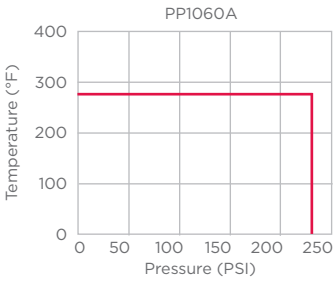

PP4 Pressure Reducing Valve PN16

further details

Nr.	Component	Material
1	PRV PT Valve	DZR brass
2	PowerPress valve adaptor	Carbon steel zinc nickel plated
3	PowerPress 'O' ring	EPDM
4	spacer ring	Stainless steel
5	Grab ring	Stainless steel
6	Visu-Control® ring	Polypropylene
7	Protection cap	Polypropylene

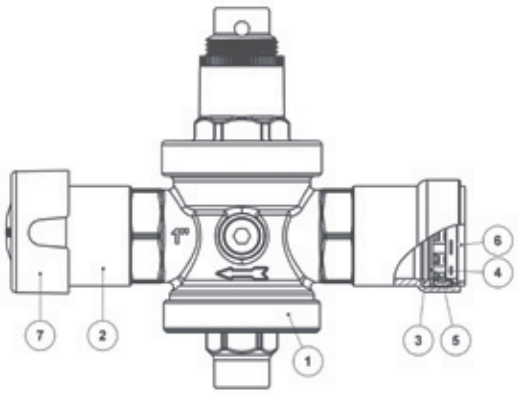

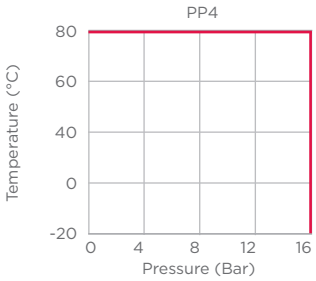

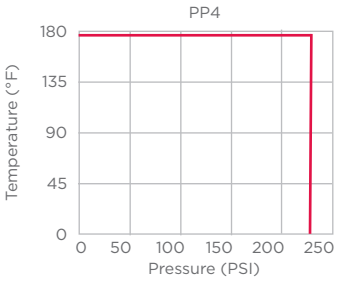

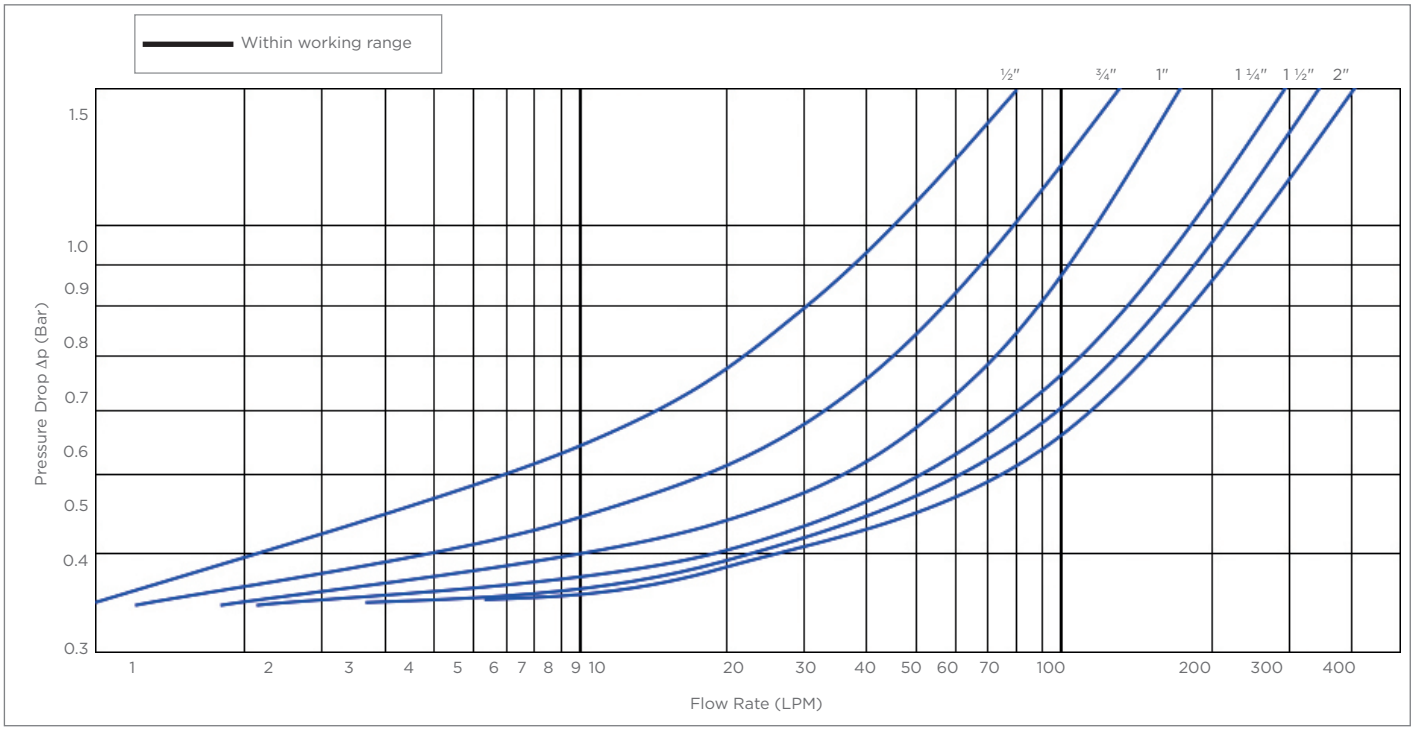

Disclaimer:
The technical data are non-binding and do not reflect the warranted characteristics of the products. They are subject to change. Please consult our General Terms and Conditions. Additional information is available upon request. It is the designer's responsibility to select products suitable for the intended purpose and to ensure that pressure ratings and performance data are not exceeded. The installation instructions should always be read and followed. The system must always be depressurized and drained before any components, whether defective or otherwise, are removed, modified or corrected.

PEGLER PY
Valve technology

Our fully integrated piping system incorporates a unique offering bringing together valves, fittings and pipes into one complete pipe-work system.
It combines the best world-class elements of modern connection and valve technology, incorporating press, push, groove, compression, capillary and threaded solutions for copper, steel, multi-layer and plastic pipes, with an emphasis on delivering heat free jointing.

head office

Aalberts Integrated Piping Systems Ltd
St. Catherine's avenue / Doncaster
South Yorkshire / DN4 8DF / England
tel: +44 (0) 1302 560 560
fax: +44 (0) 1302 560 203
email: info@pegler.co.uk
www.pegler.co.uk

All brand names and logo styles are registered trademarks. Maintaining a policy of continual product development, we reserve the right to change specifications, design and materials of products listed in this publication without prior notice.
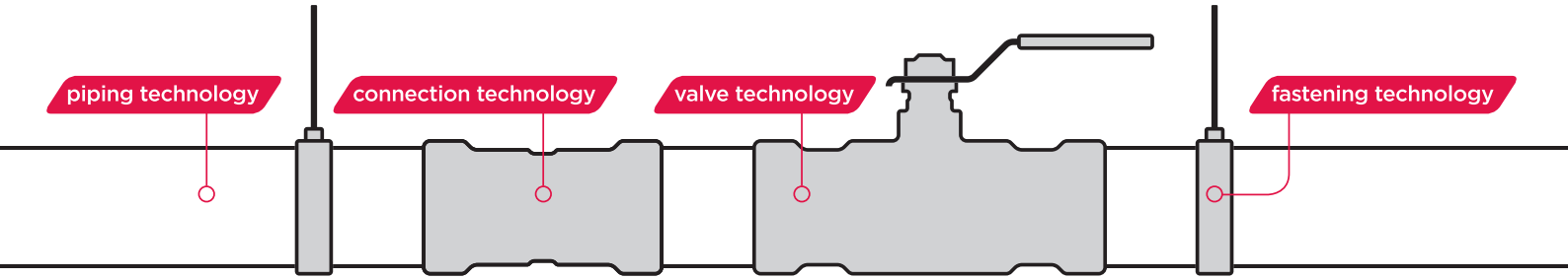
Lit. Ref: 880172