SFA Saniflo

A SOLUTION FOR EVERY PROJECT



MACERATORS, PUMPS, LIFTING STATIONS & CLEAR WATER

CONTENTS

4 | The SFA Group
6 | Made in France
8 | CSR
10 | Our solutions
11 | Glossary
13 | Hydraulic technology

14 MACERATORS

16 | Installation advice
17 | Saniflo Up
18 | Sanitop Up
19 | Sanipro XR Up
20 | Saniplus Up
21 | Sanislim
22 | Sanibest Pro
23 | Saniwall Pro Up – Glass Version
24 | Saniwall Pro Up – Tiled Version
25 | Saniwall Pro Up Style – Panel Version
26 | Sanipack Pro Up
27 | Saniaccess 1
28 | Saniaccess 2
29 | Saniaccess 3
30 | Descaler
30 | Sanialarm

31 SANICOMPACT RANGE

32 | Sanicompact
33 | Saniflush

34 GREY WATER PUMPS

36 | Installing a grey water pump
37 | Sanishower Flat
38 | Sanifloor +
40 | Sanishower +
41 | Sanivite +
42 | Sanispeed +
43 | Saniaccess Pump

44 SANICLIM RANGE

47 | Sanicondens Clim Mini
48 | Sanicondens Clim Pack
49 | Sanicondens Clim Deco
50 | Sanicondens Clim Maxi

51 SANICONDENS RANGE

53 | Sanicondens Deco +
54 | Sanicondens Eco
55 | Sanicondens Pro
56 | Sanicondens Best Flat
57 | Sanineutral Mini
58 | Sanineutral

59 LIFTING STATIONS

61 | Help choosing the right Lifting Station
68 | Sanicom 1
70 | Sanicom 2
72 | Sanicubic 1
74 | Sanicubic 2 Classic L **MODIFICATION**
76 | Sanicubic 2 Pro / Smart L **MODIFICATION**
78 | Sanicubic 1 GR HP L **MODIFICATION**
80 | Sanicubic 2 GR HP L **MODIFICATION**
82 | Sanicubic 1 GR
84 | Sanicubic 2 GR
86 | Sanicubic 1 VX L **MODIFICATION**
88 | Sanicubic 2 VX L **MODIFICATION**
90 | Sanicubic 1 SC
92 | Sanicubic 2 SC

94 UNDERGROUND LIFTING STATIONS

94 | Choosing an underground Lifting Station
98 | Sanifos 110 – Grey water
100 | Sanifos 110 – Grey water, black water
102 | Sanifos 280 – Grey water, storm water
104 | Sanifos 280 – Grey water, black water
106 | Sanifos 610 – Grey water, rainwater
108 | Sanifos 610 – Grey water, black water
110 | Sanifos 1300 – Grey water, black water
112 | Sanifos 1600/2100/3100

116 SUBMERSIBLE PUMPS

118 | Sanipuddle
120 | Sanisub 400
120 | Sanisub 800
122 | Sanisub ZPK
122 | Sanisub S ZPK
124 | Sanisub Steel 50 A
126 | Sanisub Steel and Emergency Kit
128 | Sanisub 800 Rainkit
130 | Sanipump GR/VX
132 | Sanipump ZPG 71
134 | Sanipump ZFS 71
136 | Sanipump SLD 700
138 | Sanipump VX 50
142 | Sanipump VX 65/80

146 ACCESSORIES

147 | Alarms and control boxes
149 | Sanifos accessories
150 | Sanicubic accessories
152 | Submersible accessories

154 GREASE TRAPS

154 | Grease Traps
158 | Sanigrease T 24
159 | Sanigrease T 40/60/80/100
160 | Sanigrease S ST NEW
162 | Sanigrease S AD NEW
164 | Sanigrease S MX NEW
166 | Sanigrease S PM NEW
168 | Sanigrease S PA NEW
170 | Sanigrease S 680/S 1600
172 | Sanigrease SU 1/1.5/2/3/4

175 CLEAR WATER PUMPS

180 | Sanijet 4-50 NEW
181 | Sanijet 4-50 PC2 NEW
182 | Sanijet 4-50 PC3 NEW
183 | Sanijet 5-55 NEW
184 | Sanijet 5-55 PC3 NEW
187 | SaniMHP 4-40 NEW
188 | SaniMHP 4-40 PC2 NEW
189 | SaniMHP 4-40 PC3 NEW
190 | SaniMHP 4-50 NEW
191 | SaniMHP 4-50 PC3 NEW
192 | SaniMHP 6-50 NEW
193 | SaniMHP 9-50 NEW
194 | SaniMHP 9-50 PC4 NEW
197 | Saniboost SJ 4-50 NEW
198 | Saniboost SJ 5-55 B NEW
199 | Saniboost MHP 4-40 B NEW
200 | Saniboost Smart NEW

THE SFA GROUP – WORLD LEADER IN SANITARY EQUIPMENT

AN INTERNATIONAL GROUP

SFA is established in 30 countries on 5 continents. Not only providing products but also trained professionals to help install and maintain our products to keep our customers happy.

Austria
Belgium
Czech Republic
France
Germany
Ireland
Italy
Luxembourg
Netherlands
Poland
Portugal
Russia
Romania
Spain
Sweden
Switzerland
Turkey
United Kingdom

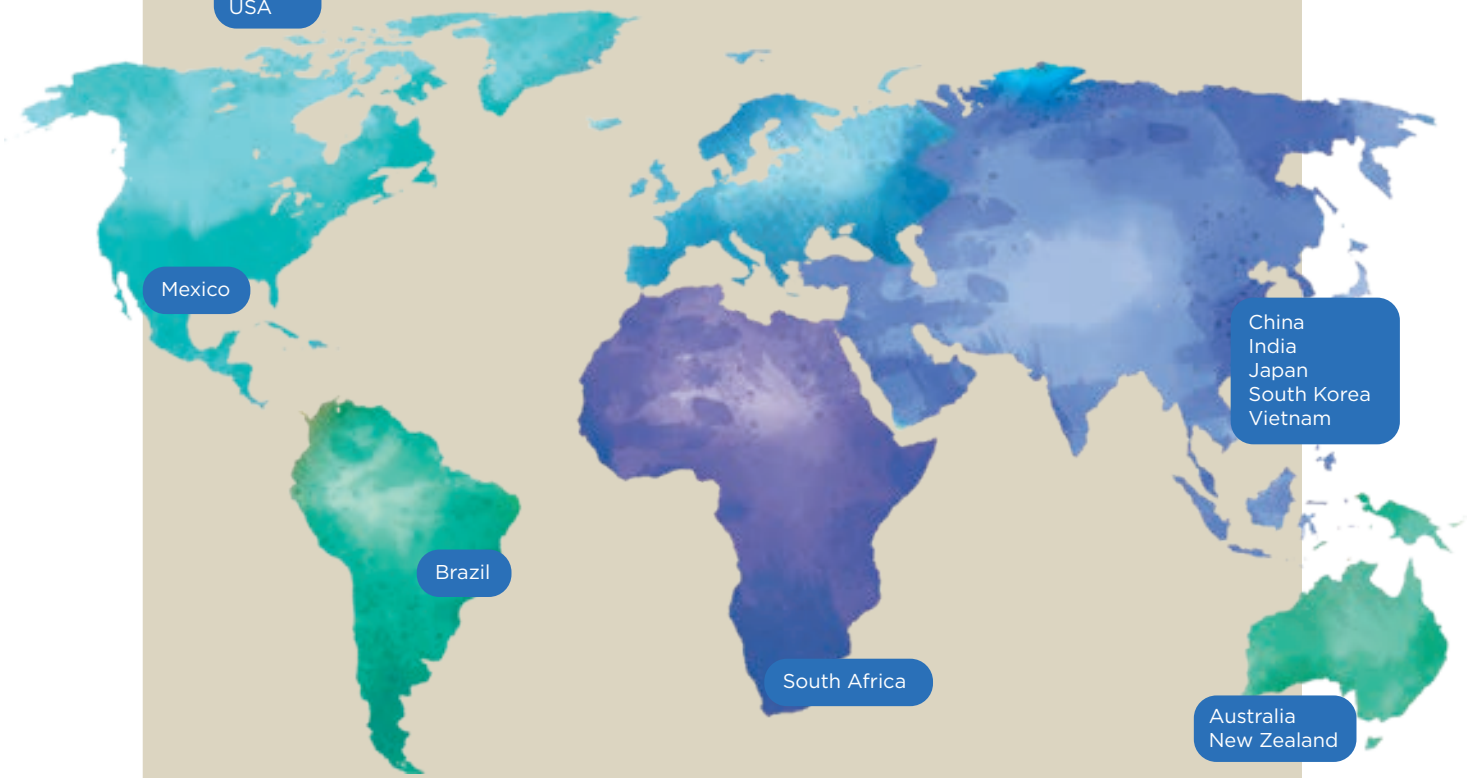

WE ALSO EXPORT TO MANY COUNTRIES, E.G.

Cyprus, Malta, Norway, Baltic States, Croatia, Israel, Ukraine, Bulgaria, Middle East, French overseas departments and territories, Algeria, Morocco, Tunisia, Egypt, Greece, Sudan, Finland, West Africa, ...



THIS IS THE SIGNATURE OF THE SFA GROUP

In 1958 SFA group invented the macerator; an ingenious product that has revolutionised interior design throughout the world.

Our technological advances mean we have strived to improve our offer both to homes and commercial properties.

THE SFA GROUP IS DEVELOPING AROUND 4 AREAS OF ACTIVITY

- **Domestic pumping solutions**
- **Professional pumping solutions**
- **Equipment for the showering and spa industries**
- **Water treatment**

VISIONS AND PERSPECTIVES

Our growth in the sector was boosted by the acquisition of Zehnder Pumpen, who were already a global player in the lifting station market.

Now SFA has an even stronger market position and even more pumps and lifting stations in our range to bring you the product that is right for your project.

1958
SFA was founded and the first macerator was invented

1970
Established the market in Europe and North America

1988
Acquisition of Kinedo – our shower brand

1990
ISO certification of our factories

2019
Acquisition of Zehnder Pumpen

2020
New corporate identity and acquisition of Format and Aquaturbo Systems

2022
Opening of two new subsidiaries: India and Vietnam

2023
Opening of a new subsidiary: South Korea

2025
Creation of the Clear Water Range

MADE IN FRANCE

The Saniflo factory in Brégy, France has been operating since 1958 and now has around 300 employees, all working hard to bring to life our SFA motto "making things easier" for both our customers and installers.

Due to the continuous investment, our site in Brégy has grown significantly and is now almost a completely autonomous production centre.

TEST AND DESIGN OFFICE



New ideas and thorough testing take place in the site laboratory, to ensure the quality and longevity of each product.

PRODUCING COMPOSITE AND RUBBER PARTS



We have 42 injection moulding machines and 800 moulds within the factory. The production is fully automated, from taking the plastic pellets from silos right through to finished goods.

SFA ACADEMY



Our factory in Brégy now has a 300 m² showroom with an adjoining 40 m² training room for training via the SFA Academy. The showroom displays about 50 SFA products, including domestic and commercial products.

Our UK head office has a training centre and meeting room.

WINDING AND MANUFACTURING OF MOTORS



SFA production lines have included the manufacture of the winding and assembly of the motors since 1960. This is a fully robotic process with digital controls to ensure the quality of the process throughout the production.

ELECTRONIC COMPONENTS



Our electronic components are also manufactured on site at Brégy and assembled by our operators.

COMPONENT ASSEMBLY



Components are assembled partly by human hand and partly by robots to ensure each component is meticulously positioned.

LOGISTICS





Product is shipped worldwide from our Brégy factory.

CORPORATE SOCIAL RESPONSIBILITY

Our responsibility:

Our group is united with this aim: **"To design and manufacture domestic and commercial solutions where natural drainage isn't possible."** Driven by this inventive spirit, we create original solutions that are low in water and energy consumption, **easy to install, and have a long lifespan**. We integrated **Corporate Social Responsibility (CSR) into our core values, long before it became a widespread practice.**



Since 2021, SFA has committed to the United Nations Global Compact **corporate responsibility initiative and its principles** regarding human rights, labour, environment, and anti-corruption efforts.



SOCIAL

Ensuring respect and dignity

Ensuring respect and dignity for all individuals in contact with our brands: employees, stakeholders, and users, both in the conduct of our business and in the use of our products.

ECOLOGY

Preserving Natural Resources

Preserving water and natural resources and reducing our carbon footprint through our high-performance solutions and products, designed to last.





ECONOMY

Leveraging our ingenuity to disrupt the market

Maintaining a sharp and inventive spirit, choosing reliable and virtuous partners to design solutions that disrupt the market and are accessible to as many people as possible.

COMPLIANCE WITH STANDARDS

All our products comply with the EN12050 construction product standard for pumping stations and the EN60335-1 standard for the safety of household appliances and electromagnetic compatibility standards.

Many SFA products are manufactured in our factories in France.



BENEFIT FROM OUR EXTENDED WARRANTY

5-year warranty

In order to register for your three year warranty extension, simply go to our website: **sfasaniflo.co.uk**

Our three year warranty extension is applied to the following products only:

Saniflo Up, Sanitop Up, Saniplus Up, Sanipro XR Up, Sanipack Pro Up, Saniwall Pro Up, Saniwall Pro Up Style, Sanivite +, Sanishower + and Sanispeed +.

All other Saniflo products have a two year warranty period as standard.

SANIFLO IS HERE TO SUPPORT YOU

Our After Sales Service

Approx 100 service engineers

We have a network of registered service engineers who are able to come to your home and business and assist with any servicing or maintenance issues.

AFTER SALES SERVICE IN YOUR HOME

In addition, our in-house customer service team is happy to advise over the phone, email or via our website **sfasaniflo.co.uk**

Do you have a technical question?

Contact us on: **020 8842 0033** or
by email: **technical@sfasaniflo.co.uk**

WHAT IS A SANIFLO SOLUTION?

To adapt to the different stages of life, it may be necessary to modify and change your house by building an extension, or by adding an en-suite, additional bathroom or utility room. Saniflo products make it possible to carry out installation easily and without undertaking major building work.

If the additional new room is located at a distance from the main drainage system, perhaps in the attic, garage or in the basement, it is often easier and cost effective to use small bore pipework to create this new space rather than having to do major building work to connect to the main sewer.

1. Macerators
2. Built in Macerator Toilets
3. Grey Water Pumps
4. Submersible Pumps
5. Clim Range
6. Condensate Range
7. Lifting Stations
8. Underground Lifting Stations



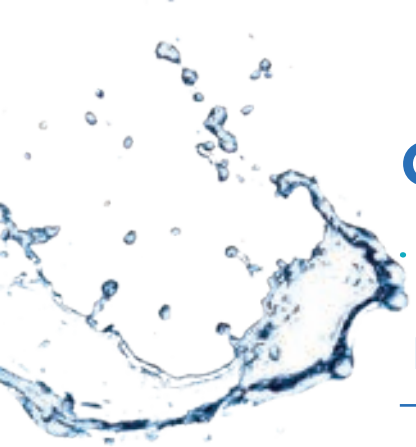

Glossary

Index

Grey water	Waste water from showers and baths, washing machines, dishwashers, washbasins and sinks, excluding water from toilets.
Black water	Waste water from toilets, as well as water from baths, showers, sinks and washbasins.
Waste water	Water modified by human activity. Refers to grey water and black water.
Clear water	Water containing particles smaller than 1 mm.
Flood water	Waters containing solid or fibrous material that could clog a pump.
Rainwater	Water from atmospheric precipitation.
Corrosive and/or saline water	Waters containing a significant amount of dissolved solids that may pose a risk to an unsuitable pump (e.g. salts up to 15%).

Abbreviations

PE	Polyethylene	**Q**	Flow rate
PA	Polyamide	**H**	Head
PP	Polypropylene	**DN**	Nominal diameter
EN-GJL	Grey cast iron	**Øext.**	External diameter
PPO	Polyphenylene oxide	**SS**	Stainless steel
GF	Fiberglass	**GS**	Galvanised steel
LD	Low density	**S1**	Continuous operation
HD	High density	**S3**	Intermittent operation

→	Inlet
→	Discharge
↔	Ventilation
The diameter means the external diameter Øext.	
The diameter is shown in mm.	

Our devices comply with standards EN 12050-1 for all-water pumping stations, EN 12050-2 for pumps, EN 60335-1 for the safety of household appliances, and must be installed according to the recommendations of standards EN 12056-4 and EN 752.

Hydraulic technology

Our pumps – from expertise to performance

The pump is the central element of the pumping station, designed to ensure the dependable removal of waste water from the installation. As part of the SFA Group, Saniflo is committed to ongoing innovation to improve pump efficiency and performance.

The reliability and safety of each pump are ensured through a comprehensive series of factory tests, including two electrical tests, a leak test, and a functional test.



Single-blade cutter

The single-blade cutter reduces the black waste into fine particles. The rotating steel blade cuts through waste materials and discharges the water and waste at the same time.



Multi-cutter disc

The multi-cutter disc uses a shredding action and acts as a turbine.

Sanicompact



Grinder Pro X K2

The Pro X K2 impeller is a robust blade that has been designed to deal with the occasional obstruction such as a wet wipe, tampon, sanitary towel or condom.

Sanicubic 1
Sanicubic 2 Classic L
Sanicubic 2 Pro/2 Pro Smart L
Sanifos 110/280/610/1300
Sanipump GR



Grinder Pro X K3

The sharp edges of the Pro X K3 are designed to grind and reduce solids before they enter the pump. Ideal for pumping black water.

Sanicubic 1 GR
Sanicubic 2 GR
Sanifos 1600/2100/3100
Sanipump ZFS 71

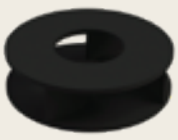

Closed impeller

Gives maximum strength and a more efficient flow. They are used in larger pumps, transferring grey water as they are less able to deal with solids.

Sanicom 1
Sanicom 2



Vortex impeller KX V6

Vortex impeller is able to deal with particles of up to 50 mm. The vortex generated keeps solids away from the impeller, reducing the risk of clogging.

Sanicubic 1 VX L
Sanicubic 2 VX L
Sanifos 280/610/1300 (VX Versions)
Sanipump VX



Single channel impeller

The single channel impeller has a large free passage to reduce clogging and give maximum pumping efficiency. It can be used for pumping waste water from households, commercial buildings, etc.

Sanicubic 1 SC
Sanicubic 2 SC



Two-channel impeller

Our two channel impeller prevents clogging and is suitable for pumping waste with coarse solid matter or threadlike content, hence ideal for the larger Sanifos units.

Sanipump ZPG 71
Sanifos 1600/2100/3100



Two-channel impeller for rainwater

Our new two-channel impeller for rainwater.

Sanipump SLD 700



Vortex impeller

Sanipump VX 50
Sanipump 65 / 80

SFA OFFERS YOU THE **QUIETEST RANGE OF MACERATORS** AND PUMPS ON THE MARKET!

SFA CONDUCTS ITS TESTS IN AN INDEPENDENT NATIONAL LABORATORY

SOME EXAMPLES BY RANGE

Macerators
Sanipro XR Up
46 dB(A)



Sanicompact
Sanicompact
51 dB(A)



Grey water pumps
Sanishower +
40 dB(A)



Sanicondens
Sanicondens Deco +
25 dB(A)



This data was collected by an acoustics laboratory, which measures the sound pressure level* at a distance of 1 metre

** The sound pressure level is the measurement of the noise emitted by the pump depending on the distance, independent of the room's environment.*



SANIFLO MACERATORS

The Saniflo range lets you extend your home's capabilities – even when drainage is an issue – without the disruption of major building works.

For over 60 years, SFA has offered lifting station solutions or pumps for waste water to facilitate the development of both commercial and domestic properties.

The installation of a Saniflo macerator and or pump makes it possible to install a bathroom or kitchen even where there is no access to conventional drainage.

All you need is a water inlet and outlet and an electrical connection.

BEFORE





AFTER



Macerators

	WC	Wall-hung WC	Basin	Bidet	Shower	Easy Installation
Saniflo Up For one WC P.17	•					✓
Sanitop Up For WC and basin P.18	•		•			✓
Sanipro XR Up For a bathroom P.19	•		•	•	•	✓
Saniplus Up Large capacity tank: Ideal for receiving large volumes of water P.20	•		•	•	•	✓
Sanislim A slimline macerator pump to fit easily behind slimline sanitaryware P.21	•		•	•	•	✓
Sanibest Pro High performance macerator. Ideal for light commercial use P.22	•		•	•	•	✓
Saniwall Pro Up (Glass Version) A frame with an in-built macerator to install a wall-hung WC (not included), comes with a glass front P.23		•	•	•	•	✓
Saniwall Pro Up (Tiled Version) A frame with an in-built macerator to install a wall-hung WC (not included), available for tiling P.24		•	•	•	•	✓
Saniwall Pro Up Style (Panel Version) A frame with an in-built macerator to install a wall-hung WC (not included) available with Carrara Marble or Cement Grey panel P.25		•	•	•	•	✓
Sanipack Pro Up The macerator designed to be concealed from view in bathroom furniture or behind a panel P.26		•	•	•	•	✓
Saniaccess 1-2-3 Complete solutions ideal for rental properties. (Subject to model chosen, check product details) P.27 P.28 P.29	•		•	•	•	✓



Descaler
Special sanitising cleaner P.30



Sanialarm
Security, reassurance and peace of mind... P.30

- RELIABILITY WITH 60 YEARS OF INNOVATION BEHIND EACH UNIT
- EASY ACCESS TO THE UNIT FOR MAINTENANCE
- AND STILL THE QUIETEST RANGE ON THE MARKET

CORRECT SANIFLO INSTALLATION?

CHECK OUT THE 10 GOLDEN RULES

1

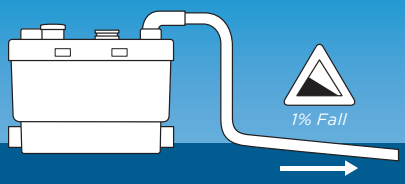

Discharge pipework should be copper or rigid solvent weld plastic, not 'push fit'. 1% fall on horizontal runs.

2

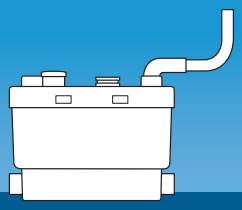

If a vertical lift is needed, this should be as close to the start of the run as is practically possible and from the highest point there must be a minimum 1% fall. The closer the vertical lift is to the machine, the more efficient the pump will be.

3

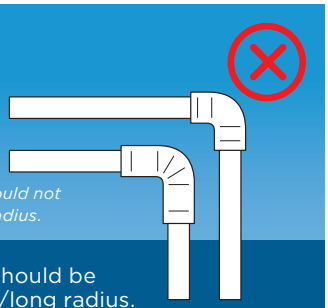

Bends should be smooth/long radius. This is particularly important for 22mm pipe.

4

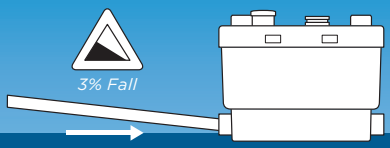

Pipes entering the Saniflo should have a gravity fall of 3%.

5

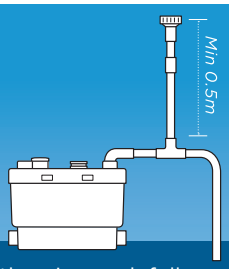

Where the pipework falls significantly below the unit e.g. a lower floor, fit an air admittance valve at the highest point capable of withstanding 10psi pressure, or increase pipe size coming down to 'break' syphon.

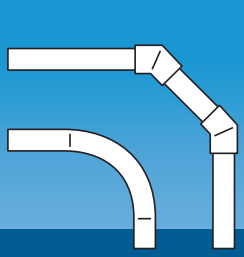

All pipework should be supported according to pipe manufacturers recommendations.

6

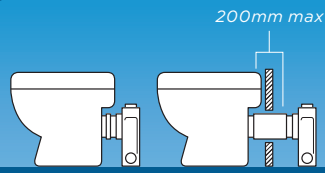

The unit should be easily accessible and removable in the event of maintenance being required. If boxed in, the boxing should be easily removed. Any extension between the WC pan spigot and wall should not exceed 200mm.

7

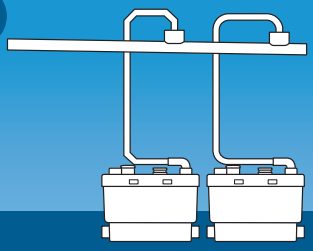

Each Saniflo discharge pipe should run separately to the soil pipe. If wastes are combined, it can only be into a larger pipe, which is on a gravity fall.

8



Since many closed coupled WCs do not have the space between the WC pan spigot and the wall, you may have to batten the cistern off the wall to make room for the Saniflo. However Sanislim will fit behind most closed coupled WCs without the need for this.

9



Position the Saniflo behind the toilet not beneath it.

10

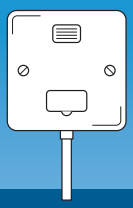

Electrical connection should be via an unswitched fixed wiring connector with a 5 amp fuse for domestic range macerators. Professional range may vary – check individual instruction manual.

For more information visit:

sfasaniflo.co.uk

Saniflo UP



4 m

100 m

DOMESTIC ONLY

5-year warranty

See page 9

PRODUCT FEATURES & BENEFITS

- Macerator for a WC only
- Easy replacement of an old model – identical pipe centres
- Easy maintenance using access at the top of the unit

CONNECTIONS

External discharge diameter: 22/28/32 mm

External inlet diameter: 100 mm

- Direct access to the basket in case of blockage due to improper use of the device without dismantling the device and without emptying the tank





Single blade cutter

PACK CONTAINS

Saniflo Up, non-return valve, connectors, activated carbon filter included to neutralise odours

CURVE

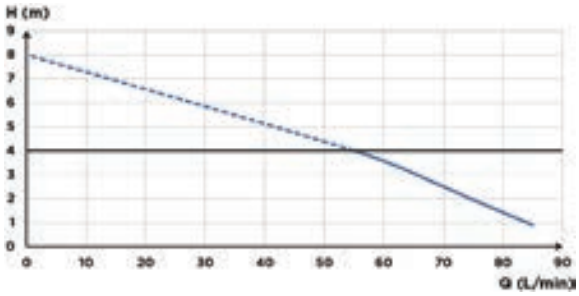

Recommended max height: 4 m

TECHNICAL FEATURES

Number of inlets	1
External inlet diameter	100 mm
Discharge diameter ext.	22/28/32 mm
Max. incoming temperature	35°C
Voltage / Frequency	220-240 50-60 Hz
Motor power	400 W
IP Rating	IP44
Electrical class	I
Noise level	46 dB(A)
Identification and logistics	
Gross weight	6 kg
Barcode	3308815074191
Product code	**6001**

OPTIONAL EXTRAS

Sanialarm
Barcode:
3308810042799
Product code:
1095



See page 30

Descaler
Barcode:
3308819899011
Product code:
1085



See page 30

DIMENSIONS

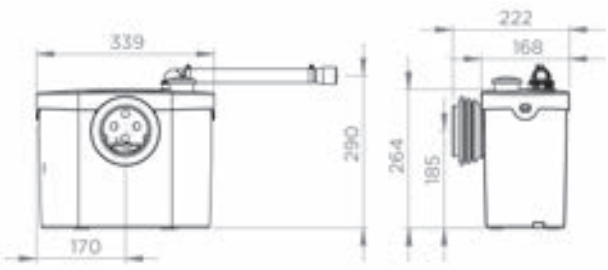

Dimensions (mm)

Sanitop UP



5 m

100 m

5-year warranty

See page 9

PRODUCT FEATURES & BENEFITS

- Macerator for WC and wash basin
- Easy replacement of an old model – identical pipe centres
- Easy maintenance due to access on the top of the unit

CONNECTIONS

External discharge diameter: 22/28/32 mm

External inlet diameter: 40, 100 mm

- Direct access to the basket in case of blockage due to improper use of the device without dismantling the device and without emptying the tank





Single blade cutter

PACK CONTAINS

Sanitop Up, non-return valve, connectors, activated carbon filter included to neutralise odours

CURVE

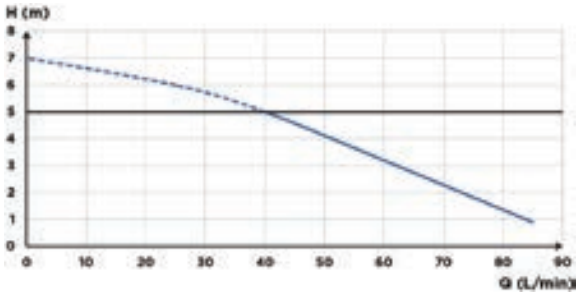

Recommended max height: 5 m

TECHNICAL FEATURES

Number of inlets	2
External inlet diameter	40, 100 mm
Discharge diameter ext.	22/28/32 mm
Max. incoming temperature	35°C
Voltage / Frequency	220-240 50-60 Hz
Motor power	400 W
IP Rating	IP44
Electrical class	I
Noise level	46 dB(A)
Identification and logistics	
Gross weight	6 kg
Barcode	3308815074061
Product code	**6002**

OPTIONAL EXTRAS

Sanialarm
Barcode:
3308810042799
Product code:
1095



See page 30

Descaler
Barcode:
3308819899011
Product code:
1085



See page 30

DIMENSIONS

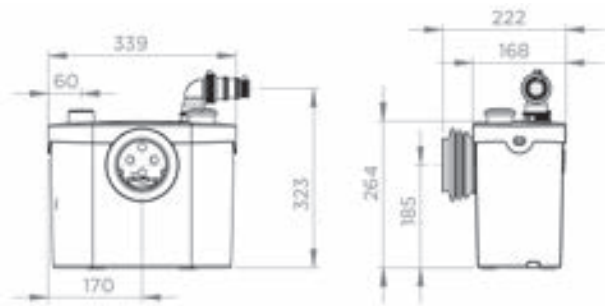

Dimensions (mm)

Sanipro XR UP



5 m

100 m

DOMESTIC ONLY

5-year warranty

See page 9

PRODUCT FEATURES & BENEFITS

- Macerator that allows you to install a complete bathroom
- Easy maintenance with access at the top of the unit
- Easy replacement of an old model – identical pipe centres

CONNECTIONS

External discharge diameter: 22/28/32 mm

External inlet diameter: 40, 100 mm

- Direct access to the basket in case of blockage due to improper use of the device without dismantling the device and without emptying the tank





Single blade cutter

PACK CONTAINS

Sanipro XR Up, non-return valve, connectors, activated carbon filter included to neutralise odours

CURVE

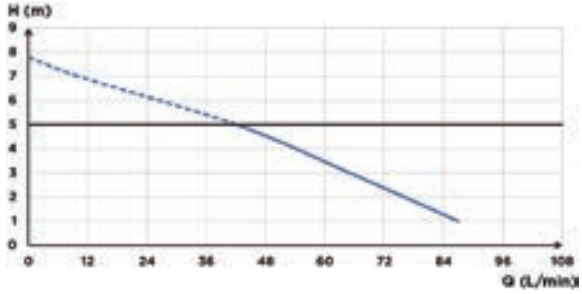

Recommended max height: 5 m

TECHNICAL FEATURES

Number of inlets	4
External inlet diameter	40, 100 mm
Discharge diameter ext.	22/28/32 mm
Max. incoming temperature	35°C
Min. shower tray height	130 mm
Voltage / Frequency	220-240 50-60 Hz
Motor power	400 W
IP Rating	IP44
Electrical class	I
Noise level	46 dB(A)
Identification and logistics	
Gross weight	7 kg
Barcode	3308815074108
Product code	**6006**

OPTIONAL EXTRAS

Sanialarm
Barcode: 3308810042799
Product code: 1095



See page 30

Descaler
Barcode: 3308819899011
Product code: 1085



See page 30

DIMENSIONS

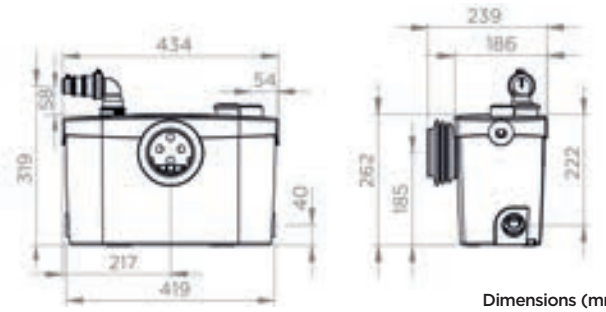

Dimensions (mm)

Saniplus UP

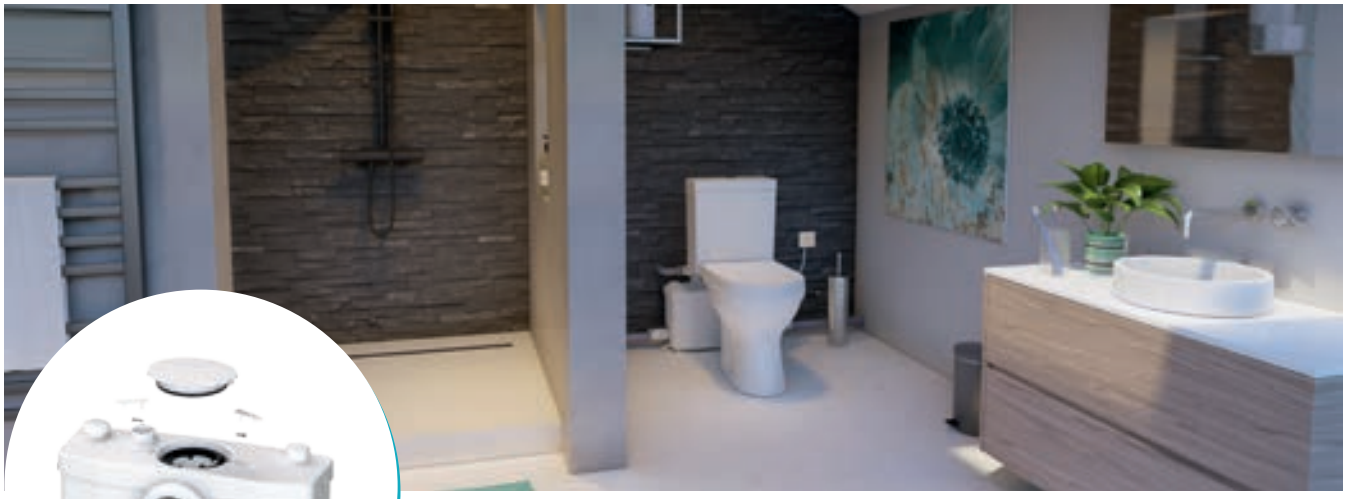

5 m

100 m

DOMESTIC ONLY

5-year warranty

See page 9

PRODUCT FEATURES & BENEFITS

- Macerator with large capacity tank, ideal for larger volumes of water
- Easy replacement of an old model – identical pipe centres
- Easy maintenance thanks to access from the top of the unit

CONNECTIONS

External discharge diameter: 22/28/32 mm

External inlet diameter: 40, 100 mm

- Direct access to the basket in case of blockage due to improper use of the device without dismantling the device and without emptying the tank





Single blade cutter

PACK CONTAINS

Saniplus Up, non-return valve, connectors, activated carbon filter to neutralise odours

CURVE

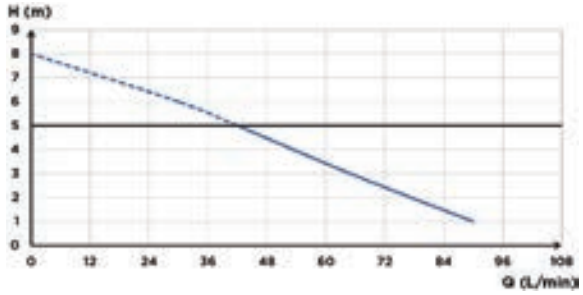

Recommended max height: 5 m

TECHNICAL FEATURES

Number of inlets	4
External inlet diameter	40, 100 mm
Discharge diameter ext.	22/28/32 mm
Max. incoming temperature	35°C
Min. shower tray height	130 mm
Voltage / Frequency	220-240 50-60 Hz
Motor power	400 W
IP Rating	IP44
Electrical class	I
Noise level	46 dB(A)
Identification and logistics	
Gross weight	8 kg
Barcode	3308815074047
Product code	**6003**

OPTIONAL EXTRAS

Sanialarm
Barcode:
3308810042799
Product code:
1095



See page 30

Descaler
Barcode:
3308819899011
Product code:
1085



See page 30

DIMENSIONS

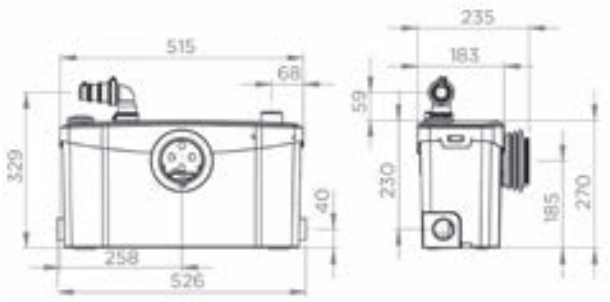

Dimensions (mm)

Sanislim



2.5 m

40 m

2-year warranty

See page 9

PRODUCT FEATURES & BENEFITS

- Macerator that can take waste from a small bathroom despite its slimline dimensions
- Slimline modern design fits easily behind most WCs
- Inlets on either side of the unit for easy installation of an en-suite

CONNECTIONS

External discharge diameter: 22/28/32 mm

External inlet diameter: 40/100 mm



Single blade cutter



PACK CONTAINS

Sanislim, non-return valve, connectors and activated carbon filter included to neutralise odours

CURVE

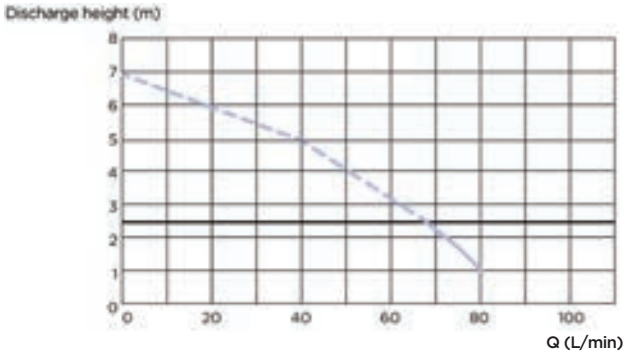

Recommended max height: 2.5 m

TECHNICAL FEATURES

Number of inlets	4
External inlet diameter	40, 100 mm
External discharge diameter	22/28/32 mm
Shower tray height	150 mm
Max. incoming temperature	35°C
Voltage - Frequency	220-240 V - 50-60 Hz
Motor power	400 W
IP rating	IP44
Electrical class	I
Noise level	48 dB(A)
Identification and logistics	
Gross weight	5.8 kg
Barcode	3308819901394
Product code	**1054/1**

OPTIONAL EXTRAS

Sanialarm
Barcode: 3308810042799
Product code: 1095



See page 30

Descaler
Barcode: 3308819899011
Product code: 1085



See page 30

DIMENSIONS

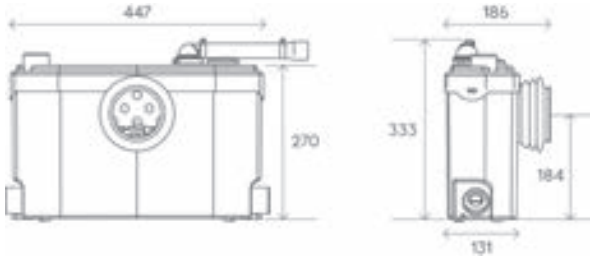

Dimensions (mm)

Sanibest Pro



7 m

110 m

2-year warranty

See page 9

PRODUCT FEATURES & BENEFITS

- High performance macerator
- Suitable for commercial premises
- Can deal with occasional obstructions
- Easy maintenance with access from the top of the unit

CONNECTIONS

External discharge diameter: 22/28/32 mm

External inlet diameter: 40, 100 mm

- Access directly to the electrics via the lid



Pro X K2 grinder



PACK CONTAINS

Sanibest Pro, non-return valve, connectors, activated carbon filter included to neutralise odours

CURVE

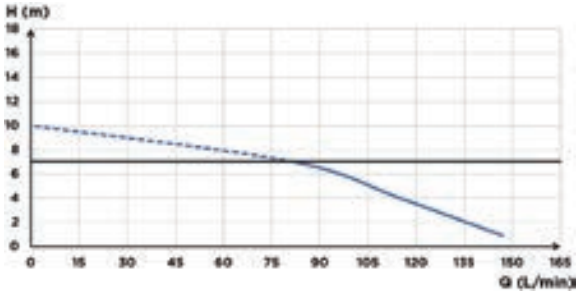

Recommended max height: 7 m

TECHNICAL FEATURES

Number of inlets	4
External inlet diameter	40, 100 mm
Discharge diameter ext.	22/28/32 mm
Max. incoming temperature	35°C
Min. shower tray height	150 mm
Activation level	85 mm
Voltage / Frequency	220-240 50-60 Hz
Motor power	1100 W
IP Rating	IP44
Electrical class	I
Identification and logistics	
Gross weight	12 kg
Barcode	3308815013039
Product code	**1053/1**

OPTIONAL EXTRAS

Sanialarm
Barcode:
3308810042799
Product code:
1095



See page 30

Descaler
Barcode:
3308819899011
Product code:
1085



See page 30

DIMENSIONS

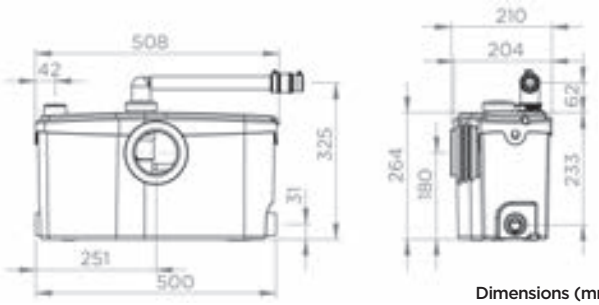

Dimensions (mm)

Saniwall Pro UP

Glass Version



5 m

100 m

GROHE

DOMESTIC ONLY

5-year warranty

See page 9

PRODUCT FEATURES & BENEFITS

- The support frame and macerator solution for use with a wall-hung WC (not provided)
- Easy maintenance: double access to the product
- Perfectly integrated with an elegant and contemporary design for any bathroom décor
- Glass wall panel with flush plate included

CONNECTIONS

External discharge diameter: 22/28/32 mm

External inlet diameter: 40, 100 mm

- Direct access to the electrics via the lid





Single blade cutter

PACK CONTAINS

Saniwall Pro Up, Grohe support frame, glass panel, non-return valve, connectors and carbon filter

CURVE

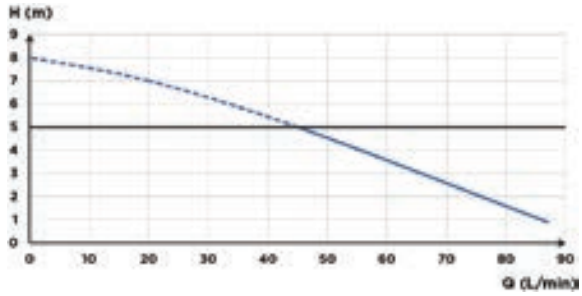

Recommended max height: 5 m

TECHNICAL FEATURES

Number of inlets	3
External inlet diameter	40, 100 mm
Discharge diameter ext.	22/28/32 mm
Max. incoming temperature	35°C
Min. shower tray height	130 mm
Voltage / Frequency	220-240 50-60 Hz
Motor power	400 W
IP Rating	IP44
Electrical class	I
Noise level	47 dB(A)
Identification and logistics	
Gross weight	45 kg
Barcode	3308815074115
Product code	**6110**

OPTIONAL EXTRAS

Descaler
Barcode: 3308819899011
Product code: 1085

See page 30



DIMENSIONS

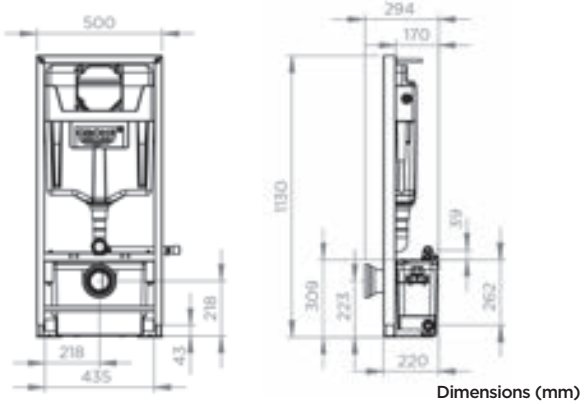

Dimensions (mm)

Saniwall Pro UP

Tiled Version



5 m

100 m

5-year warranty

See page 9

PRODUCT FEATURES & BENEFITS

- The support frame and macerator solution for use with a wall-hung WC (not provided)
- Easy maintenance: double access to the product
- Perfectly integrated with an elegant and contemporary design for tiled finish to incorporate any bathroom décor

CONNECTIONS

External discharge diameter: 22/28/32 mm

External inlet diameter: 40, 100 mm

- Direct access to the electrics via the lid





Single blade cutter

PACK CONTAINS

Saniwall Pro Up, Grohe support frame, magnetic feet (tiled version), non-return valve, connectors and carbon filter

CURVE

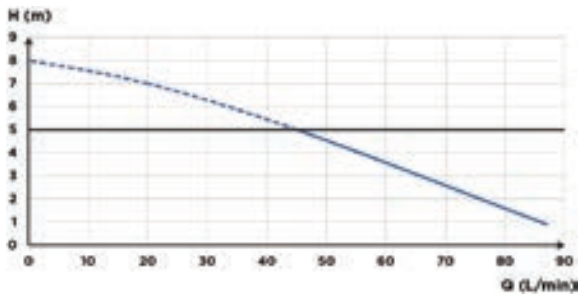

Recommended max height: 5 m

TECHNICAL FEATURES

Number of inlets	3
External inlet diameter	40, 100 mm
Discharge diameter ext.	22/28/32 mm
Max. incoming temperature	35°C
Min. shower tray height	130 mm
Voltage / Frequency	220-240 50-60 Hz
Motor power	400 W
IP Rating	IP44
Electrical class	I
Noise level	47 dB(A)
Identification and logistics	
Gross weight	30 kg
Barcode	3308815076102
Product code	**6111**

OPTIONAL EXTRAS

Descaler
Barcode: 3308819899011
Product code: 1085

See page 30



DIMENSIONS

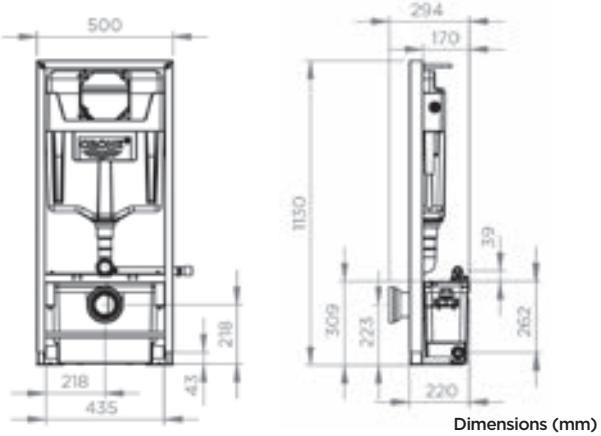

Dimensions (mm)

Saniwall Pro UP Style

Panel Version



5 m

100 m

GROHE

DOMESTIC ONLY

5-year warranty

See page 9

PRODUCT FEATURES & BENEFITS

- The support frame and macerator solution, for use with a wall-hung WC (not provided)
- Easy maintenance: double access to the product
- Perfectly integrated with an elegant and contemporary design
- Panel available in two colour options – Carrara Marble or Concrete Grey

CONNECTIONS

External discharge diameter: 22/28/32 mm

External inlet diameter: 40, 100 mm

- Direct access to the electrics via the lid





Single blade cutter

PACK CONTAINS

Saniwall Pro Up, Grohe support frame, control plate, magnetic feet, non-return valve, connectors, carbon filter, composite panel in Carrara Marble or Concrete Grey, carbon filter

CURVE

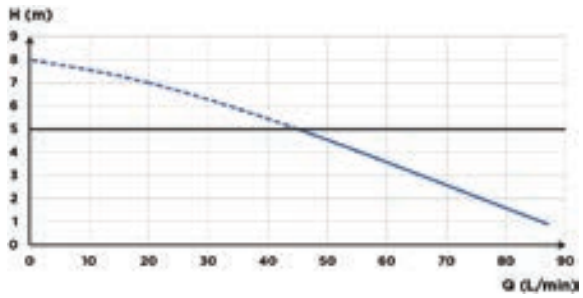

Recommended max height: 5 m

TECHNICAL FEATURES

Number of inlets	3	
External inlet diameter	40, 100 mm	
Discharge diameter ext.	22/28/32 mm	
Max. incoming temperature	35°C	
Min. shower tray height	130 mm	
Voltage / Frequency	220-240 50-60 Hz	
Motor power	400 W	
IP Rating	IP44	
Electrical class	I	
Noise level	47 dB(A)	
Identification and logistics		
Gross weight	34 kg	
Barcode	3308815097169	3308815097138
Product code	**Carrara Marble 6112**	**Concrete Grey 6114**

OPTIONAL EXTRAS

Descaler
Barcode: 3308819899011
Product code: 1085



See page 30

DIMENSIONS

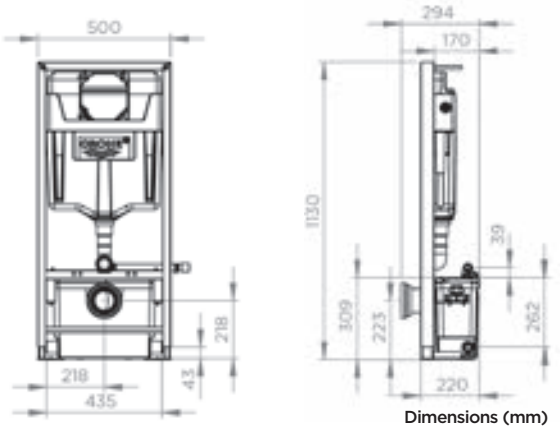

Dimensions (mm)

Sanipack Pro UP



5 m

100 m

DOMESTIC ONLY · DOMESTIC ONLY ·

5-year warranty

See page 9

PRODUCT FEATURES & BENEFITS

- The macerator for wall-hung toilets that can be discreetly hidden from view
- Easy maintenance with double access to the product
- Allows for a complete shower room

CONNECTIONS

External discharge diameter: 22/28/32 mm

External inlet diameter: 40, 100 mm

- Direct access to the basket in case of blockage due to improper use of the device without dismantling the device and without emptying the tank





Single blade cutter

PACK CONTAINS

Sanipack Pro Up, non-return valve, connectors, activated carbon filter included to neutralise odours

CURVE

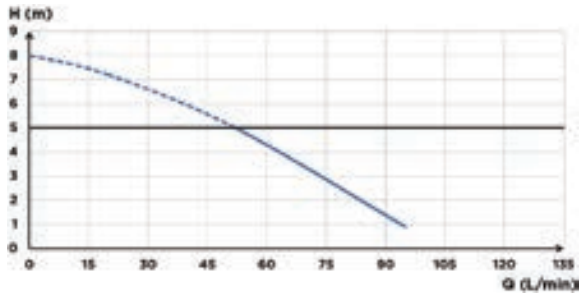

Recommended max height: 5 m

TECHNICAL FEATURES

Number of inlets	3
External inlet diameter	40, 100 mm
Discharge diameter ext.	22/28/32 mm
Max. incoming temperature	35°C
Min. shower tray height	130 mm
Installation in relation to the WC bowl	max. 500 mm
Voltage / Frequency	220-240 50-60 Hz
Motor power	400 W
IP Rating	IP44
Electrical class	I
Noise level	47 dB(A)
Identification and logistics	
Gross weight	7 kg
Barcode	3308815074078
Product code	**6052**

OPTIONAL EXTRAS

Descaler
Barcode: 3308819899011
Product code: 1085

See page 30



DIMENSIONS

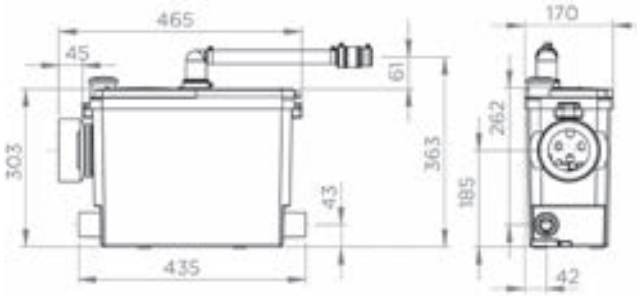

Dimensions (mm)

Saniaccess 1



5 m

100 m

DOMESTIC ONLY · DOMESTIC ONLY

2-year warranty

See page 9

PRODUCT FEATURES & BENEFITS

- Macerator for a single WC
- Easy maintenance with double access to the product
- Ideal for rental properties
- Not suitable for replacement of a different Saniflo unit as inlet heights are different

CONNECTIONS

External discharge diameter: 22/28/32 mm

External inlet diameter: 40, 100 mm

- Direct access to the basket in case of blockage due to improper use of the device without dismantling the device and without emptying the tank





Single blade cutter

PACK CONTAINS

Saniaccess unit, non-return valve, connectors, activated carbon filter included to neutralise odours

CURVE

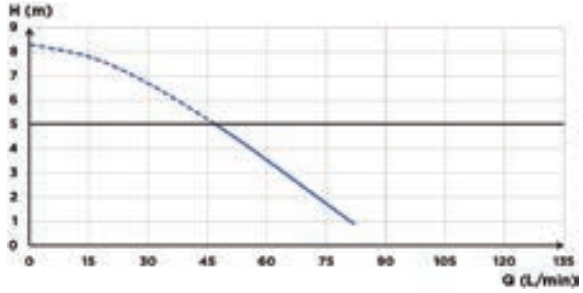

Recommended max height: 5 m

TECHNICAL FEATURES

Number of inlets	1
External inlet diameter	40, 100 mm
Discharge diameter ext.	22/28/32 mm
Max. incoming temperature	35°C
Activation level	95 mm
Voltage / Frequency	220-240 50-60 Hz
Motor power	400 W
IP Rating	IP44
Electrical class	I
Noise level	46 dB(A)
Identification and logistics	
Gross weight	7 kg
Barcode	3308815013169
Product code	**1900**

OPTIONAL EXTRAS

Descaler
Barcode: 3308819899011
Product code: 1085



See page 30

DIMENSIONS

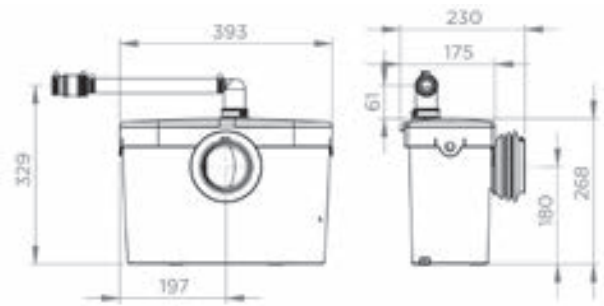

Dimensions (mm)

Saniaccess 2



5 m

100 m

2-year warranty

See page 9

PRODUCT FEATURES & BENEFITS

- Macerator for a single WC and wash basin
- Easy maintenance with double access to the product
- Ideal for rental properties
- Not suitable for replacement of a different Saniflo unit as inlet heights are different

CONNECTIONS

External discharge diameter: 22/28/32 mm

External inlet diameter: 40, 100 mm

- Direct access to the basket in case of blockage due to improper use of the device without dismantling the device and without emptying the tank





Single blade cutter

PACK CONTAINS

Saniaccess unit, non-return valve, connectors, activated carbon filter included to neutralise odours

CURVE

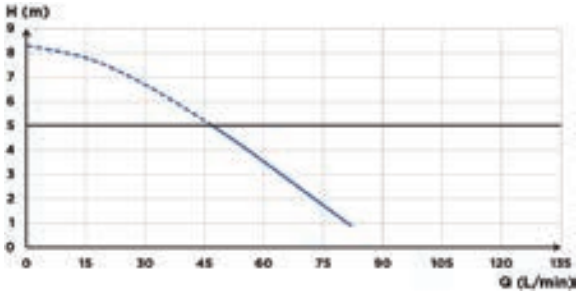

Recommended max height: 5 m

TECHNICAL FEATURES

Number of inlets	3
External inlet diameter	40, 100 mm
Discharge diameter ext.	22/28/32 mm
Max. incoming temperature	35°C
Activation level	95 mm
Voltage / Frequency	220-240 50-60 Hz
Motor power	400 W
IP Rating	IP44
Electrical class	I
Noise level	46 dB(A)
Identification and logistics	
Gross weight	7 kg
Barcode	3308815013176
Product code	**1901**

OPTIONAL EXTRAS

Descaler
Barcode: 3308819899011
Product code: 1085



See page 30

DIMENSIONS

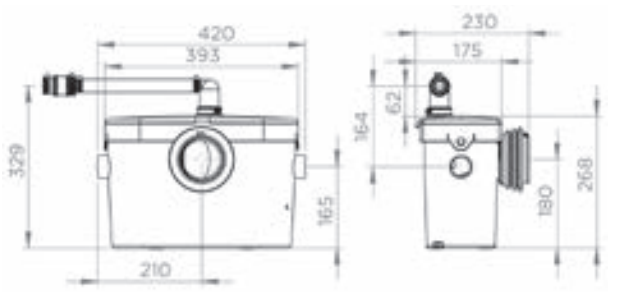

Dimensions (mm)

Saniaccess 3



5 m

100 m

DOMESTIC ONLY

2-year warranty

See page 9

PRODUCT FEATURES & BENEFITS

- Macerator for a single WC, wash basin, shower and bidet
- Easy maintenance with double access to the product
- Ideal for rental properties
- Not suitable for replacement of a different Saniflo unit as inlet heights are different

CONNECTIONS

External discharge diameter: 22/28/32 mm

External inlet diameter: 40, 100 mm

- Direct access to the basket in case of blockage due to improper use of the device without dismantling the device and without emptying the tank





Single blade cutter

PACK CONTAINS

Saniaccess unit, non-return valve, connectors, activated carbon filter included to neutralise odours

CURVE

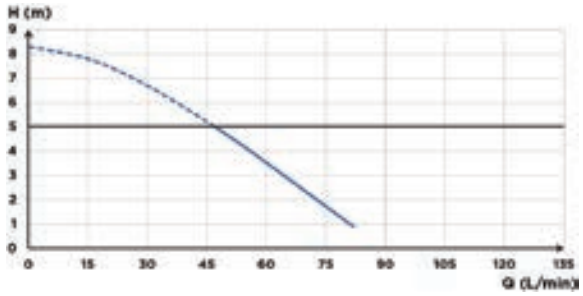

Recommended max height: 5 m

TECHNICAL FEATURES

Number of inlets	4
External inlet diameter	40, 100 mm
Discharge diameter ext.	22/28/32 mm
Max. incoming temperature	35°C
Min. shower tray height	150 mm
Activation level	95 mm
Voltage / Frequency	220-240 50-60 Hz
Motor power	400 W
IP Rating	IP44
Electrical class	I
Noise level	46 dB(A)
Identification and logistics	
Gross weight	7 kg
Barcode	3308815013183
Product code	**1902**

OPTIONAL EXTRAS

Descaler
Barcode: 3308819899011
Product code: 1085

See page 30



DIMENSIONS

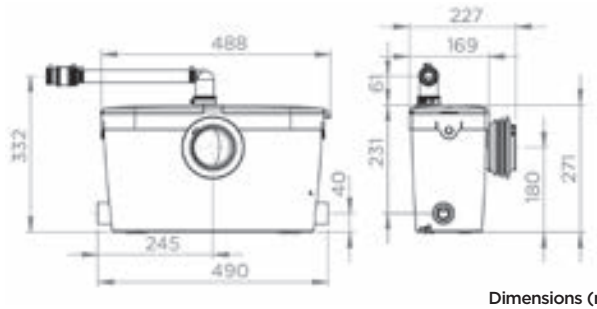

Dimensions (mm)

Descaler

To ensure the long life of your appliance, you are advised to regularly descale and clean the macerator and the toilet bowl.

This special sanitising cleaner and descaler is perfectly designed to descale your unit without harming any of the internal components. 5 L = 5 uses.

Product code: 1085
Barcode: 3308819899011



5 REASONS TO USE THE DESCALER:

- Specially designed to keep the rubber components intact
- A formula perfectly suited to small diameter pipework
- Product suitable for septic tanks
- Formula and dosage tested in laboratory
- Manufactured by Saniflo and is suitable for all our products

HOW IS THE DESCALER USED?

1 BEFORE USING THE DESCALER: **DISCONNECT THE ELECTRICITY SUPPLY TO THE MACERATOR**

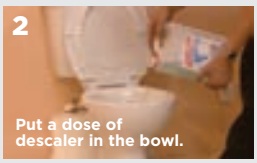
2 Put a dose of descaler in the bowl.

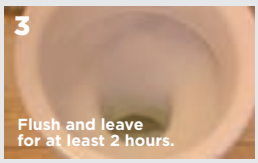
3 Flush and leave for at least 2 hours.

4 **RECONNECT THE ELECTRICITY SUPPLY TO THE MACERATOR**

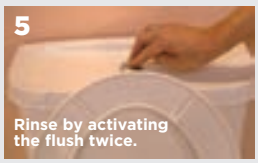
5 Rinse by activating the flush twice.

Sanialarm

Security, reassurance and peace of mind...

A UNIQUE CONCEPT

Occasional power outages, scaling of poorly maintained old appliances or problems with clogged pipes, cause a variation in the level of water permanently contained in a macerator or a Saniflo pump.

To provide a solution to this situation, a Sanialarm will provide an instant alert enabling you to take immediate action.

Product code: 1095
Barcode: 3308810042799



Fits several models of the range of Saniflo macerators (old and current) as well as the SANISPEED® + pump. The alarm works with 2 1.5V batteries (not supplied)

HOW IT WORKS?

The alarm is fixed on the cover of the Saniflo device. It consists of a level pressure switch which automatically triggers the alarm when the water volume exceeds the maximum level allowed. The alarm then produces a sound until it is turned off and the problem solved.

EASILY SET UP THE ALARM

BEFORE ANY HANDLING: DISCONNECT THE ELECTRICITY SUPPLY TO THE MACERATOR.


1 Insert 2 standard 1.5v batteries (not supplied) in the case.


2 Drill a hole 10 mm in diameter at the location indicated on the cover of the device.


3 Coat with silicone grease before inserting the alarm pressure switch tube.


4 Fix the alarm in the opening of the tube.


5 Switch the alarm to the ON position.



SANICOMPACT RANGE

The Sanicompact and Saniflush are toilets with built-in macerators.

The Sanicompact is a compact ceramic WC without a cistern, and because a basin can be added, it is ideal for a small cloakroom.

The Saniflush is a ceramic toilet with cistern and built-in macerator, a wash basin or shower can be added for a cloakroom or en-suite application.

Both the Sanicompact and Saniflush have a water saving push button flush system and a soft close toilet seat. The Sanicompact requires dynamic pressure of 1.7 bar water supply and ideally the basin should be connected to the right of the WC.

BEFORE





AFTER

Sanicompact



3 m

30 m

DOMESTIC ONLY · DOMESTIC ONLY

2-year warranty

See page 9

PRODUCT FEATURES & BENEFITS

- Ultra-compact toilet with built-in macerator*
- Has a depth of just 440 mm
- Able to add a wash basin to this small WC for a cloakroom
- Flow rate >100 l/min and requires a minimum dynamic pressure of 1.7 bar water supply

*Due to the compact nature of this unit it may activate during use.

CONNECTIONS

External discharge diameter: 32 mm

External inlet diameter: 40 mm



Multi-cutter disc



PACK CONTAINS

Sanicompact, non-return valve, floor fixings

CURVE

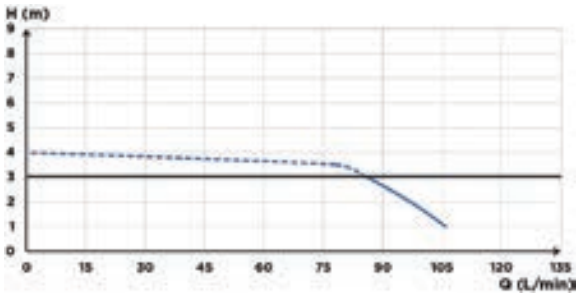

Recommended max height: 3 m

TECHNICAL FEATURES

Number of inlets	1
External inlet diameter	40 mm
Discharge diameter ext.	32 mm
Max. incoming temperature	35°C
Flush volume	1.8/3 L
Voltage / Frequency	220-240 V / 50-60 Hz
Motor power	550 W
IP Rating	IP44
Electrical class	I
Noise level	51 dB(A)
Identification and logistics	
Gross weight	25 kg
Barcode	3308815025346
Product code	**1081**

OPTIONAL EXTRAS

Descaler
Barcode: 3308819899011
Product code: 1085

See page 30



DIMENSIONS

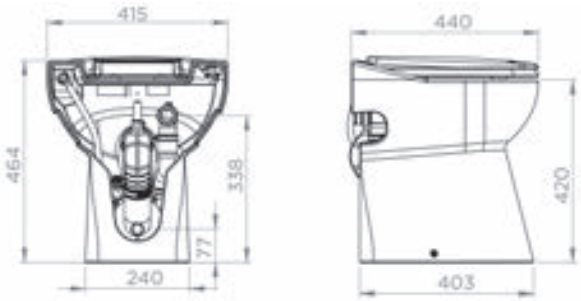

Dimensions (mm)

Saniflush



5 m

100 m

DOMESTIC ONLY

2-year warranty

See page 9

PRODUCT FEATURES & BENEFITS

- Classic design with traditional bowl base
- Easy to clean design
- Easy access to the macerator by sliding the ceramic back
- Spiral flush system 3 - 6 l
- Can add a wash basin and/or shower

CONNECTIONS

External discharge diameter: 22/32 mm

External inlet diameter: 40 mm



Single blade cutter



PACK CONTAINS

Saniflush, non-return valve, floor fixings included, removable blanking caps

CURVE

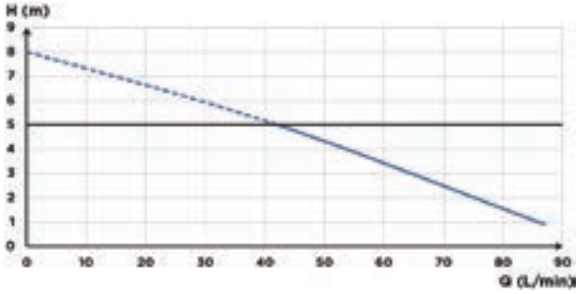

Recommended max height: 5 m

TECHNICAL FEATURES

Number of inlets	2
External inlet diameter	40 mm
Discharge diameter ext.	32 mm
Max. incoming temperature	35°C
Min. shower tray height	150 mm
Flush volume	3/6 L
Voltage / Frequency	220-240 50-60 Hz
Motor power	400 W
IP Rating	IP44
Electrical class	I
Noise level	46 dB(A)
Identification and logistics	
Gross weight	56 kg
Barcode	3308815082417
Product code	**1089**

OPTIONAL EXTRAS

Descaler
Barcode: 3308819899011
Product code: 1085

See page 30



DIMENSIONS

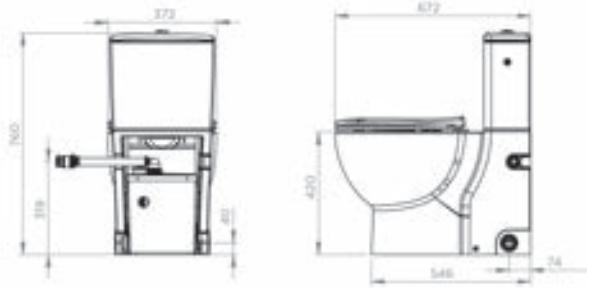

Dimensions (mm)



GREY WATER PUMPS

Saniflo offers a wide range of easy-to-install grey water pumping solutions.

Saniflo grey water pumps are ideal for creating a new bathroom, kitchen or laundry room where grey water needs to be removed, without the need for major building work.

Saniflo grey water pumps allow you to create a new room anywhere in the home, even where gravity drainage is not available.

Compact and easy to install, they can be discreetly installed inside a cupboard. Quiet in operation, they provide an ideal solution for adding a sink, basin or shower in a loft, spare room or garage.

BEFORE





AFTER



Grey water pumps

	Shower	Tray	Tray to be tiled	Shower cubicle	Bidet	Basin	Bath	Washing machine	Dish washer	Sink	Urinal
Sanishower Flat Pump and waste for low profile shower tray P.37		●		●		●					
Sanifloor + 1 Walk-in shower: pump and drain for tiled floors P.38	●										
Sanifloor + 2 Walk-in shower: pump and drain for vinyl floors P.38	●										
Sanifloor + 3 Walk-in shower: pump and drain for shower trays P.38		●									
Sanifloor + 4 Wedi® Walk-in shower: pump and drain for Wedi® tiled shower trays P.38			●								
Sanishower + Pump suitable for classic shower tray P.40		●		●	●	●					
Sanivite + Pump suitable for a domestic kitchen P.41		●		●	●	●	●	●	●	●	
Sanispeed + Pump suitable for a laundry room or kitchen (can be used in commercial situations) P.42		●		●	●	●	●	●	●	●	●
Saniaccess Pump Grey water domestic pump P.43		●		●	●	●	●	●	●	●	

- **MULTIPLE POSSIBILITIES, EASY TO INSTALL AND CAN BE USED IN SMALL SPACES**
- **A BATHROOM, A LAUNDRY ROOM, UTILITY ROOM OR KITCHEN WITHOUT MAJOR BUILDING WORK**

INSTALLING A GREY WATER PUMP

To install a bathroom, kitchen or laundry room, anything is possible with a **Saniflo pump**

You can add an en-suite, utility room, shower room or compact cloakroom without the disruption of major works. Installation requires only 22, 28 or 32 mm pipework, a simple electrical connection and a Saniflo unit.

BEFORE



AFTER



Installing a grey water shower waste pump

The installation of a shower waste pump must be carried out correctly and in accordance with the installation guide to ensure proper flow from the drain to the pump.

SLOPING INSTALLATION

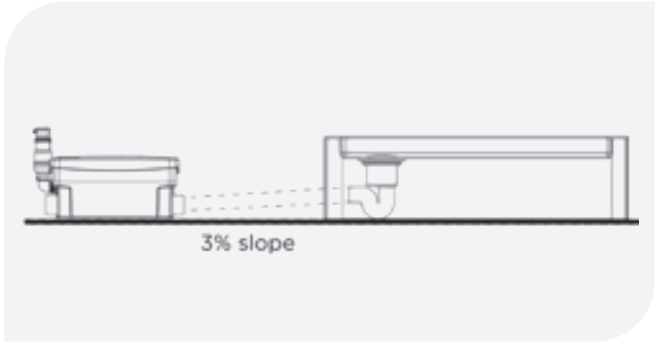

Sanishower + and Sanishower Flat

In order for the Sanishower + to work correctly and remove all the water from a shower, it is necessary to have a slope of 3% between the waste and entry into the pump.

FLAT INSTALLATION

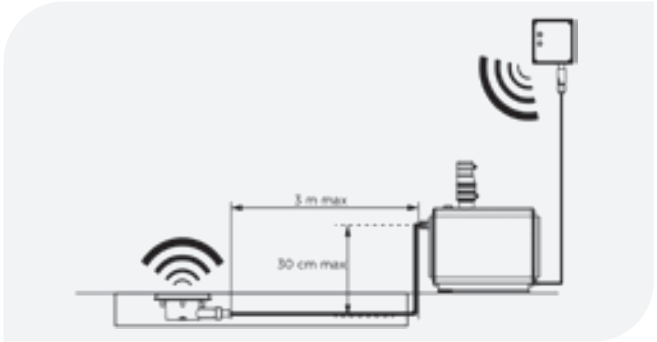

Sanifloor +

Due to its wireless detection suction pump, Sanifloor + can be installed without a slope from the waste to the pump.

Sanishower Flat



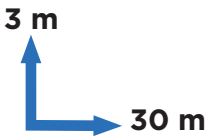

DOMESTIC ONLY · DOMESTIC ONLY

2-year warranty

See page 9

PRODUCT FEATURES & BENEFITS

- Pump and waste for low level shower tray (80 mm)
- Small pump for discreet installation
- Low level waste compatible with most shower trays

CONNECTIONS

External discharge diameter: 22/32 mm

External inlet diameter: 32 (shower), 40 (basin) mm



PACK CONTAINS

Sanishower Flat, waste, non-return valve, connectors

TECHNICAL FEATURES

Number of inlets	2
External inlet diameter	32 (shower), 40 (basin) mm
Discharge diameter ext.	22/32 mm
Max. incoming temperature	35°C
Min. shower tray height	80 mm
Activation level	30 mm
Voltage / Frequency	220-240 V / 50-60 Hz
Motor power	250 W
IP Rating	IP44
Electrical class	I
Identification and logistics	
Gross weight	5 kg
Barcode	3308815061016
Product code	**1043/3**

CURVE

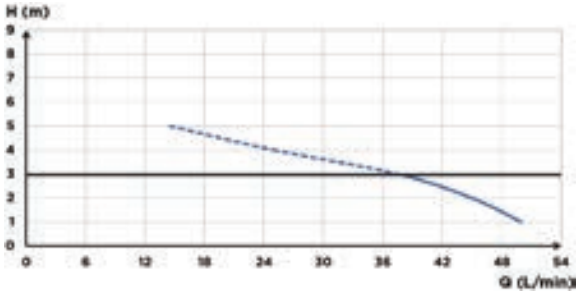

Recommended max height: 3 m

DIMENSIONS

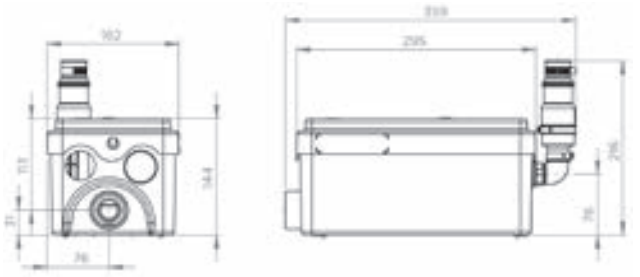

Dimensions (mm)

Sanifloor +

PATENTED TECHNOLOGY 2025



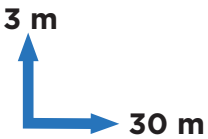

DOMESTIC ONLY

2-year warranty

See page 9

PRODUCT FEATURES & BENEFITS

- Wireless communication between pump and waste
- Easy maintenance: removable and cleanable hair drain
- Simple maintenance: replaceable detection module

CONNECTIONS

The water entering the gully automatically activates the pump using an internal drain detection system. The water is then sucked up and pumped towards the main pipe.

PACK CONTAINS

Sanifloor + pump and waste, non-return valve, floor fixings, 3 m steel spiral hose.

TECHNICAL FEATURES

	Sanifloor + 1	Sanifloor + 2	Sanifloor + 3	Sanifloor + 4
Number of inlets	1			
External inlet diameter	16 mm			
Discharge diameter ext.	32 mm			
Voltage / Frequency	220-240 V / 50-60 Hz			
Motor power	400 W			
IP Rating	IP44			
Electrical class	I			
Identification and logistics				
Gross weight	8 kg			8.5 kg
Barcode	3308815076232	3308815076249	3308815076164	3308815076256
Product code	**6154**	**6155**	**6156**	**6158**

CURVE

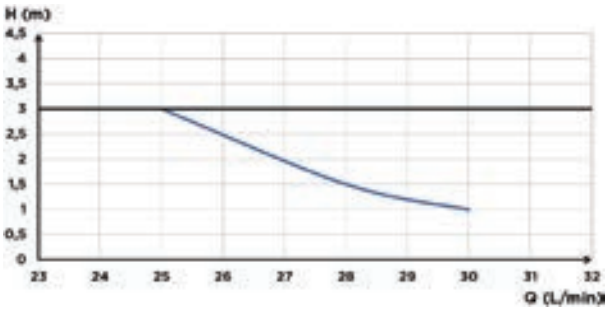

Recommended max height: 3 m

DIMENSIONS

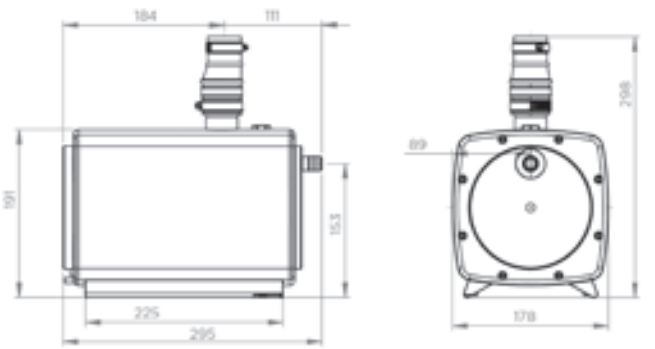

Dimensions (mm)

CONNECTIONS

External discharge diameter: 32 mm

External inlet diameter: 16 mm



INSTALLATION DIAGRAM

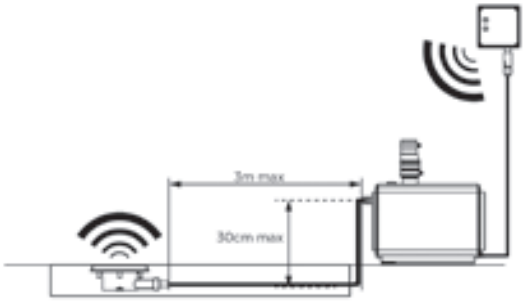

Sanifloor + 1

For tiled floors

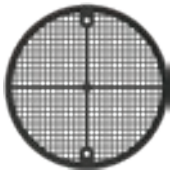

Removable hair drain



Barcode: 3308815076232

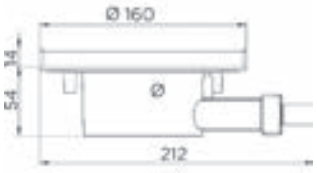

Product code: 6154

Sanifloor + 2

For vinyl floors

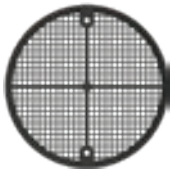

Removable hair drain



Barcode: 3308815076249

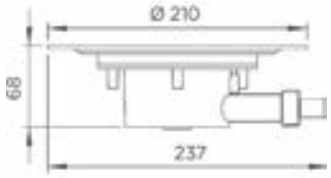

Product code: 6155

Sanifloor + 3

For shower trays

Removable hair drain



Barcode: 3308815076164

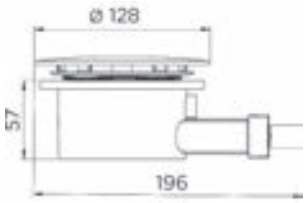

Product code: 6156

Sanifloor + 4

For Wedi® former for tiling*

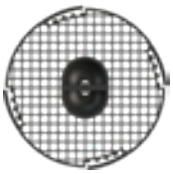

Removable hair drain



Barcode: 3308815076256

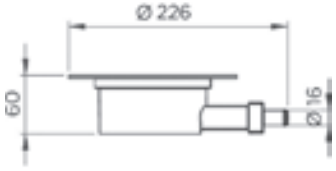

Product code: 6158

*Compatible with Wedi® – Fundo Primo, Fundo Trollo, Fundo Brogo, Fundo Nautila, Fundo Ligno.

Sanishower +



5 m

50 m

5-year warranty

See page 9

PRODUCT FEATURES & BENEFITS

- Pump suitable for shower trays
- Versatile unit with inlets on each side
- Low activation level
- Small pump that can be easily hidden from view

CONNECTIONS

External discharge diameter: 22/32 mm

External inlet diameter: 40 mm



PACK CONTAINS

Sanishower +, Non-return valve, connectors, activated carbon filter included to neutralise odours.

TECHNICAL FEATURES

Number of inlets	2
External inlet diameter	40 mm
Discharge diameter ext.	22/32 mm
Max. incoming temperature	35°C
Min. shower tray height	120 mm
Activation level	65 mm
Voltage / Frequency	220-240 V / 50-60 Hz
Motor power	250 W
IP Rating	IP44
Electrical class	I
Noise level	40 dB(A)
Identification and logistics	
Gross weight	5 kg
Barcode	3308815074030
Product code	**6043**

CURVE

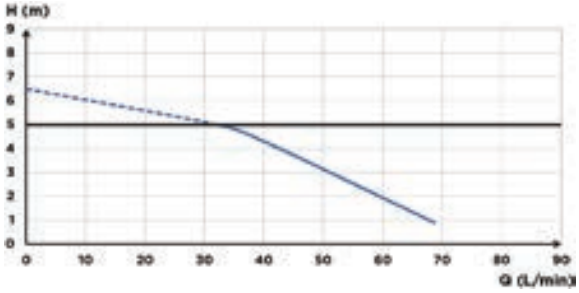

Recommended max height: 5 m

DIMENSIONS

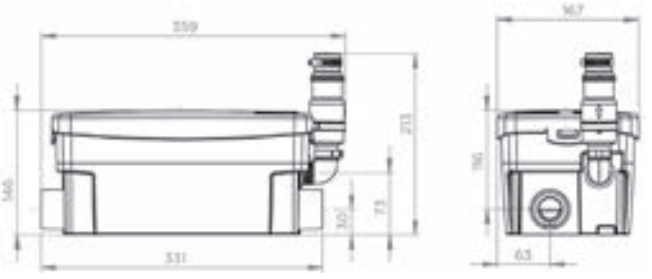

Dimensions (mm)

Sanivite +



5 m

50 m

5-year warranty

See page 9

PRODUCT FEATURES & BENEFITS

- Pump suitable for installing in a kitchen or utility room
- Low noise level
- Low activation level
- Activated carbon filter included

CONNECTIONS

External discharge diameter: 32 mm

External inlet diameter: 40 mm



PACK CONTAINS

Sanivite +, non-return valve, connectors, activated carbon filter included to neutralise odours

CURVE

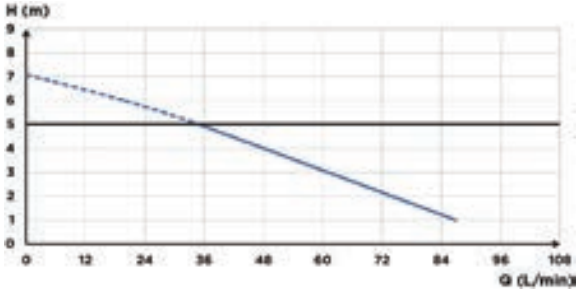

Recommended max height: 5 m

TECHNICAL FEATURES

Number of inlets	4
External inlet diameter	40 mm
Discharge diameter ext.	32 mm
Max. incoming temperature	60°C intermittently (max. 5 min)
Min. shower tray height	150 mm
Activation level	95 mm
Voltage / Frequency	220-240 50-60 Hz
Motor power	400 W
IP Rating	IP44
Electrical class	I
Noise level	42 dB(A)
Identification and logistics	
Gross weight	6 kg
Barcode	3308815074085
Product code	**6004**

OPTIONAL EXTRAS

Sanialarm
Barcode: 3308810042799
Product code: 1095

See page 30



DIMENSIONS

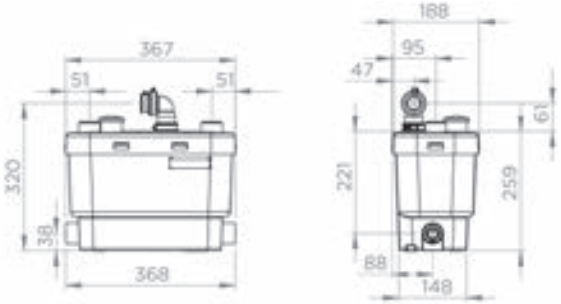

Sanispeed +



7 m

70 m

5-year warranty

See page 9

PRODUCT FEATURES & BENEFITS

- Pump suitable for commercial kitchen installation
- Low activation level
- Compatible with water softeners

CONNECTIONS

External discharge diameter: 32 mm

External inlet diameter: 40 mm



PACK CONTAINS

Sanispeed +, non-return valve, connectors, activated carbon filter included to neutralise odours

CURVE

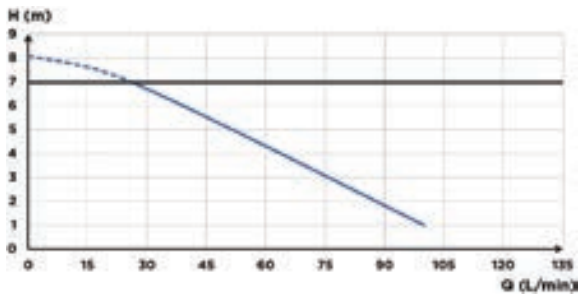

Recommended max height: 7 m

TECHNICAL FEATURES

Number of inlets	4
External inlet diameter	40 mm
Discharge diameter ext.	32 mm
Max. incoming temperature	75°C intermittently (max. 5 min)
Min. shower tray height	150 mm
Activation level	95 mm
Voltage / Frequency	220-240 50-60 Hz
Motor power	400 W
IP Rating	IP44
Electrical class	I
Noise level	42 dB(A)
Identification and logistics	
Gross weight	7 kg
Barcode	3308815074054
Product code	**6045**

OPTIONAL EXTRAS

Sanialarm
Barcode:
3308810042799
Product code:
1095

See page 30



Sanigrease T40/T60/T80/T100
Barcode:
See page 164
Product code:
See page 164



DIMENSIONS

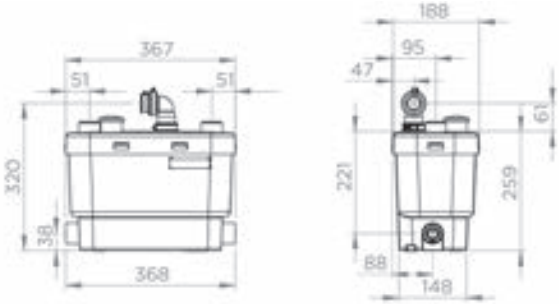

Dimensions (mm)

Saniaccess Pump



5 m

50 m

DOMESTIC ONLY · DOMESTIC ONLY

2-year warranty

See page 9

PRODUCT FEATURES & BENEFITS

- Domestic pump for grey water
- Easy maintenance: double access to the product
- Ideal for rental properties

CONNECTIONS

External discharge diameter: 32 mm

External inlet diameter: 40 mm



PACK CONTAINS

Saniaccess Pump, non-return valve, connectors, activated carbon filter included to neutralise odours

TECHNICAL FEATURES

Number of inlets	3
External inlet diameter	40 mm
Discharge diameter ext.	32 mm
Max. incoming temperature	75°C intermittently (max. 5 min)
Min. shower tray height	150 mm
Activation level	95 mm
Voltage / Frequency	220-240 V / 50-60 Hz
Motor power	400 W
IP Rating	IP44
Electrical class	I
Noise level	46 dB(A)
Identification and logistics	
Gross weight	7 kg
Barcode	3308815013190
Product code	**1903**

CURVE

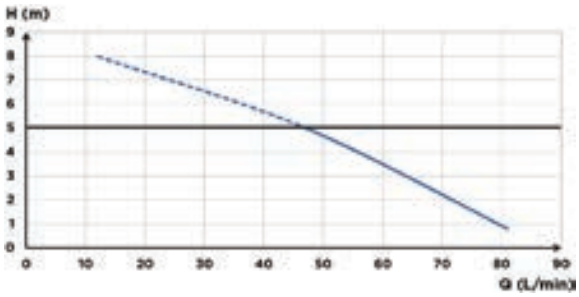

Recommended max height: 5 m

DIMENSIONS

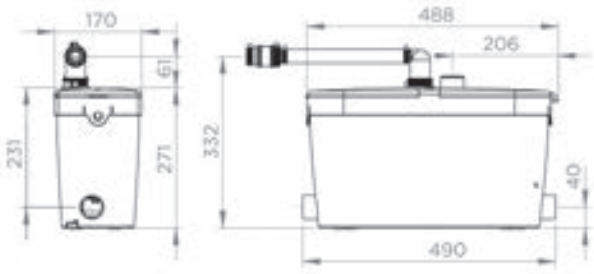

Dimensions (mm)



SANICLIM RANGE

Air conditioning units generate acidic condensate that may need to be safely removed.

Saniflo offers a range of quiet and efficient solutions for removing condensates from air conditioning units.

Ensure the pump is compatible with your air conditioning unit. As a general guideline, the condensate water discharge is typically around 0.5 to 0.8 L/h per kW of cooling capacity, though this can increase significantly in regions with very high humidity.



So, for example, for a 5 kW air conditioning unit, the volume of condensate to be drained will be 2.5 to 4 l/h.

To ensure your air conditioning unit is installed for optimal performance, pay close attention to pressure drops, including the suction height, vertical discharge height, and horizontal discharge length.

AIR CONDITIONING UNITS

Whether in offices, warehouses, or shops, air conditioning units are increasingly in demand due to high temperatures and their durability.

Once installed, it is essential to ensure longevity through maintenance in order to maintain their performance and increase their life expectancy.

Saniflo, solutions for every air conditioning unit

WALL-MOUNTED, DUCTED AND CEILING MOUNTED AIR CONDITIONING UNITS



WHO IS IT FOR?	Private individuals and commercial offices
APPLICATIONS	Living rooms, bedrooms, small commercial spaces, offices
SOLUTIONS	Sanicondens Clim Mini Sanicondens Clim Pack

CEILING CASSETTE AIR CONDITIONING UNITS



WHO IS IT FOR?	Retail, healthcare, education sectors
APPLICATIONS	Shops, warehouses, office complexes
SOLUTIONS	Sanicondens Clim Maxi

Good to know

According to regulations, air conditioning maintenance must be carried out by a professional if it is a fixed air conditioning unit with a capacity of more than 12 kW or if it contains more than 2 kg of refrigerant.



Air conditioning condensate pumps

	Air conditioning unit		Refrigerated display case	Ceiling	Dehumidifier
 **Sanicondens Clim Mini** Compact unit for a discreet installation P.47	MAXIMUM 8 kW	•		•	
 **Sanicondens Clim Pack** A compact and complete solution P.48	MAXIMUM 8 kW	•			
 **Sanicondens Clim Deco** Easy access for maintenance P.49	MAXIMUM 10 kW	•			
 **Sanicondens Clim Maxi** A powerful compact solution P.50	MAXIMUM 30 kW	•	•		•

Vertical suction in metres	Vertical discharge in metres	Horizontal discharge in metres 5	10	20	30
0	1	10.4	9.1	8.3	7.3
	2	8.9	7.8	7.0	6.4
	3	7.9	7.1	6.3	5.8
	4	7.0	6.0	5.3	4.9
1	1	8.9	8.3	7.5	5.9
	2	7.8	7.3	6.7	6.1
	3	6.9	6.7	5.7	5.4
	4	5.9	5.5	4.9	4.4
1.5	1	7.8	7.6	6.9	6.5
	2	7.1	6.6	6.2	5.7
	3	6.5	5.7	5.1	4.8
	4	5.5	4.8	4.2	3.9

Table of flows in litres/hour (+/-10%)

- **SMALL UNITS FOR DISCREET INSTALLATION**
- **QUIET OPERATION**
- **LIFTING PERFORMANCE: UP TO 6 M**
- **FIXING KIT FOR EASY ASSEMBLY**

Sanicondens Clim Mini



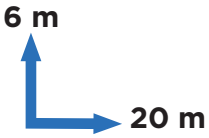

2-year warranty

See page 9

PRODUCT FEATURES & BENEFITS

- Compact unit for discreet installation
- Low noise level: only 21dB (A)
- Safety system with thermal protector and overflow alarm
- Easy to check: transparent base

INSTALLATION DIAGRAM

(A) Condensate tank
(B) Level sensor
(C) Pump unit
(D) Anti-siphoning vacuum breaker
(E) Waste water pipe

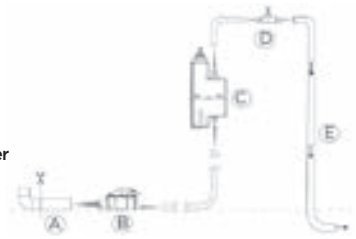

PACK CONTAINS

Sanicondens Clim Mini pump, detection unit, 1.2 m flexible hose, detector bracket, vent tube, power cable provided, anti-siphon valve

CURVE

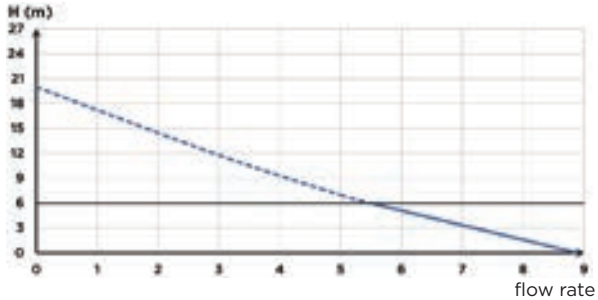

Recommended max height: 6 m

TECHNICAL FEATURES

Max. power of the boiler	8 kW
Inlet diameter DN	16 mm
Discharge diameter DN	6 mm
Max. flow rate	9 l/h +/-15%
Max. incoming temperature	35°C
Max. suction distance between the detection bloc and the pump	2 m
Voltage / Frequency	220-240 V / 50-60 Hz
Max. power consumption	22 W
IP Rating	IP24
Noise level	21 dB(A)
Identification and logistics	
Gross weight	0.6 kg
Barcode	3308815083520
Product code	**1131**

DIMENSIONS

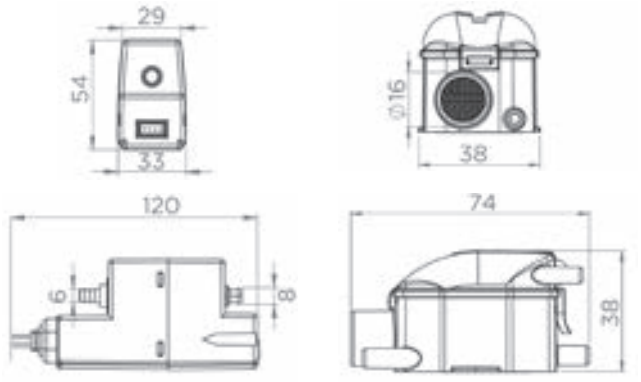

Dimensions (mm)

Sanicondens Clim Pack



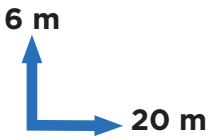

2-year warranty

See page 9

PRODUCT FEATURES & BENEFITS

- Complete solution for neat installation
- Easy installation, fixing and connection accessories are included
- Reversible plate for right or left installation

INSTALLATION DIAGRAM

(A) Condensate tank

(B) Level sensor

(C) Pump unit

(D) Anti-siphoning vacuum breaker

(E) Waste water pipe

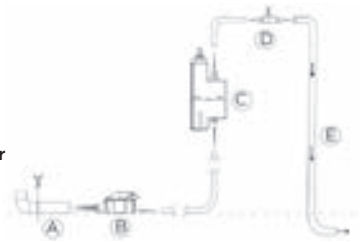

PACK CONTAINS

Sanicondens Clim pack pump, detection unit, trunking, flexible hose (1.2 m), mounting bracket, vent tube, power cable supplied

CURVE

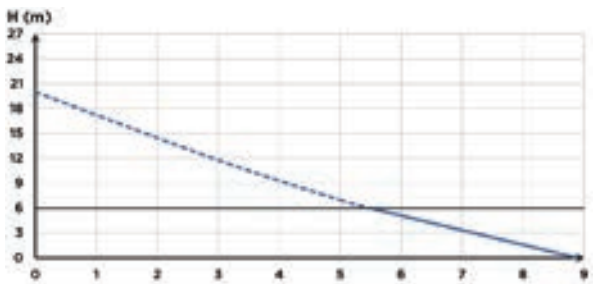

Recommended max height: 6 m

TECHNICAL FEATURES

Max. power of the boiler	8 kW
Inlet diameter DN	16 mm
Discharge diameter DN	6 mm
Max. flow rate	9 L/h +/- 15%
Max. incoming temperature	35°C
Max. suction distance between the detection block and the pump	2 m
Voltage / Frequency	220-240 V / 50-60 Hz
Max. power consumption	22 W
IP Rating	IP24
Noise level	21 dB(A)
Identification and logistics	
Gross weight	1.6 kg
Barcode	3308815083919
Product code	**1132**

DIMENSIONS

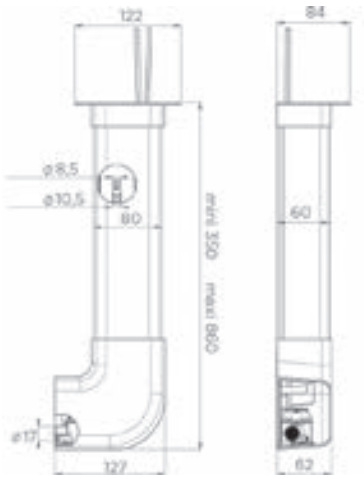

Dimensions (mm)

Sanicondens Clim Deco



6 m
20 m

6 m

2-year warranty

See page 9

PRODUCT FEATURES & BENEFITS

- Compact solution for neat installation
- Easy installation, with fixing kit supplied
- Auto-resetting thermal protector

CONNECTIONS

Discharge diameter DN: 8-10 mm

Inlet diameter DN: 22 mm



PACK CONTAINS

Sanicondens Clim Deco, wall mounting, screw cover

CURVE

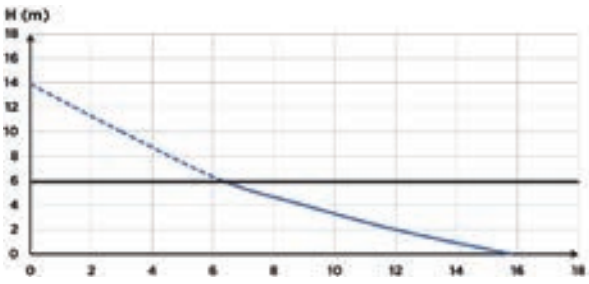

flow rate (L/m)

Recommended max height: 6 m

TECHNICAL FEATURES

Max. power of the boiler	10 kW
Number of inlets	1
Inlet diameter DN	22 mm
Discharge diameter DN (int.)	8-10 mm
Tank volume	0.175 L
Max. incoming temperature	35°C
Max. power consumption	10 kW
Voltage / Frequency	220-240 V / 50-60 Hz
IP Rating	IP24
Electrical class	II
Noise level	23 dB(A)
Identification and logistics	
Gross weight	0.9 kg
Barcode	3308815012216
Product code	**1134**

DIMENSIONS

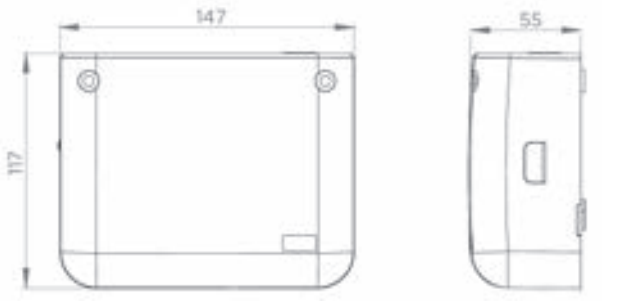

Dimensions (mm)

Sanicondens Clim Maxi

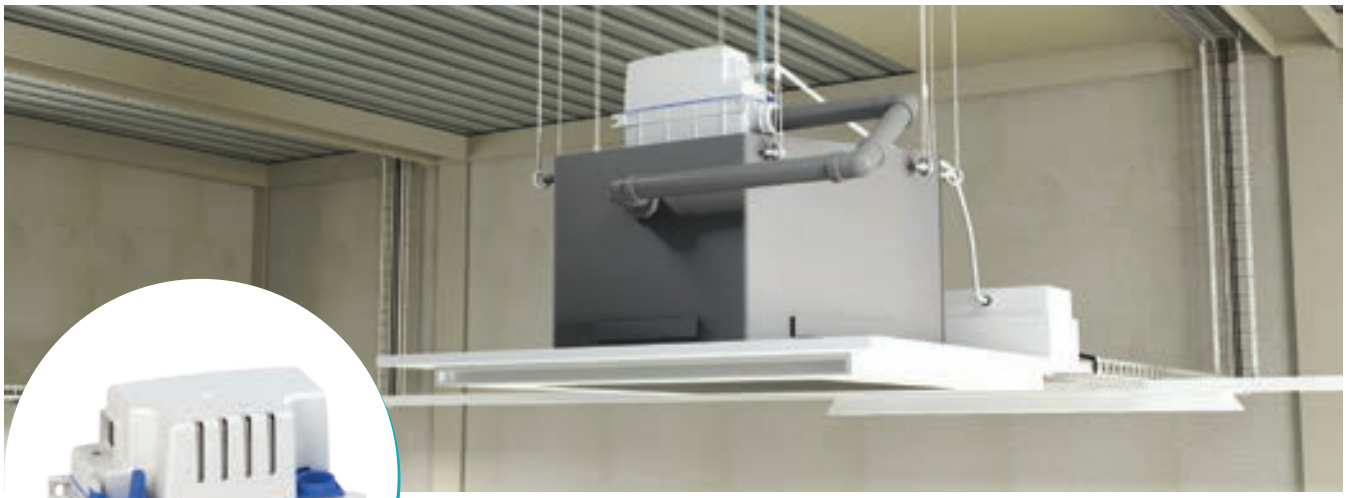

4.5 m

45 m

2-year warranty

See page 9

PRODUCT FEATURES & BENEFITS

- Compact space saving solution
- 180° reversible plate
- Suspended installation is possible
- Can be used with air conditioning units or refrigeration display cases

CONNECTIONS

Discharge diameter (int.): 10 mm

Inlet diameter DN: 28, 32 mm



PACK CONTAINS

Sanicondens Clim Maxi, power cable and connector

TECHNICAL FEATURES

Max. power of the boiler	30 kW
Number of inlets	2
Inlet diameter DN	28,32 mm
Discharge diameter (int.)	10 mm
Tank volume	1 L
Max. incoming temperature	35°C
Voltage / Frequency	220-240 V / 50-60 Hz
Max. power consumption	60 W
Maximum current	0.52 A
IP Rating	IP24
Electrical class	I
Noise level	< 45 dB(A)
Identification and logistics	
Gross weight	2 kg
Barcode	3308815090108
Product code	**1136**

CURVE

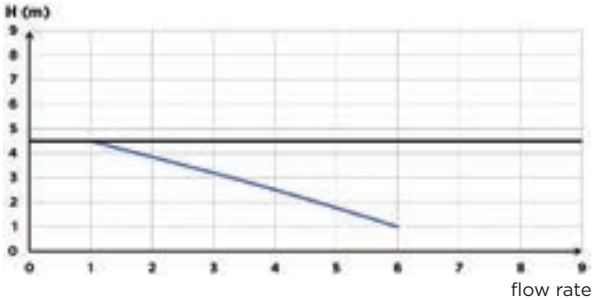

flow rate (L/m)

Recommended max height: 4.5 m

DIMENSIONS

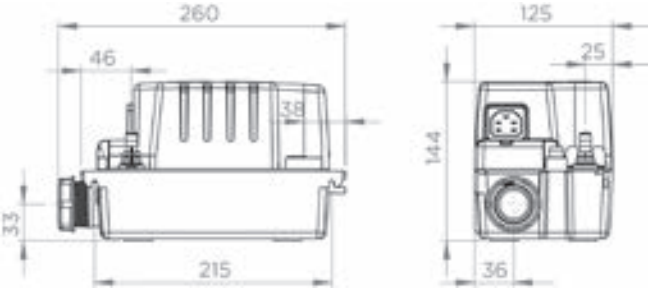

Dimensions (mm)



SANICONDENS RANGE

Boiler condensate cannot always be removed using gravity drainage alone.

This is why Saniflo offers a comprehensive range of condensate pumps for gas and oil boilers, including applications for boilers up to 80 kW.

Legally, acidic condensate can only be discharged in pipework that can handle expelled water with a pH value lower than 6.5.

Building regulations may require pre-treatment of condensate to neutralise waste. (Please see BS6798 and Building Regulations Part H for further details)

Saniflo offers a range of condensate neutralisation systems, with or without a lifting pump.





Boiler condensate removal pumps

	Gas boiler	Oil boiler	Air conditioning unit	Refrigerated display case	Dehumidifier	A/C unit with ceiling cassette
Pumps						
 **Sanicondens Deco +** Ideal for boilers installed in kitchens P.53	MAXIMUM 25 kW					
 **Sanicondens Eco** For easy lifting P.54	MAXIMUM 50 kW	MAXIMUM 30 kW with Sanineutral	•	•	•	•
 **Sanicondens Pro** Large capacity tank and alarm pre-connection neutralisation systems P.55	MAXIMUM 50 kW	MAXIMUM 30 kW with Sanineutral	•	•	•	•
Pumping system with neutralisation system						
 **Sanicondens Best Flat** Low entry for floor standing boilers P.56	MAXIMUM 80 kW	MAXIMUM 50 kW			•	
Neutralisation systems						
 **Sanineutral Mini** Ideal for boilers installed in kitchens P.57	MAXIMUM 25 kW					
 **Sanineutral** Suitable for wall and floor boilers P.58	MAXIMUM 50 kW	MAXIMUM 35 kW				

- COMPACT AND DISCREET UNITS FOR EASY INSTALLATION
- FIXING KIT FOR EASY INSTALLATION
- SEVERAL INLETS AVAILABLE FOR GREATER FLEXIBILITY OF INSTALLATION

Sanicondens Deco +



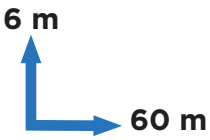

2-year warranty

See page 9

PRODUCT FEATURES & BENEFITS

- Compact design for an aesthetic installation
- Ideal for collecting condensate from a boiler installed in a kitchen
- Easy installation: fixing kit supplied

CONNECTIONS

Discharge diameter (int.) : 8-10 mm

Inlet diameter DN : 22 mm



PACK CONTAINS

Sanicondens Deco +, wall mounting, screw covers

TECHNICAL FEATURES

Max. power of boiler	Gas 25 kW
Number of inlets	1
Inlet diameter DN	22
Discharge diameter (int.)	8-10 mm
Tank volume	0.175 L
Max. incoming temperature	55°C (S3 15%)
Voltage / Frequency	220-240 V / 50-60 Hz
Max. power consumption	22 W
IP Rating	IP24
Electrical class	II
Noise level	< 25 dB(A)
Identification and logistics	
Gross weight	0.4 kg
Barcode	3308815075389
Product code	**1135**

CURVE

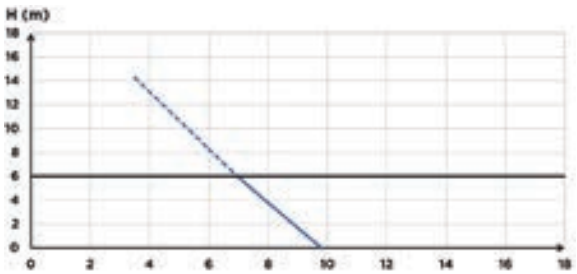

flow rate (L/m)

Recommended max height: 6 m

DIMENSIONS

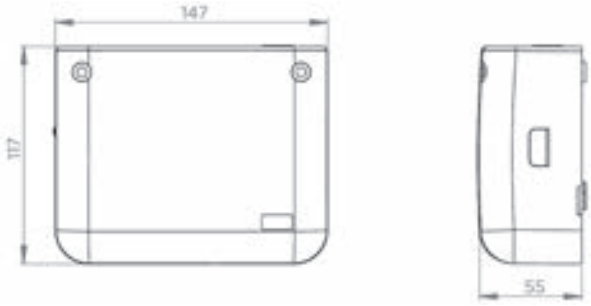

Dimensions (mm)

Sanicondens Eco



4.5 m

50 m

2-year warranty

See page 9

PRODUCT FEATURES & BENEFITS

- Compact and quiet solution
- Connections possible with gas and oil boilers (using the Saineutral or Saineutral Mini), floor and wall-mounted units, refrigerated display cabinets, air conditioning units and dehumidifiers
- Easy installation: fixing kit supplied

CONNECTIONS

Discharge diameter (int.): 10 mm

Inlet diameter DN: 28 mm



PACK CONTAINS

Sanicondens Eco, non-return valve, fixing screws, 1 inlet adapter, 1 discharge hose (5 m), 1 power cable 1.5 m, 1 outlet adapter

TECHNICAL FEATURES

Max. power of boiler	Oil 30, Gas 50 kW
Number of inlets	2
Inlet diameter DN	28 mm
Discharge diameter (int.)	10 mm
Tank volume	2.2 L
Max. incoming temperature	80°C (S3 15%)
Voltage / Frequency	220-240 V / 50-60 Hz
Max. power consumption	60 W
Maximum current	0.52 A
IP Rating	IP24
Electrical class	I
Noise level	< 45 dB(A)
Identification and logistics	
Gross weight	2.8 kg
Barcode	3308815083681
Product code	**1141**

CURVE

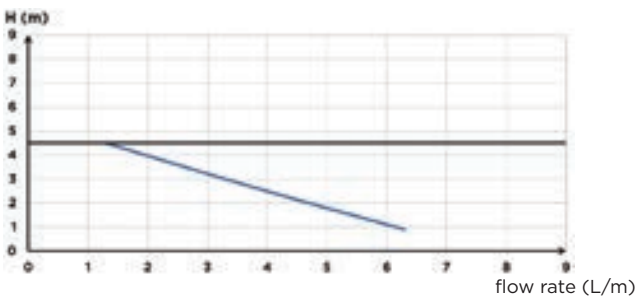

Recommended max height: 4.5 m

DIMENSIONS

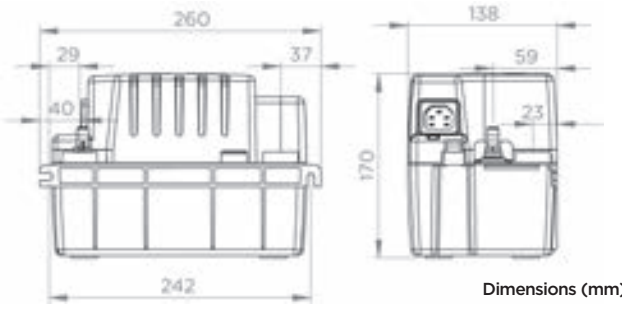

Dimensions (mm)

Sanicondens Pro



4.5 m

50 m

2-year warranty

See page 9

PRODUCT FEATURES & BENEFITS

- Compact and quiet solution
- Suitable for use with gas and oil boilers (using Sanineutral or Sanineutral Mini), floor and wall mounted boilers, refrigerated display cabinets, air conditioning units and dehumidifiers
- Easy installation: fixing kit supplied

CONNECTIONS

Discharge diameter (int.): 10 mm

Inlet diameter DN: 28 mm

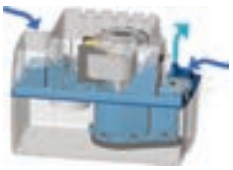

PACK CONTAINS

Sanicondens Pro, non-return valve included, fixing screw, 1 inlet adapter, 1 outlet adapter (Ø 50 mm), 1 discharge hose (5 m), 1 power cable (1.5 m), 1 rubber stopper, 1 alarm pre-connection cable

TECHNICAL FEATURES

Max. power of boiler	Oil 30, Gas 50 kW
Number of inlets	2
Inlet diameter DN	28 mm
Discharge diameter (int.)	10 mm
Tank volume	2.2 L
Max. incoming temperature	80°C (S3 15%)
Voltage / Frequency	220-240 V / 50-60 Hz
Max. power consumption	60 W
Maximum current	0.52 A
IP Rating	IP24
Electrical class	I
Noise level	< 45 dB(A)
Identification and logistics	
Gross weight	3 kg
Barcode	3308815083674
Product code	**1140**

CURVE

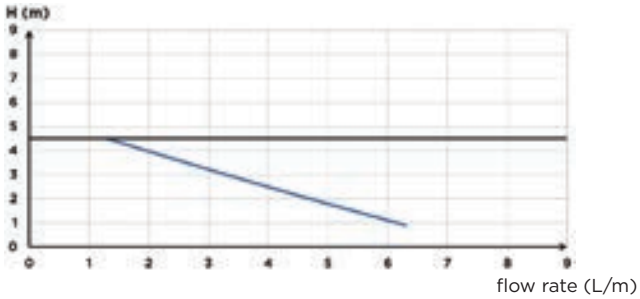

flow rate (L/m)

Recommended max height: 4.5 m

DIMENSIONS

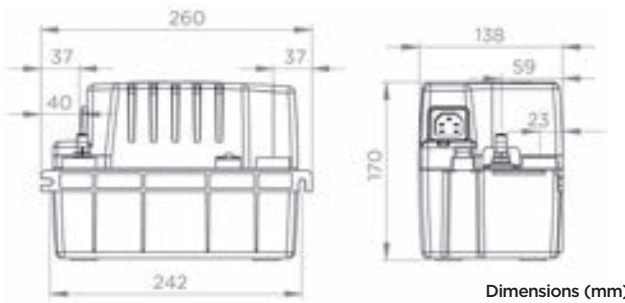

Dimensions (mm)

Sanicondens Best Flat



4.5 m

50 m

2-year warranty

See page 9

PRODUCT FEATURES & BENEFITS

- Low inlet at 47mm for floor standing boiler
- Integrated neutralisation system to protect pipes from acidic water
- Transparent cover, to check the neutralisation granules
- Easy installation: fixing kit supplied'

CONNECTIONS

Discharge diameter (int.): 10 mm

Inlet diameter DN: 28 mm



PACK CONTAINS

Sanicondens Best Flat, wall mounting, non-return valve, fixing screws, 1 inlet adapter (Ø 32/40 mm), 1 outlet adapter (Ø 50 mm), 1 discharge hose of 5 m Ø int: 10 mm, 1 power and alarm cable of 1.5 m, 1 bag of neutralising granules

CURVE

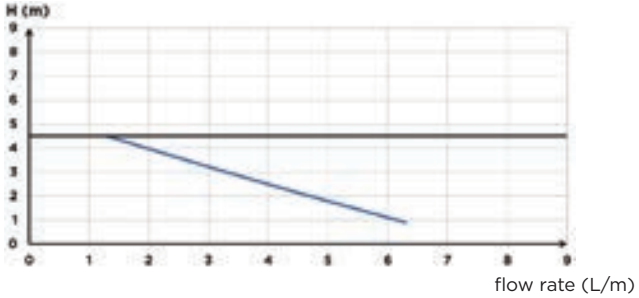

flow rate (L/m)

Recommended max height: 4.5 m

TECHNICAL FEATURES

Max. power of boiler	Oil 50, Gas 80 kW
Number of inlets	2
Inlet diameter DN	28 mm
Discharge diameter (int.)	10 mm
Tank volume	3.5 L
Max. incoming temperature	80°C (S3 15%)
Voltage / Frequency	220-240 V / 50-60 Hz
Max. power consumption	60 W
Maximum current	0.52 A
IP Rating	IP24
Electrical class	I
Noise level	< 45 dB(A)
Identification and logistics	
Gross weight	4.7 kg
Barcode	3308815081410
Product code	**1142**

OPTIONAL EXTRAS

Replacement granules
Barcode : 3308815011134
Product code: SACHGRANULE



DIMENSIONS

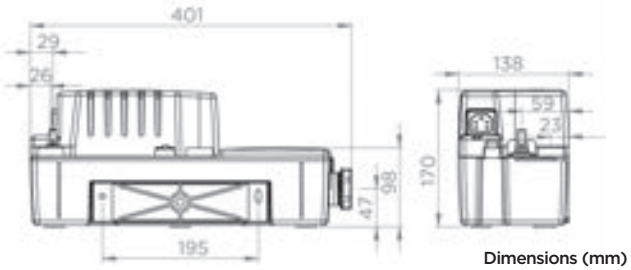

Dimensions (mm)

Sanineutral Mini



PRODUCT FEATURES & BENEFITS

- Compact solution with clear window for easy control of granules
- Preserves pipes from acid attack
- Easy maintenance: removable cover without disconnecting pipework
- Easy installation: fixing kit supplied

INSTALLATION DIAGRAM

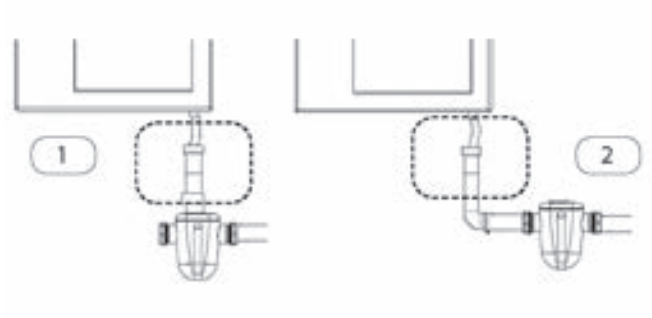

1 and 2: compulsory air intake (at inlet)

PACK CONTAINS

Sanineutral Mini, built-in siphon, wall mounting brackets, neutralisation granules 1.2 kg

TECHNICAL FEATURES

Max. power of boiler	Gas 25 kW
Number of inlets	2
Diameter of upper inlet	32/40 mm
Diameter of the side entry	32 mm
Minimum Ph	2.5
Identification and logistics	
Gross weight	1 kg
Barcode	3308815075778
Product code	**1082/3**

OPTIONAL EXTRAS

Replacement granules
Barcode : 3308815011134
Product code: SACHGRANULE



DIMENSIONS

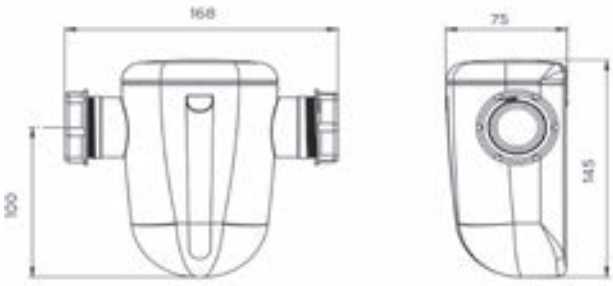

Dimensions (mm)

Sanineutral



2-year warranty

See page 9

PRODUCT FEATURES & BENEFITS

- Transparent unit which allows easy control of the granules
- Preserves the pipes from acid attacks
- Easy maintenance: removable cover without having to disconnect the pipes
- Easy installation: fixing kit supplied

INSTALLATION DIAGRAM

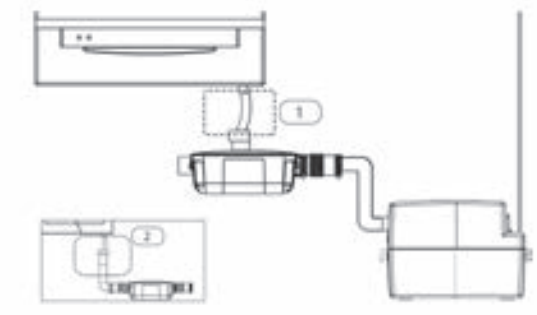

1 and 2: compulsory air intake (at inlet)

PACK CONTAINS

Inlet and outlet fittings, fixing brackets, floor installation kit

TECHNICAL FEATURES

Max. power of boiler	Oil 35, Gas 50 kW
Number of inlets	2
Diameter of upper inlet	28/32/40 mm
Diameter of the side entry	40 mm
Minimum Ph	2.5
Identification and logistics	
Gross weight	2 kg
Barcode	3308815060927
Product code	**1082/4**

OPTIONAL EXTRAS

Replacement granules
Barcode : 3308815011134
Product code: SACHGRANULE



DIMENSIONS

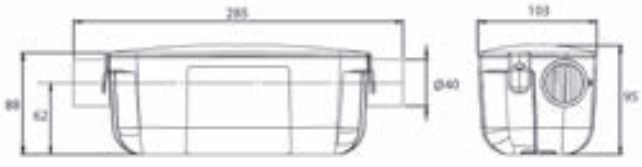

Dimensions (mm)



FLOOR STANDING & UNDERGROUND LIFTING STATIONS

Saniflo offers a wide range of floor standing and underground lifting stations for both domestic and commercial applications. Whether for a complete property, a change of use, an extension, or a garden office, there is a solution to suit every project.

Saniflo pumps and lifting stations offer flexible installation almost anywhere in or around the property, catering for multiple rooms and appliances. With expert advice from our UK-based technical team, you can be confident in selecting the right solution for any project, big or small.

Our full range of stations

SFA Saniflo offers a wide range of lifting stations for all of your projects: including lifting stations for grey water, black water or rainwater, that can be used above or below ground, in single-phase or three-phase versions.

The performance of our products and your specific project will determine the right product for you.

Our floor standing stations

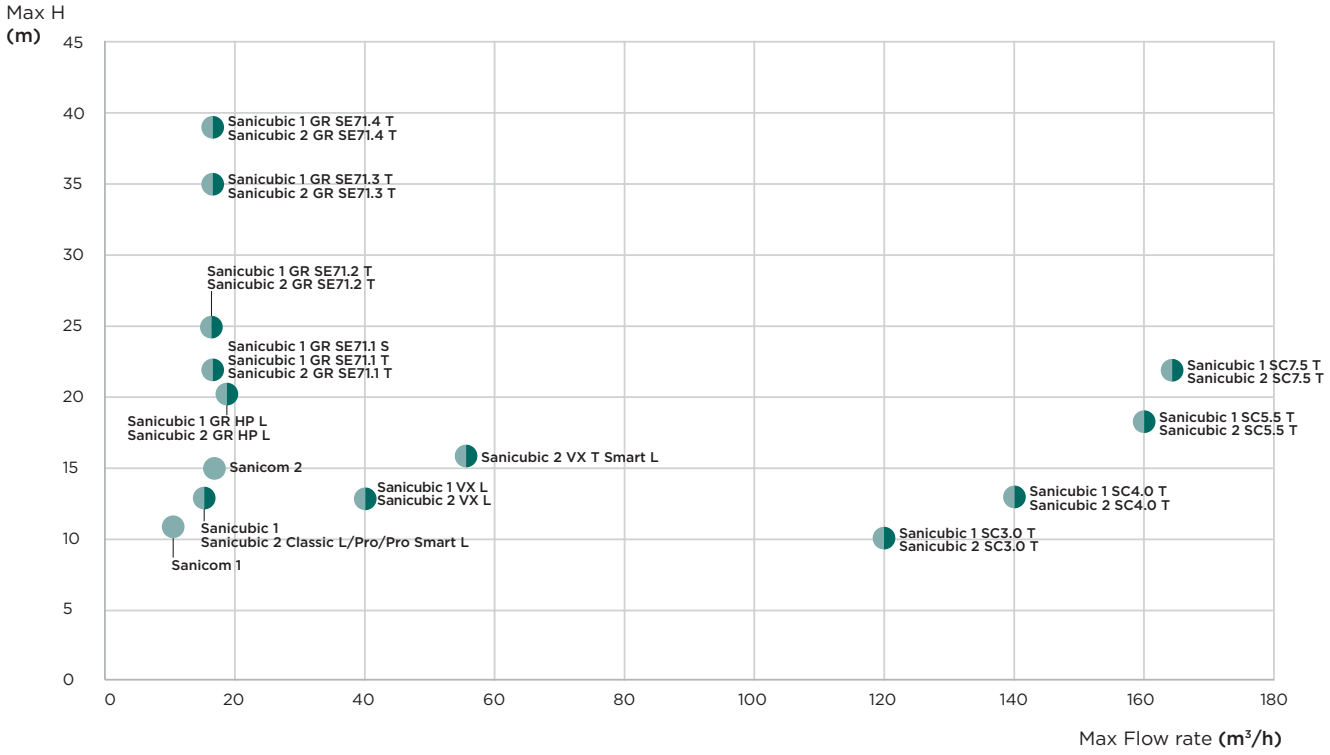

Our underground stations

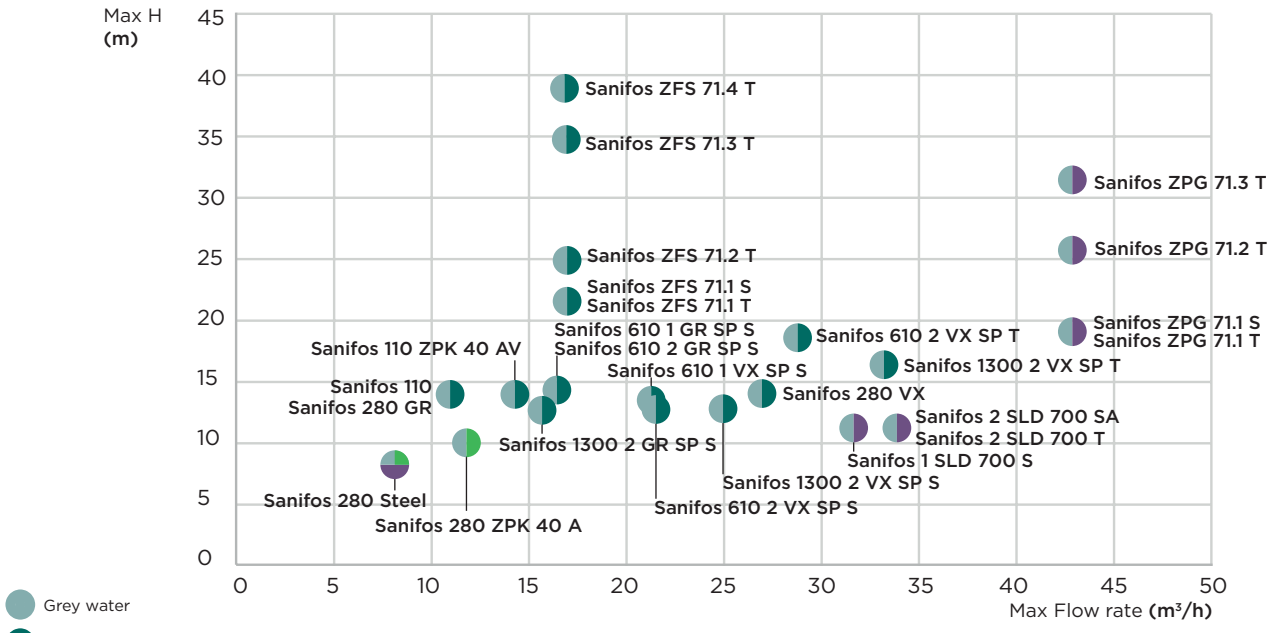

The data indicated corresponds to the maximum values of Flow and Head

Help in choosing the right lifting station

1 DETERMINE THE PEAK FLOW RATE (Q)

This is the volume of water to be drained per unit of time depending upon the type and number of appliances connected to the lifting station.

The flow rate can be expressed in cubic metres per hour (m^3/h) or in litres per second (l/s).

In the examples shown we have taken one house to comprise of: 1 WC, 1 bath, 1 shower, 1 wash basin, 1 sink, 1 washing machine, 1 dishwasher.

Estimated flow

Number of houses	Flow
1 house (1 to 3 inhabitants)	**2.5 m^3/h**
Up to **2 dwellings** (4 to 6 inhabitants)	**5 m^3/h**
Up to **4 dwellings** (7 to 9 inhabitants)	**10 m^3/h**
Up to **6 dwellings** (10 to 12 inhabitants)	**15 m^3/h**

2 CALCULATE TOTAL HEAD

The total head corresponds to the pressure the pump will have to provide between the suction and discharge point.

Total head = Geometric height + Pressure drop
Static head This is the delivery height (expressed in metres of water column).
Dynamic head This is the sum of pressure losses in the discharge line (expressed in metres of water column).

There are 2 types of pressure drop:

- Major pressure loss from friction of fluid against the walls of the discharge pipe
- Minor pressure loss from components such as elbows, non-return valves etc.

They must be added to the static head to determine the total head.

The value obtained in this table is to be multiplied by the total length of the evacuation pipe to obtain the pressure loss.

For help with your calculations or for further advice please speak to our technical team on 020 8842 0033.

Pressure drop table

Flow in m^3/h	DN PN10 pressure PVC piping							
	DN 32 36.2/40	DN 40 45.2/50	DN 50 57/63	DN65 67.8/75	DN 80 81.4/90	DN 100 101.6/110	DN 125 129.2/140	DN 150 147.6/160
2	0.011							
3	0.022	0.008						
4	0.037	0.013						
5	0.054	0.019	0.006					
6	0.075	0.026	0.009					
7	0.099	0.034	0.011					
8	0.126	0.043	0.014	0.006				
9		0.054	0.018	0.008				
10		0.065	0.021	0.009				
12		0.090	0.029	0.013	0.005			
15			0.044	0.019	0.008			
20				0.032	0.013	0.005		
25				0.048	0.020	0.007		
30					0.028	0.010		
40						0.016	0.005	
50						0.024	0.008	
60						0.033	0.01	0.006
70						0.044	0.014	0.007
80						0.056	0.018	0.009
90							0.022	0.011
100							0.026	0.014
120							0.037	0.019
150								0.029

3 CHOOSE A STATION

Having worked out the head and flow rate, you can now select the station you need: see page 68 for floor standing stations and page 98 for underground stations. If you need any help in this you can contact our technical team on 020 8842 0033.

Selection example

A customer wishes to install a lifting station for all waste water in the boiler room of his communal housing building, comprising two dwellings. The height between the ground where the station will be placed and the sewer is 4 m. The total length of piping is 10 m in PVC DN 40 (external Ø 50 mm).

1 Estimate Q: from the table Q = 5 m^3 / h

2 Calculation of head: Height = 4 m, Pressure drop = 0.019 x 10 = 0.19 m, Total head = 4 + 0.19 = 4.19 m

3 Choice of product: For floor installation, Sanicubic 1 and 2 pumps up to 13 m and allowing a flow rate of 15 m^3/h may be suitable. Sanicubic 2 has two motors operating alternately as well as an additional inlet.





PRO X K2 KNIFE

Sanicubic 1 L
Sanicubic 2 Classic L
Sanicubic 2 Pro/2 Pro Smart L
Sanicubic 1 GR HP L
Sanicubic 2 GR HP L
Sanifos 110/280/610/1300
Sanipump GR



PRO X K3 EXPANSION WHEEL

Sanicubic 1 GR
Sanicubic 2 GR
Sanifos 1600/2100/3100
Sanipump ZFS 71



CLOSED IMEPLLER

Sanicom 1
Sanicom 2





VORTEX IMPELLER KX V6

Sanicubic 1 VX L
Sanicubic 2 VX L
Sanifos 280/610/1300
Sanifos 1600/2100/3100
Sanipump VX
Sanipump VX 50
Sanipump VX 65/80



SINGLE CHANNEL IMPELLER

Sanicubic 1 SC
Sanicubic 2 SC



BICANAL IMPELLER

Sanifos 1600/2100/3100
Sanipump ZPG 71



BICANAL IMPELLER

Sanifos 610
Sanipump SLD 700

Hydraulic technologies

From expertise to performance

Hydraulic systems are the basis for the power of pump flow. They allow the proper circulation of fluids and loads while ensuring efficient and controlled lifting.

SFA is constantly innovating to develop new technologies adapted to each type of fluid and to each lifting condition, thus ensuring optimal pump performance and durability.

SFA PumpSelect
Quick and easy sizing

SFA PumpSelect is sizing software, to help you select the right pump for your project.



Hydraulic selection

using duty point as a selection basis

The hydraulic selection allows the sizing and configuration of the pumps according to the installation conditions and needs, the type of effluent and the characteristics of the discharge system. SFA PumpSelect can handle multiple duty points regardless of the effluent.

Direct product selection by name

SFA PumpSelect offers the possibility of direct pump selection based on pump name and type. Once the pump is selected, the same functions as for hydraulic selection are possible. With this method, an operating point can then be defined, allowing the configuration to be used for specific operating conditions.

QuickSelector for fast and qualified hydraulic selection

It is also possible to size pumps quickly and easily by entering the desired duty point with the quick search. After entering the Q-value (flow rate), H-value (head) and the nominal frequency, suitable solutions are suggested and keywords can be used to narrow down the choice. Specific operating conditions can be specified, as well as the hydraulic selection mode.

Application available on sfasaniflo.co.uk Professional section, no software installation required.

Floor standing lifting stations

Floor standing lifting stations provide several key benefits, such as simplified installation, cost efficiency and ease of maintenance access. Designed to handle both black and grey water applications, they can be installed in a variety of locations depending on site conditions and project requirements.



Sanicom Grey water

- For sinks, dishwashers, glass rinsers, washing machines (bakeries, shops, bars, hair salons etc)
- Bathrooms with sinks, showers, urinals (sports halls, restaurants, offices. NOT for WC waste)
- High temperature condensates (bread ovens)
- Boiler water / softeners



Sanicubic – Grinder Black water

- Individual houses
- House extensions, summer houses
- Business extensions (creation of sanitary facilities with WC, sinks, urinals)
- Public buildings or places holding events that need additional facilities
- River housing (floating chalets, barges)



Sanicubic – Vortex Black water

- One or more dwellings connected to the same lifting station
- Sanitary facilities in bars, restaurants
- Stadium or public building sanitary facilities
- Hotels, campsites, offices
- Boats



Sanicubic SC/GR Black water

- Public buildings (offices, stations, hospitals)
- Shopping centres
- Apartment buildings



Floor standing lifting stations

Product	Image	Grey water	Black water	HMT max. (m)	Q max. (m^3/h)
Sanicom 1 P.68		•		11	12
Sanicom 2 P.70				15	18
Sanicubic 1 P.72		•	•	13	15
Sanicubic 2 Classic L MODIFICATION P.74		•	•	13	15
Sanicubic 2 Pro / 2 Pro Smart L MODIFICATION P.76				13	15
Sanicubic 1 GR HP L MODIFICATION P.78		•	•	18	19
Sanicubic 2 GR HP L MODIFICATION P.80				18	19
Sanicubic 1 GR P.82		•	•	39	17
Sanicubic 2 GR P.84				39	17
Sanicubic 1 VX L MODIFICATION P.86		•	•	13.5	40
Sanicubic 2 VX L MODIFICATION P.88				16	55
Sanicubic 1 SC P.90	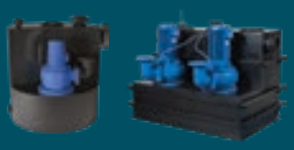	•	•	22	165
Sanicubic 2 SC P.92				22	165

- **HIGH PERFORMANCE OPERATION**
- **EASY ACCESS TO MOTOR(S) AND LEVEL SENSORS FOR MAINTENANCE**
- **CONTROL BOX COMES AS STANDARD (EXCEPT SANICOM 1)**
- **INLETS ON THE TOP OF THE UNIT AND THE SIDES**

EXAMPLE OF INSTALLING A **LIFTING STATION**



GYM

Showers and toilets

DILEMMA

Installing a communal bathroom with toilet, basin and showers in the basement without gravity drainage.

SOLUTION

A Sanicubic 2 VX lifting station was installed in the basement to connect to the main drainage located at street level.

INSTALLING A Sanicubic FLOOR STANDING STATION

KEY POINTS TO REMEMBER:

Mandatory vent pipe, ideally through the building roof

Isolation valve on the discharge pipe, should be as close as possible to the Sanicubic unit

Separate control box should be installed in a safe, visible location

Make sure pipework is securely mounted

Integrated non-return valve with operating lever

Ensure service valves are fitted to all inlet and discharge pipework

Sanicubic should be installed in a frost-free location, in a well lit room and with sufficient space for maintenance of the unit



Sanicom 1

Grey water

The Sanicom 1 is an automatic powerful lifting station designed to remove grey water from public places such as doctors' surgeries, showers in sports halls, launderettes, pubs, hair salons etc. Suitable for multiple connections the unit can handle temperatures up to 90°C for short periods of time. This unit is equipped with a dip tube that controls the activation of the motor. A high-level alarm is built into the unit.



PERFORMANCE

- Max. head: 11 m
- Max. flow rate: 12 m^3/h

PRODUCT BENEFITS

- Grey water lifting station
- The unit is floor standing for easy installation
- Easily accessible for maintenance
- 2 side inlets
- Alarm can be fitted to the unit if required



Closed Impeller

2-year warranty

See page 9

OPTIONAL EXTRAS



Wired, audible and visual alarm box
Product code: 30520
Barcode: 3308815083384



Sanicubic carbon filter
Product code: 1108
Barcode: 3308815077529

PACK CONTAINS

Sanicom 1, non-return valve, connectors

DIMENSIONS

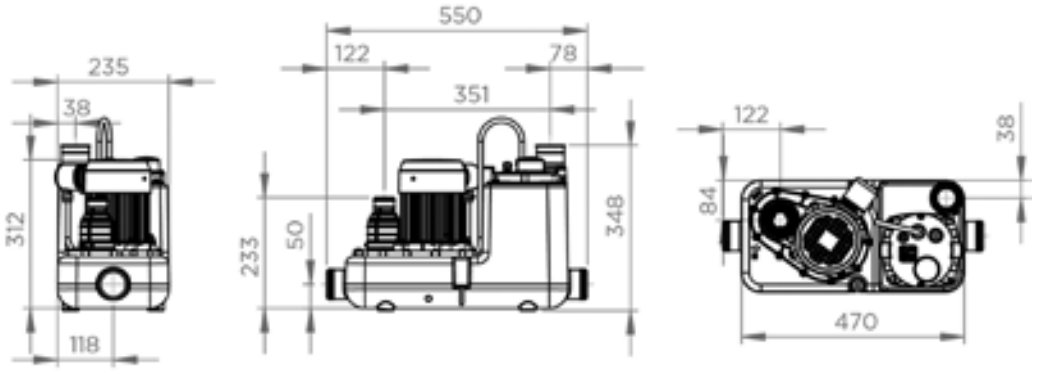

Dimensions (mm)

CURVE

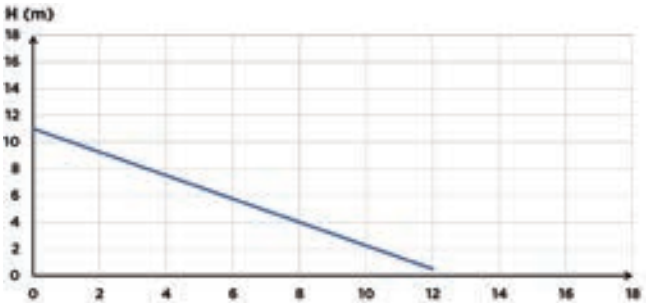

flow rate (m^3/h)

CONNECTIONS



External inlet diameter: 40/50 mm

External discharge diameter: 32 mm

External ventilation diameter: 50 mm

	Sanicom 1
Type of control box	Integrated
Material	
Tank	PE
Pump housing	PA 12 GF
Motor housing	Aluminium
Impeller	PA 6 GF
Electrical features	
Voltage (V)	230
Frequency (Hz)	50-60
Power consumption P1 (W)	750
Power output P2 (W)	525
IP Rating	IPX4
Hydraulics	
Max. head (m)	11
Max. flow rate (m^3/h)	12
External inlet diameter (mm)	40,50
External discharge diameter (mm)	32
External ventilation diameter (mm)	50
Total volume (L)	14
Useable volume (L)	5,7
ON Level /OFF level (mm)	135/50
Alarm level (mm)	205
Particle size (mm)	8
Max. temperature of the pumped liquid (5 min)	90°C
Type of impeller	closed impeller
Type of activation	pneumatic
Identification and logistics	
Gross weight (kg)	10
Barcode	3308815082851
Product code	**30003**

Sanicom 2

Grey water

Sanicom 2 is an automatic grey water lifting station with two powerful motors that can be used in busy commercial applications such as restaurants, pubs, hair salons, cafes etc. The motors work alternatively. Suitable for multiple connections this unit can handle temperatures up to 90°C for short periods of time (max 5 mins). The second pump also assists the first in case of a sudden large intake of water. The tank is equipped with 2 immersion tubes controlling the motor and the alarm system. The station is delivered as standard with a control box integrating an audible and visual alarm, and a remote wired alarm box available as an option.



PERFORMANCE

- Max. head: 15 m
- Max. flow rate: 18 m^3/h

PRODUCT BENEFITS

- Grey water lifting station
- Floor standing for easy installation
- Easily accessible for maintenance
- 2 side inlets with outer diameter 40/50/80
- 2 pumps operate alternately for more even use
- Remote control box comes as standard
- Alarm can be fitted if required



Closed Impeller

2-year warranty

See page 9

DELIVERED AS STANDARD



Classic control box

PACK CONTAINS

Sanicom 2, 2 x non-return valves, connectors, control unit (2 m cable)

OPTIONAL EXTRAS



Wired, audible and visual alarm box
Product code: 30521
Barcode: 3308815084107



Sanicubic carbon filter
Product code: 1108
Barcode: 3308815077529

DIMENSIONS

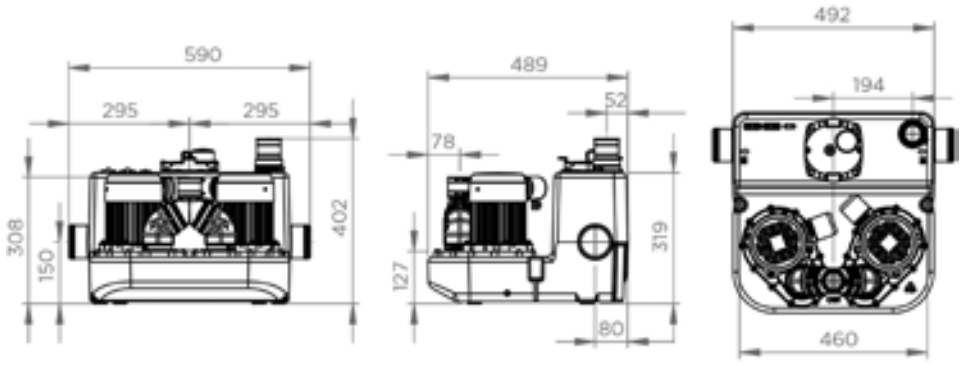

Dimensions (mm)

CURVE

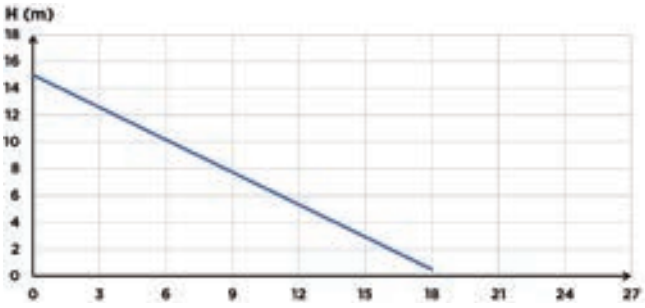

CONNECTIONS



External inlet diameter: 40/50/80 mm

External discharge diameter: 50 mm

External ventilation diameter: 50 mm

	Sanicom 2
Type of control box	Classic
Material	
Tank	PE
Pump housing	PA 12 GF
Motor housing	Aluminium
Impeller	PA 6 GF
Electrical features	
Voltage (V)	230
Frequency (Hz)	50-60
Power consumption P1 (W)	1500
Power output P2 (W)	1050
IP Rating	IPX4
Hydraulics	
Max. head (m)	15
Max. flow rate (m^3/h)	18
External inlet diameter (mm)	40,50,80
External discharge diameter (mm)	50
External ventilation diameter (mm)	50
Total volume (L)	34
Useable volume (L)	13
ON Level /OFF level (mm)	145/60
Alarm level (mm)	215
Particle size (mm)	8
Max. temperature of the pumped liquid (5 min)	90°C
Type of impeller	closed impeller
Type of activation	pneumatic
Identification and logistics	
Gross weight (kg)	28
Barcode	3308815082868
Product code	**30004**

Sanicubic 1

Grey water, black water

The Sanicubic 1 lifting station is designed for use in a single property (house, small commercial premises) and collects all waste water from toilets, bathrooms, kitchens and laundry rooms. The unit uses the Pro X K2 grinding technology and removes waste water through 50 mm diameter discharge pipe.



PERFORMANCE

- Max. head: 13 m
- Max. flow rate: 15 m^3/h

PRODUCT BENEFITS

- Floor standing so easy to install
- Easy access for maintenance
- 4 inlets, 2 of which are side inlets
- Less chance of clogging due to Pro X K2 grinder technology
- Discharge in 50 mm ext. pipe
- Maximum temperature of incoming waste water: 70°C (max 5 mins)



Pro X K2 grinder

2-year warranty

See page 9

DELIVERED AS STANDARD



Wired audible and visual alarm box (5 m)

OPTIONAL EXTRAS



Isolation valve
DN50 shut-off valve
Product code: 1109



Isolation valve
DN100 shut-off valve
Product code: 1107/1



Sanicubic carbon filter
Product code: 1108
Barcode: 3308815077529

DIMENSIONS

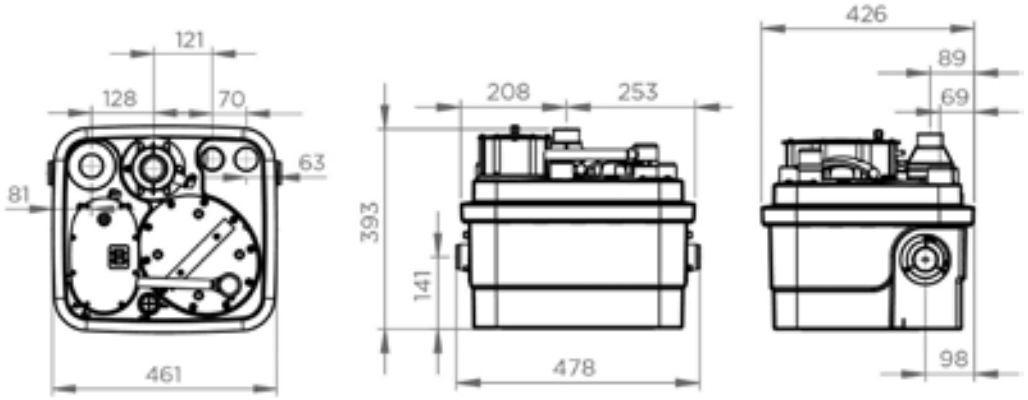

Dimensions (mm)

CURVE

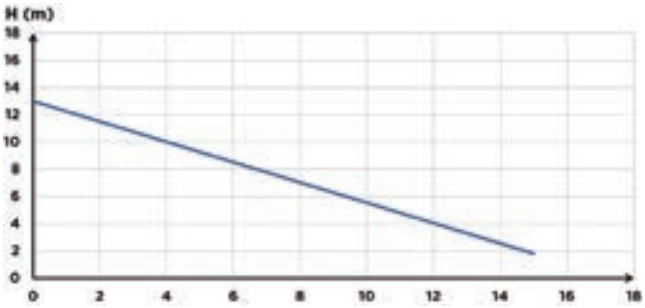

CONNECTIONS



External inlet diameter: 40/50/100/110 mm

External discharge diameter: 50 mm

External ventilation diameter: 50 mm

	Sanicubic 1
Type of activation	Pneumatic
Material	
Tank	PP
Pump housing	PA 12 GF
Motor housing	PA 12 GF
Impeller	PP GF
Electrical features	
Voltage (V)	220-240
Frequency (Hz)	50-60
Power consumption P1 (W)	1500
Power output P2 (W)	1050
Mode of operation	S3 30%
IP rating	IP67
Hydraulics	
Max. Head (m)	13
Max. flow rate (m³/h)	15
External inlet diameter (mm)	40,50,100,110
External discharge diameter (mm)	50
External ventilation diameter (mm)	50
Total volume (L)	32
Useable volume (L)	10
ON Level /OFF level (mm)	140/70
Alarm level (mm)	210
Max. temperature of the pumped liquid (5 min)	70°C
Type of impeller	Pro X K2 grinder
Identification and logistics	
Gross weight (kg)	23
Barcode	3308815074429
Product code	**30006**

Sanicubic 2 Classic L

Grey water, black water

Sanicubic 2 Classic L is a two-pump station designed for the lifting of waste water from individual houses, small businesses or light commercial premises such as restaurants, pubs or offices. It uses Grinder Pro X K2 macerator technology allowing the removal of waste water through 50 mm diameter discharge pipe. The Sanicubic 2 Classic L has two motors that operate alternately. The station is supplied with a classic control box. A wired alarm allowing monitoring of your station from another room is available as an option.



PERFORMANCE

- Max. head: 13 m
- Max. flow rate: 15 m^3/h

PRODUCT BENEFITS

- Easily accessible with removable motors and level sensors for ease of maintenance
- Alternating operation of the 2 pumps
- 5 inlets, 2 of which are side inlets
- Less chance of clogging due to the Grinder Pro X K2 technology
- Discharge in 50 mm ext. pipe



Grinder Pro X K2

2-year warranty

See page 9

DELIVERED AS STANDARD



Classic
control box

OPTIONAL EXTRAS



Isolation valve
DN50 shut-off valve
Product code: 1109



Isolation valve
DN100 shut-off valve
Product code: 1107/1



Sanicubic carbon filter
Product code: 1108
Barcode: 3308815077529



Wired audible and
visual alarm box (5 m)
Product code: 30521
Barcode: 3308815084107

DIMENSIONS

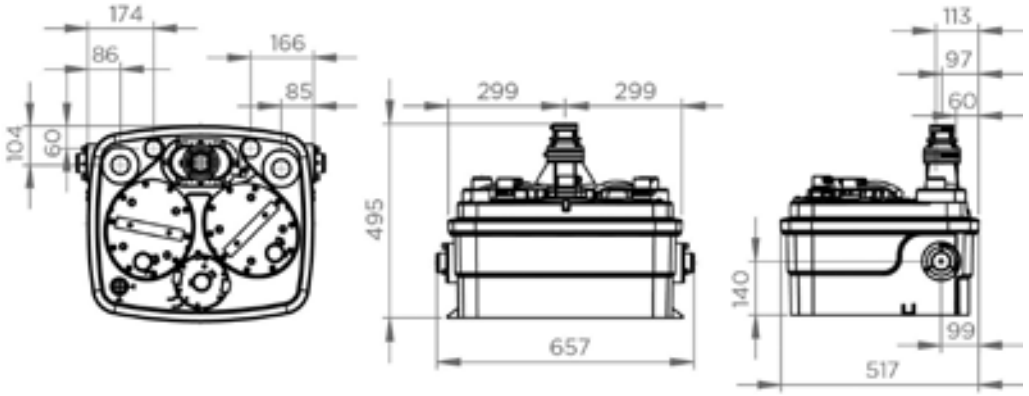

Dimensions (mm)

CURVE

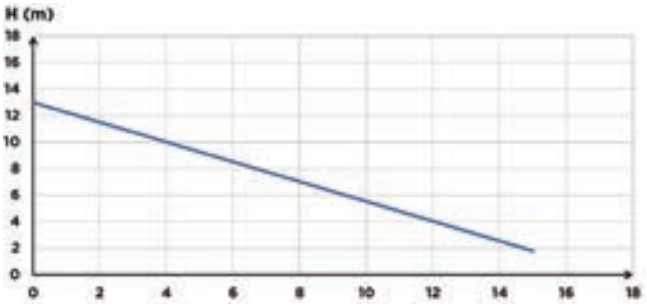

flow rate (m^3/h)

CONNECTIONS



External inlet diameter: 40/50/100/110 mm

External discharge diameter: 50 mm

External ventilation diameter: 50 mm

	Sanicubic 2 Classic L
Type of activation	Pneumatic
Type of control box	Classic
Material	
Tank	PP
Pump housing	PA 12 GF
Motor housing	PA 12 GF
Impeller	PP GF
Electrical features	
Voltage (V)	230
Frequency (Hz)	50-60
Power consumption P1 (W)	1500
Power output P2 (W)	1050
Mode of operation	S3 50%
IP rating	IP68
Hydraulics	
Max. head (m)	13
Max. flow rate (m^3/h)	15
External inlet diameter (mm)	40,50,100,110
External discharge diameter (mm)	50
External ventilation diameter (mm)	50
Total volume (L)	45
Useable volume (L)	17.5
ON Level /OFF level (mm)	140/70
Alarm level (mm)	210
Max. temperature of the pumped liquid (5 min)	70°C
Type of impeller	Pro X K2 grinder
Identification and logistics	
Gross weight (kg)	35
Barcode	3308815102764
Product code	**31031**

Sanicubic 2 Pro

Grey water, black water

Sanicubic 2 Pro, 2 Pro Smart L and Pro Smart brushless L are 2-pump stations designed for the lifting of waste water from individual houses, small businesses or light commercial premises such as restaurants or pubs. They use the Grinder Pro X K2 macerator technology which removes waste water through a 50 mm diameter discharge pipe. The two pumps work alternately. The 5 inlets, 2 of which are side inlets, allow great flexibility in the installation of sanitaryware.





PERFORMANCE

- Max. head: 13 m
- Max. flow rate: 15 m^3/h

PRODUCT BENEFITS

- Easily accessible with removable motors and level sensors for ease of maintenance
- Alternating operation of the 2 pumps
- 5 inlets, 2 of which are side inlets
- Less chance of clogging due to the Grinder Pro X K2 technology
- Discharge in 50 mm ext. pipe
- Smart control box is included with the Sanicubic 2 Pro Smart L and Smart Brushless L



Grinder Pro X K2

BRUSHLESS MOTOR

2-year warranty

See page 9

DELIVERED AS STANDARD



HF alarm for Sanicubic 2 Pro



Classic control box for Sanicubic 2 Pro



SMART control box for Sanicubic 2 Pro Smart and 2 Pro Smart Brushless

OPTIONAL EXTRAS



Isolation valve DN50 shut-off valve
Product code: 1109



Isolation valve DN100 shut-off valve
Product code: 1107/1



Sanicubic carbon filter
Product code: 1108
Barcode: 3308815077529



Wired audible and visual alarm box (5 m)
Product code: 30521
Barcode: 3308815084107

DIMENSIONS

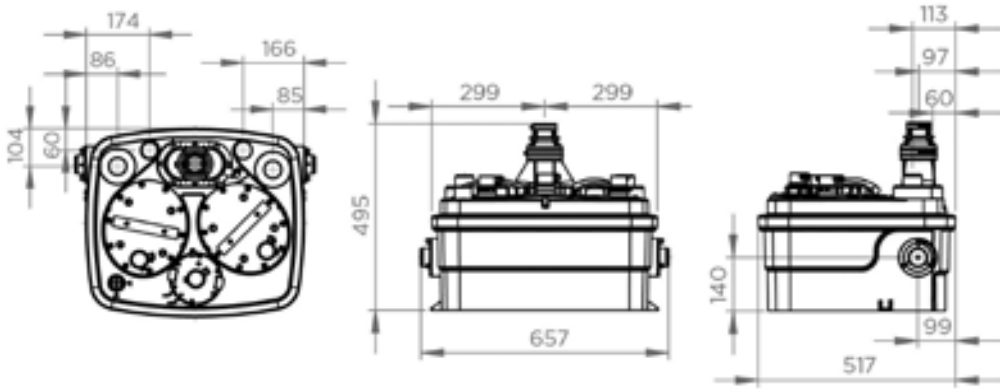

Dimensions (mm)

CURVE

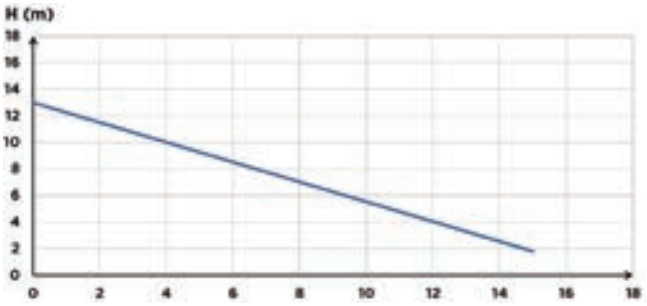

flow rate (m^3/h)

CONNECTIONS



External inlet diameter: 40/50/100/110 mm

External discharge diameter: 50 mm

External ventilation diameter: 50 mm

	Sanicubic 2 Pro	Sanicubic 2 Pro Smart L	Sanicubic 2 Pro Smart Brushless L
Type of control box	Classic	Smart	Smart
Material			
Tank	PP	PP	PP
Pump housing	PA 12 GF	PA 12 GF	PA 12 GF
Motor housing	PA 12 GF	PA 12 GF	PA 12 GF
Impeller	PP GF	PP GF	PP GF
Electrical features			
Voltage (V)	230	230	230
Frequency (Hz)	50-60	50-60	50-60
Power consumption P1 (W)	1500	1500	1500
Power output P2 (W)	1050	1050	1050
Mode of operation	S3 50 %	S3 50 %	S3 50 %
IP rating	IP68	IP68	IP68
Hydraulics			
Max. head (m)	13	13	13
Max. flow rate (m^3/h)	15	15	15
External inlet diameter (mm)	40,50,100,110	40,50,100,110	40,50,100,110
External discharge diameter (mm)	50	50	50
External ventilation diameter (mm)	50	50	50
Total volume (L)	45	45	45
Useable volume (L)	17.5	17.5	17.5
ON Level /OFF level (mm)	140/70	140/70	140/70
Alarm level (mm)	210	210	210
Max. temperature of the pumped liquid (5 min)	70°C	70°C	70°C
Type of impeller	Pro X K2 grinder	Pro X K2 grinder	Pro X K2 grinder
Type of activation	pneumatic	pneumatic	pneumatic
Identification and logistics			
Gross weight (kg)	34	35	35
Barcode	3308815074450	3308815102689	3308815102696
Product code	**30011**	**31032**	**31033**

Sanicubic 1 GR HP L

Grey water, black water

Sanicubic 1 GR HP L is designed for the lifting of black water from individual houses, flats or small commercial businesses. It uses Grinder Pro X K2 macerator technology allowing the removal of waste water through a 50 mm diameter discharge pipe. The two DN 100 mm side inlets provide great flexibility for the installation. The station is supplied as standard with a Classic control box incorporating an audible and visual alarm. A wired alarm allowing monitoring of your station from another room is available as an optional extra.



PERFORMANCE

- Max. head: 18 m
- Max. flow rate: 19 m^3/h

PRODUCT BENEFITS

- Floor standing for easy installation
- Easy access to the pressure switch and motor for maintenance
- Grinder Pro XK2 stainless steel technology
- Can handle water temperatures up to 90°C (max 5 mins)
- Two side inlets DN 100 mm
- Non-return valve included
- Classic control box included



Grinder Pro X K2

2-year warranty

See page 9

DELIVERED AS STANDARD



Classic
control box

OPTIONAL EXTRAS



Isolation valve
DN50 shut-off valve
Product code: 1109



Isolation valve
DN100 shut-off valve
Product code: 1107/1



Sanicubic carbon filter
Product code: 1108
Barcode: 3308815077529



Wired audible and
visual alarm box (5 m)
Product code: 30520
Barcode: 3308815083384

DIMENSIONS

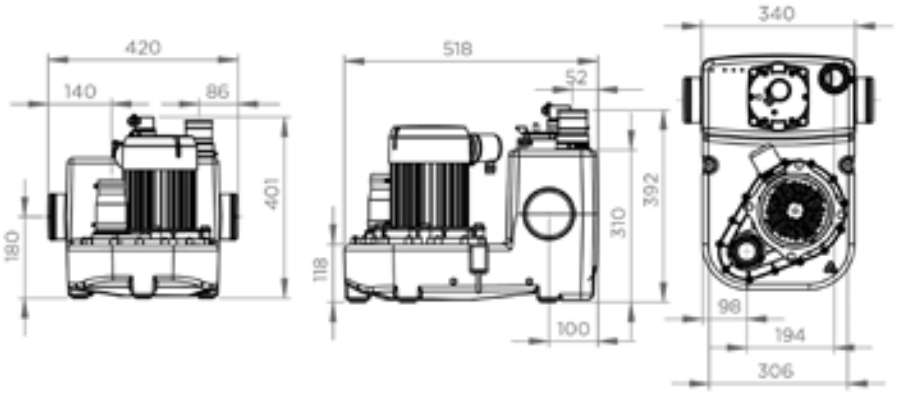

Dimensions (mm)

CURVE

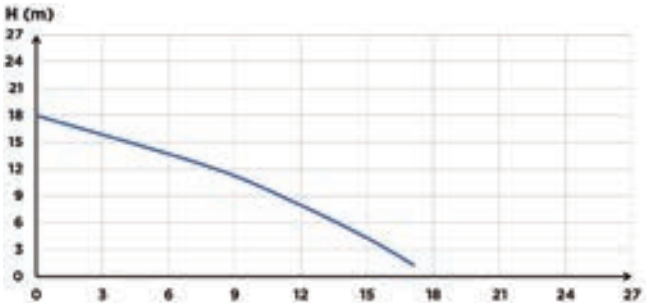

CONNECTIONS



External inlet diameter: 100 mm

External discharge diameter: 50 mm

External ventilation diameter: 50 mm

	Sanicubic 1 GR HP L
Type of activation	Pneumatic
Type of control box	Classic
Material	
Tank	PE HD
Pump housing	PA 12 GF
Motor housing	Aluminium
Impeller	PA 6 GF
Electrical features	
Voltage (V)	220-240
Frequency (Hz)	50-60
Power consumption P1 (W)	2000
Power output P2 (W)	1400
Mode of operation	S3 25%
IP Rating	IPX8
Hydraulics	
Max. head (m)	18
Max. flow rate (m³/h)	19
External inlet diameter (mm)	100
External discharge diameter (mm)	50
External ventilation diameter (mm)	50
Total volume (L)	26
Useable volume (L)	12
ON Level /OFF level (mm)	155/60
Alarm level (mm)	225
Max. temperature of the pumped liquid (5 min)	90°C
Type of impeller	Pro X K2 grinder
Identification and logistics	
Gross weight (kg)	24
Barcode	3308815102702
Product code	**31034**

Sanicubic 2 GR HP L

Grey water, black water

Sanicubic 2 GR HP L is a floor-mounted twin-motor high-performance lifting station, designed for the lifting of waste water from individual houses, flats, small commercial premises, shops or restaurants. It uses Grinder Pro X K2 technology which allows the discharge through 50 mm diameter discharge pipe. The two pumps operate alternately and are activated simultaneously in case of high inflow. The three inlets provide great flexibility in the installation. Sanicubic 2 GR HP L comes as standard with a Classic control box including an audible and visual alarm. A wired alarm for monitoring your station from another room is available as an optional extra.



PERFORMANCE

- Max. head: 18 m
- Max. flow rate: 19 m^3/h

PRODUCT BENEFITS

- Floor standing for ease of installation
- Easy access to the pressure switch and motor for maintenance
- Grinder Pro X K2 stainless steel technology
- Can handle temperatures up to 90°C (max 5 mins)
- Two side inlets DN 100 mm
- Non-return valve included
- Classic control box included
- Two independent motors ensure a failsafe, continuous operation



Grinder Pro X K2

2-year warranty

See page 9

DELIVERED AS STANDARD



Classic
control box

OPTIONAL EXTRAS



Isolation valve
DN50 shut-off valve
Product code: 1109



Isolation valve
DN100 shut-off valve
Product code: 1107/1



Sanicubic carbon filter
Product code: 1108
Barcode: 3308815077529



Remote wired audible
and visual alarm unit (5 m)
Product code: 30521
Barcode: 3308815084107

DIMENSIONS

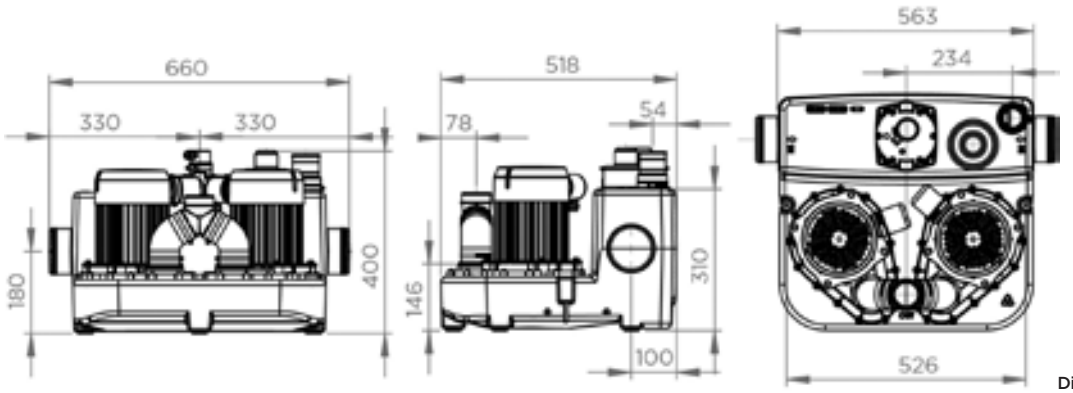

Dimensions (mm)

CURVE

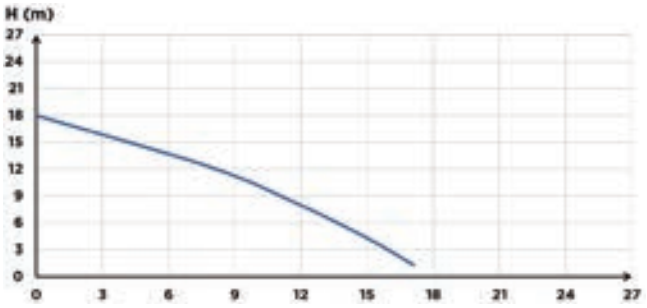

CONNECTIONS



External inlet diameter: 100 mm

External discharge diameter: 50 mm

External ventilation diameter: 50 mm

	Sanicubic 2 GR HP L
Type of activation	Pneumatic
Type of control box	Classic
Material	
Tank	PE HD
Pump housing	PA 12 GF
Motor housing	Aluminium
Impeller	PP GF
Electrical features	
Voltage (V)	220-240
Frequency (Hz)	50-60
Power consumption P1 (W)	2000
Power output P2 (W)	1400
Mode of operation	S3 40%
IP rating	IPX8
Hydraulics	
Max. head (m)	18
Max. flow rate (m³/h)	19
External inlet diameter (mm)	100
External discharge diameter (mm)	50
External ventilation diameter (mm)	50
Total volume (L)	39
Useable volume (L)	15
ON Level /OFF level (mm)	155/60
Alarm level (mm)	225
Max. temperature of the pumped liquid (5 min)	90°C
Type of impeller	Pro X K2 grinder
Identification and logistics	
Gross weight (kg)	39
Barcode	3308815102719
Factory code	**31035**

Sanicubic 1 GR

Grey water, black water

It collects all waste water from toilets, bathrooms, kitchens or laundry rooms. It is equipped with a pump with the Pro X K3 grinder system. It has 7 possible inlets to collect all types of waste water in the most demanding of settings. The station comes with a pneumatic control box including an audible and visual alarm.



PERFORMANCE

- Max. Head: 39 m
- Max. Flow rate: 17 m³/h

DEPENDING ON MODEL

PRODUCT BENEFITS

- Easily accessible for maintenance
- Compact dimensions
- 5 inlets
- Grinder Pro X K3 technology
- 5 pump versions in single or three-phase
- Integrated connection and non-return valve



Grinder Pro X K3

2-year warranty

See page 9

DELIVERED AS STANDARD



Control boxes ZPS – single pump version

OPTIONAL EXTRAS



Isolation valve DN50 shut-off valve
Product code: 1109



Isolation valve DN100 shut-off valve
Product code: 1107/1



Sanicubic carbon filter
Product code: 1108
Barcode: 3308815077529

DIMENSIONS

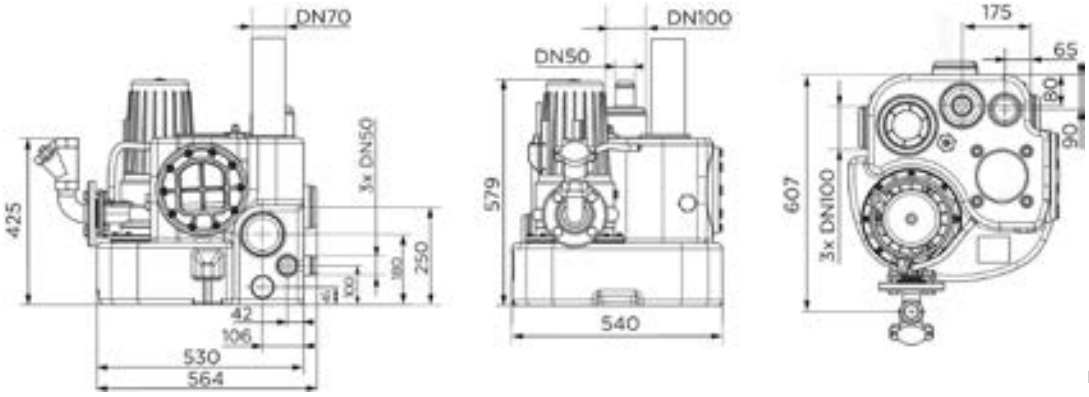

Dimensions (mm)

CURVE

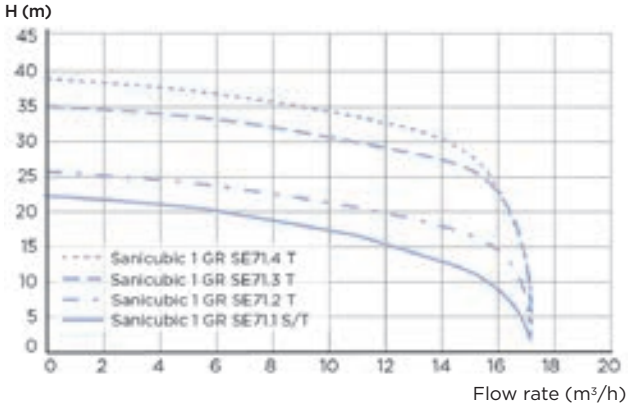

CONNECTIONS



Inlet diameter DN: 50, 100

Discharge diameter DN: 50

External ventilation diameter: 75 mm

	Sanicubic 1 GR SE71.1 S	Sanicubic 1 GR SE71.1 T	Sanicubic 1 GR SE71.2 T	Sanicubic 1 GR SE71.3 T	Sanicubic 1 GR SE71.4 T
Type of activation	Pneumatic	Pneumatic	Pneumatic	Pneumatic	Pneumatic
Type of control box	ZPS 1	ZPS 1	ZPS 1	ZPS 1	ZPS 1
Material					
Tank	LDPE	LDPE	LDPE	LDPE	LDPE
Pump housing	GG-20	GG-20	GG-20	GG-20	GG-20
Motor housing	GG-20	GG-20	GG-20	GG-20	GG-20
Impeller	GG-20	GG-20	GG-20	GG-20	GG-20
Electrical features					
Voltage (V)	230	400	400	400	400
Frequency (Hz)	50-60	50-60	50-60	50-60	50-60
Power consumption P1 (W)	2200	2100	2100	3900	3900
Power output P2 (W)	1700	1700	1700	3200	3200
Mode of operation	S3 25%	S3 25%	S3 25%	S3 25%	S3 25%
IP rating	IP68	IP68	IP68	IP68	IP68
Hydraulics					
Max. Head (m)	22	22	25	35	39
Max. Flow rate (m³/h)	17	17	17	17	17
Inlet diameter DN	50, 100	50, 100	50, 100	50, 100	50, 100
Discharge diameter DN	50	50	50	50	50
External ventilation diameter (mm)	75	75	75	75	75
Total volume (L)	55	55	55	55	55
ON level /OFF level (mm)	140-250/30	140-250/30	140-250/30	140-250/30	140-250/30
Alarm level (mm)	180-290	180-290	180-290	180-290	180-290
Max. Temperature of the pumped liquid (5 min max)	55°C	55°C	55°C	55°C	55°C
Type of impeller	Pro X K3 grinder	Pro X K3 grinder	Pro X K3 grinder	Pro X K3 grinder	Pro X K3 grinder
Identification and logistics					
Gross weight (kg)	64	64	64	68	68
Barcode	3308815079110	3308815079127	3308815079134	3308815079141	3308815079158
Product code	**21518**	**21519**	**21333**	**21520**	**21521**

S = Single phase, T = Three phase.

Sanicubic 2 GR

Grey water, black water

The Sanicubic 2 GR station is designed for the lifting of waste water from larger single dwellings, apartment blocks, and commercial buildings such as train stations, cinemas, restaurants etc. This station is equipped with two pumps with Grinder Pro X K3 technology, which are activated simultaneously in case of a large water surge. Sanicubic 2 GR is available in 4 versions with different lifting performances. It has 5 inlets of different diameters. The station comes with a pneumatic control box including an audible and visual alarm.



PERFORMANCE

- Max. Head: 39 m
- Max. Flow rate: 17 m³/h

DEPENDING ON MODEL

PRODUCT BENEFITS

- Floor standing installation
- Easily accessible for maintenance
- Grinder Pro X K3 technology
- 1 DN 100/150 inlet, 1 DN 100 inlet, 1 DN 50 inlet
- 150-litre tank
- 4 three-phase versions
- Non-return valve and outlet flange included



Grinder Pro X K3

2-year warranty

See page 9

DELIVERED AS STANDARD



Control boxes ZPS 2 – two pump version

OPTIONAL EXTRAS



Isolation valve
DN50 shut-off valve
Product code: 1109



Isolation valve
DN100 shut-off valve
Product code: 1107/1



Sanicubic carbon filter
Product code: 1108
Barcode: 3308815077529

DIMENSIONS

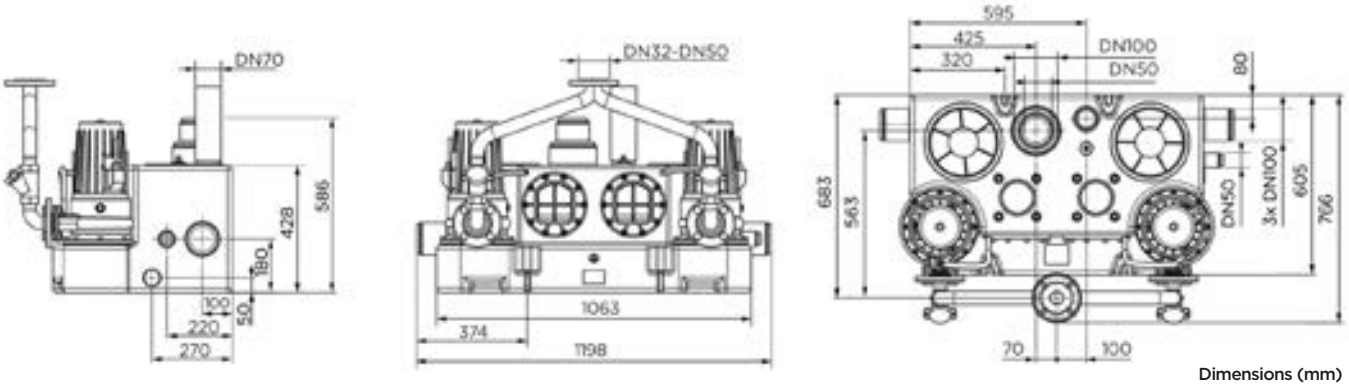

Dimensions (mm)

CURVE

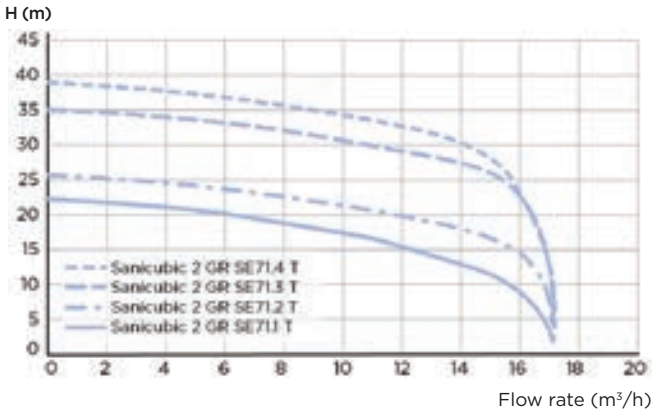

CONNECTIONS

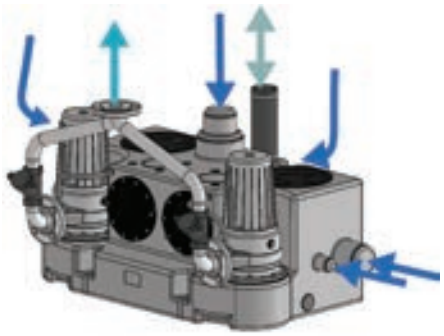

Inlet diameter DN: 50, 100, 150

Discharge diameter DN: 50

External ventilation diameter: 75 mm

	Sanicubic 2 GR SE71.1 T	Sanicubic 2 GR SE71.2 T	Sanicubic 2 GR SE71.3 T	Sanicubic 2 GR SE71.4 T
Type of activation	Pneumatic	Pneumatic	Pneumatic	Pneumatic
Type of control box	ZPS 2	ZPS 2	ZPS 2	ZPS 2
Material				
Tank	LDPE	LDPE	LDPE	LDPE
Pump housing	GG-20	GG-20	GG-20	GG-20
Motor housing	GG-20	GG-20	GG-20	GG-20
Impeller	GG-20	GG-20	GG-20	GG-20
Electrical features				
Voltage (V)	400	400	400	400
Frequency (Hz)	50-60	50-60	50-60	50-60
Power consumption P1 (W)	2100	2100	3900	3900
Power output P2 (W)	1700	1700	3200	3200
Mode of operation	S3 25%	S3 25%	S3 25%	S3 25%
IP rating	IP68	IP68	IP68	IP68
Hydraulics				
Max. Head (m)	22	25	35	39
Max. Flow rate (m³/h)	17	17	17	17
Inlet diameter DN	50, 100, 150	50, 100, 150	50, 100, 150	50, 100, 150
Discharge diameter DN	50	50	50	50
External ventilation diameter (mm)	75	75	75	75
Total volume (L)	150	150	150	150
ON level /OFF level (mm)	140-250/30	140-250/30	140-250/30	140-250/30
Alarm level (mm)	180-290	180-290	180-290	180-290
Max. Temperature of the pumped liquid (5 min max)	55°C	55°C	55°C	55°C
Type of impeller	Pro X K3 grinder	Pro X K3 grinder	Pro X K3 grinder	Pro X K3 grinder
Identification and logistics				
Gross weight (kg)	137	137	144	144
Barcode	3308815079165	3308815079172	3308815079189	3308815079196
Product code	**21522**	**21523**	**21524**	**21334**

Sanicubic 1 VX L

Grey water, black water

Sanicubic 1 VX L is a lifting station with 1 vortex pump. It is suitable for lifting waste water from houses or small commercial premises. Sanicubic 1 VX L provides direct and safe access to the motor and level sensors. The lifting station is delivered as standard with a control box. A wired alarm allowing the monitoring of your station from another room is available as an optional extra.



PERFORMANCE

- Max. Head: 13.5 m
- Max. flow rate: 40 m^3/h

PRODUCT BENEFITS

- Floor standing for easy installation
- Easy access for maintenance
- Three inlets
- Vortex technology
- Direct and safe access to the motor
- Comes with classic control box
- Optional wired alarm available



Vortex impeller KX V6

2-year warranty

See page 9

DELIVERED AS STANDARD



Classic
control box

OPTIONAL EXTRAS



Isolation valve
DN50 shut-off valve
Product code: 1109



Isolation valve
DN100 shut-off valve
Product code: 1107/1



Sanicubic carbon filter
Product code: 1108
Barcode: 3308815077529



Remote wired audible
and visual alarm unit (5 m)
Product code: 30520
Barcode: 3308815083384

DIMENSIONS

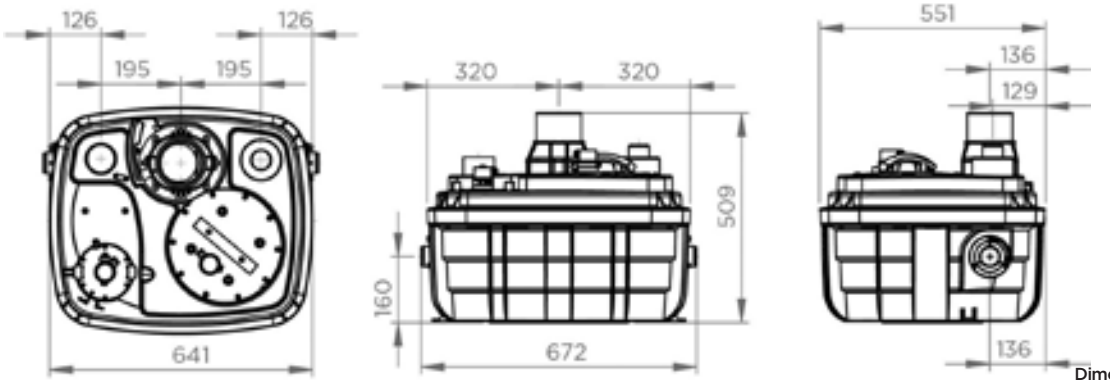

Dimensions (mm)

CURVE

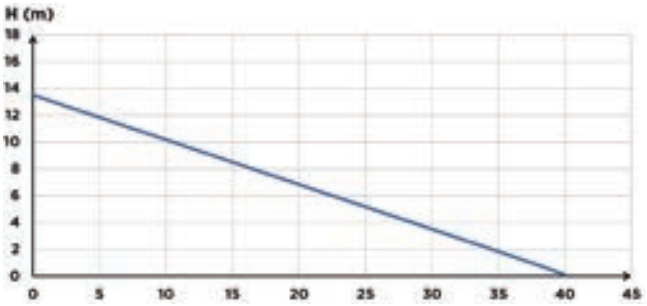

flow rate (m^3/h)

CONNECTIONS

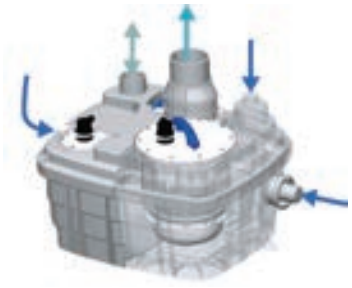

External inlet diameter: 40/50/100/110/125 mm

External discharge diameter: 90/110 mm

External ventilation diameter: 75 mm

	Sanicubic 1 VX L
Type of activation	Pneumatic
Type of control box	Classic
Material	
Tank	PP GF
Pump housing	PA 12 GF
Motor housing	PA 12 GF
Impeller	PPO GF
Electrical features	
Voltage (V)	220-240
Frequency (Hz)	50-60
Power consumption P1 (W)	2000
Power output P2 (W)	1400
Mode of operation	S3 15%
IP rating	IP68
Hydraulics	
Max. Head (m)	13.5
Max. flow rate (m^3/h)	40
External inlet diameter (mm)	40,50,100,110,125
External discharge diameter (mm)	90/110
External ventilation diameter (mm)	75
Total volume (L)	60
Useable volume (L)	21
ON Level /OFF level (mm)	165/95
Alarm level (mm)	235
Particle size (mm)	50
Max. temperature of the pumped liquid (5 min)	70°C
Type of impeller	vortex
Identification and logistics	
Gross weight (kg)	35
Barcode	3308815102726
Product code	**31036**

Sanicubic 2 VX L

Grey water, black water

The Sanicubic 2 VX L lifting station is designed for lifting waste water from shops, private homes or public buildings. It is equipped with two vortex pumps allowing a 50 mm free passage. The five inlets on the unit allow the connection of several items of sanitaryware or kitchen appliances. Sanicubic 2 VX L is available in four versions, single-phase or three-phase. The station is supplied with a Classic control box for the standard versions or a Smart control box with the Smart versions. A wired alarm allowing your station to be monitored from another room is available as an optional extra.



PERFORMANCE

- Max. Head: 16 m
- Max. Flow rate: 55 m³/h

DEPENDING ON MODEL

PRODUCT BENEFITS

- Floor standing for easy installation
- Easily accessible for maintenance
- 5 inlets, 2 of which are side inlets
- 2 vortex motors
- Single phase or three phase
- Alternating motor operation



Vortex impeller KX V6

2-year warranty

See page 9

DELIVERED AS STANDARD



Classic control box



SMART control box

OPTIONAL EXTRAS



Isolation valve DN50 shut-off valve
Product code: 1109



Isolation valve DN100 shut-off valve
Product code: 1107/1



Sanicubic carbon filter
Product code: 1108
Barcode: 3308815077529



Wired audible and visual alarm box (5 m)
Product code: 30521
Barcode: 3308815084107

DIMENSIONS

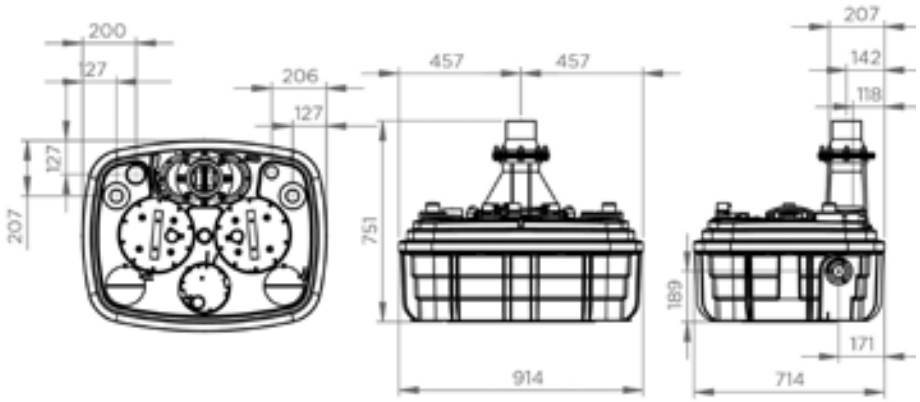

Dimensions (mm)

CURVE

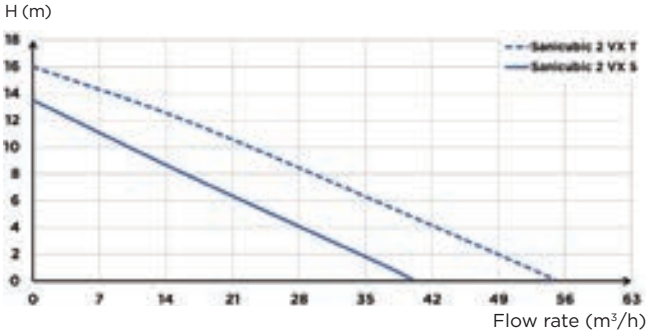

CONNECTIONS



External inlet diameter: 40/50/100/110/125 mm

Discharge diameter ext.: 90/110 mm

External ventilation diameter: 75 mm

	Sanicubic 2 VX S L	Sanicubic 2 VX S Smart L	Sanicubic 2 VX T Smart L
Type of activation	Pneumatic	Pneumatic	Pneumatic
Type of control box	Classic	Smart	Smart
Material			
Tank	PP GF	PP GF	PP GF
Pump housing	PA 12 GF	PA 12 GF	PA 12 GF
Motor housing	PA 12 GF	PA 12 GF	PA 12 GF
Impeller	PPO GF	PPO GF	PPA GF
Electrical features			
Voltage (V)	230	230	400
Frequency (Hz)	50-60	50-60	50-60
Power consumption P1 (W)	2000	2000	3500
Power output P2 (W)	1400	1400	2800
Mode of operation	S3 30%	S3 30%	S3 15%
IP rating	IP68	IP68	IP68
Hydraulics			
Max. Head (m)	13	13	16
Max. Flow rate (m³/h)	40	40	55
External inlet diameter (mm)	40/50/100/110/125	40/50/100/110/125	40/50/100/110/125
External discharge diameter (mm)	90/110	90/110	90/110
External ventilation diameter (mm)	75	75	75
Total volume (L)	120	120	120
Useable volume (L)	26	26	26
ON level /OFF level (mm)	165/95	165/95	165/95
Alarm level (mm)	235	235	235
Particle size (mm)	50	50	50
Max. Temperature of the pumped liquid (5 min max)	70°C	70°C	70°C
Type of impeller	vortex	vortex	vortex
Identification and logistics			
Gross weight (kg)	101	101	102
Barcode	3308815102733	3308815102740	3308815102757
Product code	**31037**	**31038**	**31039**

Sanicubic 1 SC

Grey water, black water

The Sanicubic 1 SC is a lifting station with 1 three-phase cast iron pump with a single-channel impeller. Designed for lifting waste water from public buildings or shopping centres, this station is available in 4 pump versions. It comes with a pneumatic remote control box including an audible and visual alarm.





PERFORMANCE

- Max. Head: 22 m
- Max. Flow rate: 165 m³/h

DEPENDING ON MODEL

PRODUCT BENEFITS

- Floor standing for easy installation
- Easily accessible for maintenance
- One inlet DN150
- Three-phase cast iron pump
- Free passage 80 mm or 100 mm
- Control panel included (ZPS or PS2)
- Star-delta start for Sanicubic 1 SC7.5T
- Customisation possible (tank volume and inlets) for bespoke installation



Single channel impeller

2-year warranty

See page 9

DELIVERED AS STANDARD



Control boxes ZPS – single pump version



PS2 control box

OPTIONAL EXTRAS



Sanicubic XL carbon filter
Product code: 1108/1
Barcode: 3308815076874

DIMENSIONS

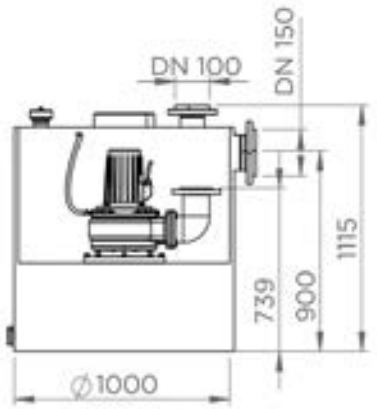

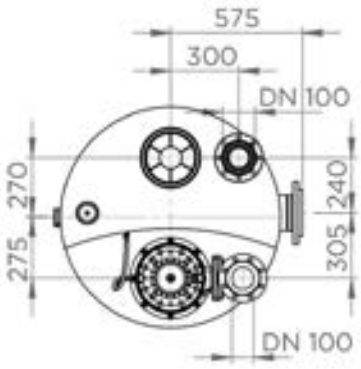

Dimensions (mm)

CURVE

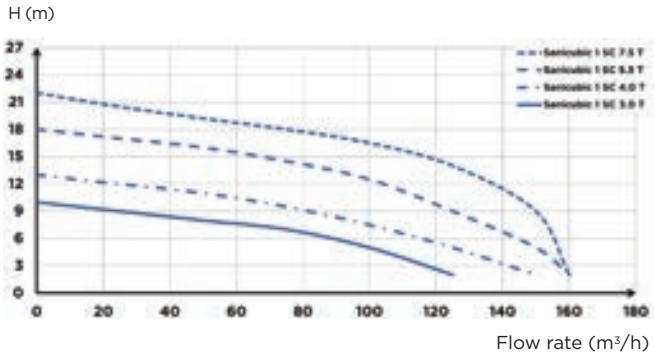

CONNECTIONS

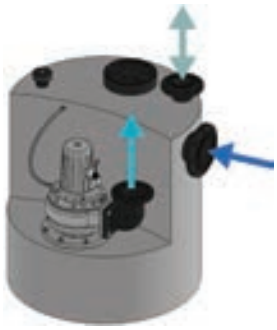

Inlet diameter DN: 150

Discharge diameter DN: 100

Ventilation diameter DN: 100

	Sanicubic 1 SC3.0 T	Sanicubic 1 SC4.0 T	Sanicubic 1 SC5.5 T	Sanicubic 1 SC7.5 T
Type of activation	Pneumatic	Pneumatic	Pneumatic	Pneumatic
Type of control box	ZPS 1	ZPS 1	ZPS 1	PS 2
Material				
Tank	PE HD	PE HD	PE HD	PE HD
Pump housing	EN-GJL-200	EN-GJL-200	EN-GJL-200	EN-GJL-200
Motor housing	EN-GJL-200	EN-GJL-200	EN-GJL-200	EN-GJL-200
Impeller	EN-GJL-200	EN-GJL-200	EN-GJL-200	EN-GJL-200
Electrical features				
Voltage (V)	400	400	400	400
Frequency (Hz)	50-60	50-60	50-60	50-60
Power consumption P1 (W)	4000	5500	6300	8700
Power output P2 (W)	3000	4000	5500	7500
Mode of operation	S3 25%	S3 25%	S3 25%	S3 25%
IP rating	IP56	IP56	IP56	IP56
Hydraulics				
Max. Head (m)	10	13	18	22
Max. Flow rate (m³/h)	120	140	160	165
Inlet diameter DN	150	150	150	150
Discharge diameter DN	100	100	100	100
Ventilation diameter DN	100	100	100	100
Total volume (L)	480	480	480	480
Useable volume (L)	270	270	270	270
Free passage (mm)	80	80	100	100
Max. Temperature of the pumped liquid (5 min max)	55°C	55°C	55°C	55°C
Type of impeller	Single-channel	Single-channel	Single-channel	Single-channel
Identification and logistics				
Gross weight (kg)	210	220	225	240
Barcode	3308815079035	3308815079042	3308815079059	3308815079066
Product code	**21512**	**21328**	**21513**	**21514**

Sanicubic 2 SC

Grey water, black water

The Sanicubic 2 SC is a floor standing lifting station with two single-channel impeller pumps. Sanicubic 2 SC is available in four versions. It has a DN 150 inlet for lifting large volumes of waste water from public buildings or blocks of flats. It is delivered with a pneumatically controlled remote control box (ZPS) including an audible and visual alarm. The Sanicubic 2 SC7.5T version is supplied with a PS2 control box integrated in an electrical cabinet.

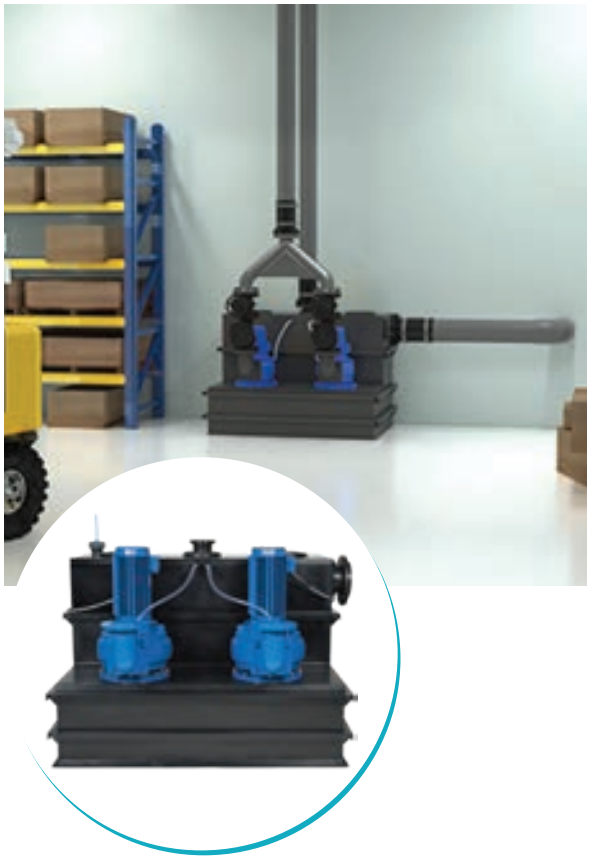

PERFORMANCE

- Max. Head: 22 m
- Max. Flow rate: 165 m^3/h

DEPENDING ON MODEL

PRODUCT BENEFITS

- Two three-phase pumps
- One inlet DN150
- Four versions available
- 1000 litre tank
- Free passage 80 mm or 100 mm
- Control panel included (ZPS or PS2)
- Star-delta start for the Sanicubic 2 SC7. 5T
- Tank customisation on request (tank volume up to 20,000 L and number of inlets)
- Optional mounting accessories available – see accessories page



Single channel impeller

2-year warranty

See page 9

DELIVERED AS STANDARD



Control boxes ZPS 2 – two pump version



PS2 control box

OPTIONAL EXTRAS



Sanicubic XL carbon filter
Product code: 1108/1
Barcode: 3308815076874

DIMENSIONS

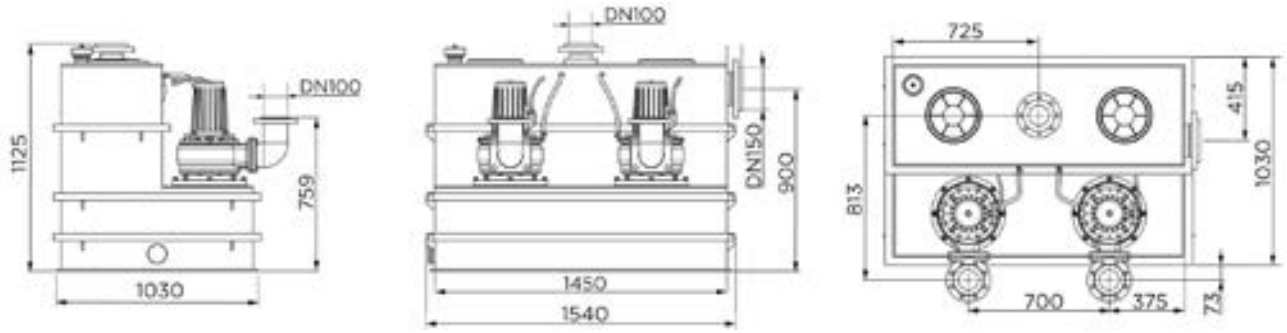

Dimensions (mm)

CURVE

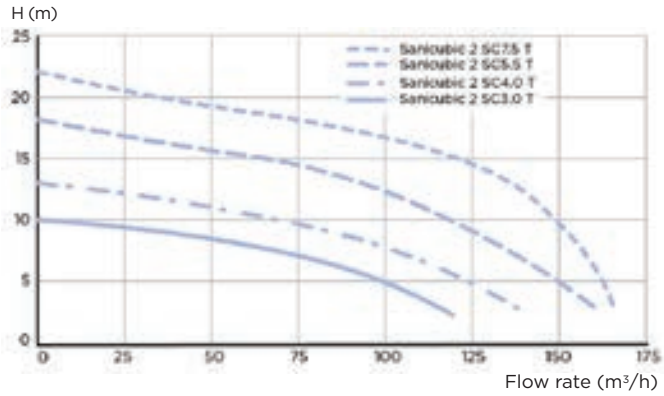

CONNECTIONS

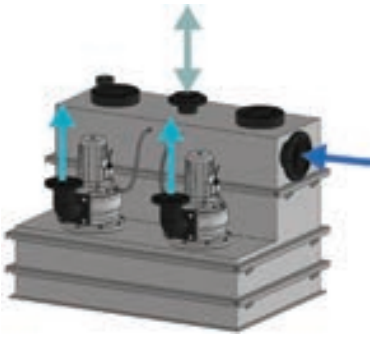

Inlet diameter DN: 150

Discharge diameter DN: 100

Ventilation diameter DN: 100

	Sanicubic 2 SC3.0 T	Sanicubic 2 SC4.0 T	Sanicubic 2 SC5.5 T	Sanicubic 2 SC7.5 T
Type of activation	Pneumatic	Pneumatic	Pneumatic	Pneumatic
Type of control box	ZPS 2	ZPS 2	ZPS 2	PS 2
Material				
Tank	PE HD	PE HD	PE HD	PE HD
Pump housing	EN-GJL-200	EN-GJL-200	EN-GJL-200	EN-GJL-200
Motor housing	EN-GJL-200	EN-GJL-200	EN-GJL-200	EN-GJL-200
Impeller	EN-GJL-200	EN-GJL-200	EN-GJL-200	EN-GJL-200
Electrical features				
Voltage (V)	400	400	400	400
Frequency (Hz)	50-60	50-60	50-60	50-60
Power consumption P1 (W)	4000	5500	6300	8700
Power output P2 (W)	3000	4000	5500	7500
Mode of operation	S3 25%	S3 25%	S3 25%	S3 25%
IP rating	IP56	IP56	IP56	IP56
Hydraulics				
Max. Head (m)	10	13	18	22
Max. Flow rate (m³/h)	120	140	160	165
Inlet diameter DN	150	150	150	150
Discharge diameter DN	100	100	100	100
Ventilation diameter DN	100	100	100	100
Total volume (L)	1000	1000	1000	1000
Useable volume (L)	500	500	500	500
Particle size (mm)	80	80	100	100
Max. Temperature of the pumped liquid (5 min max)	55°C	55°C	55°C	55°C
Type of impeller	Single-channel	Single-channel	Single-channel	Single-channel
Identification and logistics				
Gross weight (kg)	370	385	400	425
Barcode	3308815079073	3308815079080	3308815079097	3308815079103
Product code	**21515**	**21516**	**21517**	**21329**

Saniflo Underground Lifting Stations

In addition to its Sanicubic floor standing lifting stations, Saniflo also offers a wide range of Sanifos underground pumping stations:

- One pump and two pump versions
- Single-phase and three-phase versions
- Grinder, vortex, and two-channel versions

These stations are suitable for various applications, including individual houses, extensions, commercial premises, or even apartment blocks and public buildings.

Advantages of Sanifos underground lifting stations:



Reliability

- High-density rotomolded polyethylene tank with high mechanical resistance, odour-resistant, resistant to chemical attack and UV
- Thermal protection for the motor

Flexibility

- Multiple different diameter inlets available
- Ventilation ports

Ease of installation and maintenance

- Lifting Station delivered ready to install (pre-assembled hydraulic fittings with shut-off valves and non-return valve)
- Cable gland for cable routing
- Stainless steel chain supplied as standard for pump removal
- Control box included with two pump Sanifos units
- Waterproof terminal blocks supplied as standard (for Sanifos 610 and 1300 models)



Underground Lifting Stations

Product	Associated pump(s)	Image	Grey water	Black water	Rainwater	Water after treatment	Head (m)	Flow rate (m^3/h)
Sanifos 110 Tank volume 110 L	P.98 Sanisub ZPK 40 AV		●		●		10	14
	P.100 Sanipump GR		●	●			14	15
Sanifos 280 Tank volume 280 L	P.102 Sanisub ZPK 40 A		●		●		10	13
	P.102 Sanisub Steel				●	●	7	9
	P.104 Sanipump GR		●	●			14	15
	P.104 Sanipump VX		●	●			13	26
Sanifos 610 Tank volume 610 L	P.106 Sanipump SLD		●	●	●		14	35
	P.108 Sanipump GR		●	●			14	15
	P.108 Sanipump VX		●	●			17	29
Sanifos 1300 Tank volume 1300 L	P.110 Sanipump GR		●	●			14	16
	P.110 Sanipump VX		●	●			17	32
Sanifos 1600 **Sanifos 2100** **Sanifos 3100**	P.112 Sanipump ZPG 71		●		●		P.116 Made to measure options	
	P.112 Sanipump ZFS 71		●	●				
	P.112 Sanipump VX 50		●	●	●			

- **DOMESTIC OR COMMERCIAL USAGE**
- **CHOICE OF POWERFUL AUTOMATIC PUMPS OFFERING PEACE OF MIND**
- **BELOW GROUND LEVEL INSTALLATIONS MEANS OUT OF SIGHT ONCE INSTALLED**

Example of installing an underground station





40 APARTMENT BUILDING

Bathrooms and kitchens

CHALLENGE

To lift the waste water from the bathrooms on the first and second basement levels, as well as the bathrooms and kitchen area on the ground floor, which are located below the sewer level.

SOLUTION

A Sanifos 2100 lifting station with its two grinder pumps ZFS 71 has been installed to connect to the main drainage located at street level.

INSTALLATION TIPS
for your Sanifos
underground lifting station

All our devices meet EN 12050-1 standard and must be installed according to EN 12056-4 and EN 752 standards.

SOIL TYPES

- **Nature of soil:** the characteristics of soil (its chemical composition, its pH, its permeability, etc.) will determine the most suitable type of station.
- **Frost-free zone:** in the event of frost, there is a risk of damage to both the pipework and the pump. It is important to take this into account when choosing your station. When the lifting station is installed in an environment where temperatures are below zero, it must be insulated in accordance with local recommendations.

The extensions for Sanifos allows the Sanifos to be buried deeper.

SANIFOS LIFTING STATIONS CAN ALSO BE INSTALLED INSIDE A BUILDING, PLACED ON THE GROUND.

LOCATION

- **Pipe gradient:** for optimal drainage, it is necessary to include a slope of 2 to 4% in the pipework to the unit but there are no restrictions in the distance between the home and the Sanifos unit.

Thanks to pipe inlets from 182 mm to 2940 mm (with extension), Sanifos lifting stations can be installed at various distances from the property with the required gradient.

- **Passage:** remember to take into account the layout of your land such as vehicle access, parking etc.

Our Sanifos lids are available in class A15, B125, D400 complying with standard NF EN 124

VENTILATION

It is essential to install ventilation in the upper part of the station to:

- evacuate the gases that form inside the tank and prevent any risk of explosion
- avoid depressurising the station

To do this, all our Sanifos lifting stations have 2 ventilation openings.

RADAR TECHNOLOGY

- Radar Detection System
- Highly accurate measurement level (2 mm)
- Ease of installation and maintenance
- No direct contact with water

For any specific technical information, refer to the installation instructions, or seek advice from our technical team: **technical@sfasaniflo.co.uk**

Sanifos 110

Grey water

The Sanifos 110 is a grey water compact lifting station designed to lift grey water from an individual house or extension: sink, washing machine etc. It can be used for garden rooms or offices that needs grey water removing. The pump uses the closed impeller technology. It is operated by a float switch for autonomous operation and can handle water up to 90°C. Sanifos 110 comes with pre-mounted pipework and a cable gland for the motor cable outlet and the bottom of the tank is self-cleaning. Its 4 inlets of different diameters allow for flexible installation.



PERFORMANCE

- Max. Head: 10 m
- Max. Flow rate: 14 m³/h

PRODUCT BENEFITS

- Complete solution
- Easy installation: pre-assembled elements
- Closed impeller
- 4 inlets
- Easy access to the pump with screw-on pedestrian cover
- Automatic pump operation
- Optional complete discharge kit available

DELIVERED AS STANDARD



- Tank with pre-assembled hydraulic and sealing gasket, Sanisub ZPK 40 AV pump, PVC pipe, pedestrian cover



Sanisub ZPK 40 AV



Closed impeller

OPTIONAL EXTRAS



Isolation valve
DN50 shut-off valve
Product code: 1109



Isolation valve
DN100 shut-off valve
Product code: 1107/1



Sanifos 110 evacuation kit
Barcode: 3308815077024
Product code: 40500

DIMENSIONS

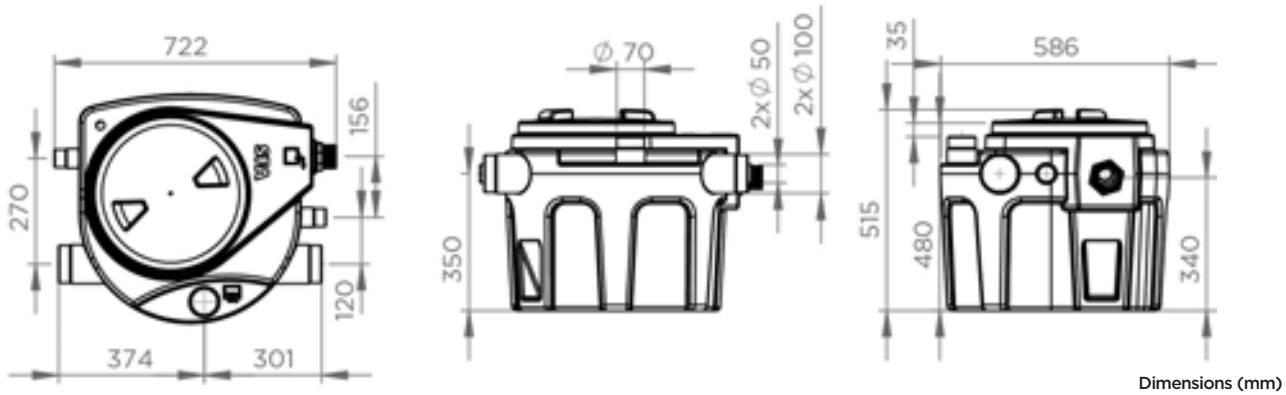

Dimensions (mm)

CURVE

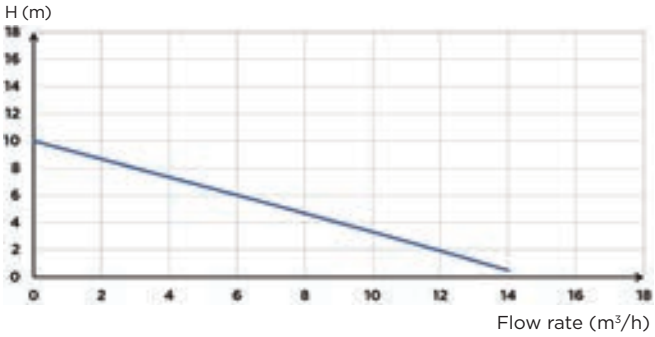

CONNECTIONS



External inlet diameter: 40, 50, 100, 110, 125 mm

External discharge diameter: 50 mm

External ventilation diameter: 75 mm

	Sanifos 110 ZPK 40 AV
Type of activation	Float
Number of pumps	1
Material	
Tank	HDPE
Pipework	PVC
Electrical features	
See electrical features for pump on page 127	
Hydraulics	
Max. Head (m)	10
Max. Flow rate (m³/h)	14
External inlet diameter (mm)	40, 50, 100, 110, 125
External discharge diameter (mm)	50
External ventilation diameter (mm)	75
Total volume (L)	110
Useable volume (L)	38
ON level /OFF level (mm)	240/100
Free passage (mm)	30
Max. temperature of the pumped liquid (5 min)	90°C
Min. incoming water connection (mm)	182
Type of impeller	Closed impeller
Identification and logistics	
Gross weight (kg)	25
Barcode	3308815085951
Product code	**31001**

Sanifos 110

Grey water, black water

The Sanifos 110 is a compact lifting station designed to lift waste water from an individual house: WC, sink, washing machine etc. This makes it an ideal unit for a garden room or home office which has a WC. Equipped with a grinder pump, it is operated by a float switch for automatic operation. Sanifos 110 comes with pre-mounted pipework and a cable gland for the motor cable outlet and the bottom of the tank is self-cleaning. Its 4 inlets of different diameters allow for flexible installation.





PERFORMANCE

- Max. Head: 14 m
- Max. Flow rate: 15 m³/h

PRODUCT BENEFITS

- Complete solution
- Easy installation: pre-assembled elements
- Grinder Pro X K2 technology
- 4 inlets
- Easy access to the pump with screw-on pedestrian cover
- Automatic pump operation
- Optional complete discharge kit available

DELIVERED AS STANDARD



- Tank with pre-assembled hydraulic and sealing gasket, 1 Sanipump GR, PVC pipe, pedestrian cover



Sanipump GR S



Pro X K2 grinder

OPTIONAL EXTRAS



Isolation valve
DN50 shut-off valve
Product code: 1109



Isolation valve
DN100 shut-off valve
Product code: 1107/1



Sanifos 110 evacuation kit
Barcode: 3308815077024
Product code: 40500

DIMENSIONS

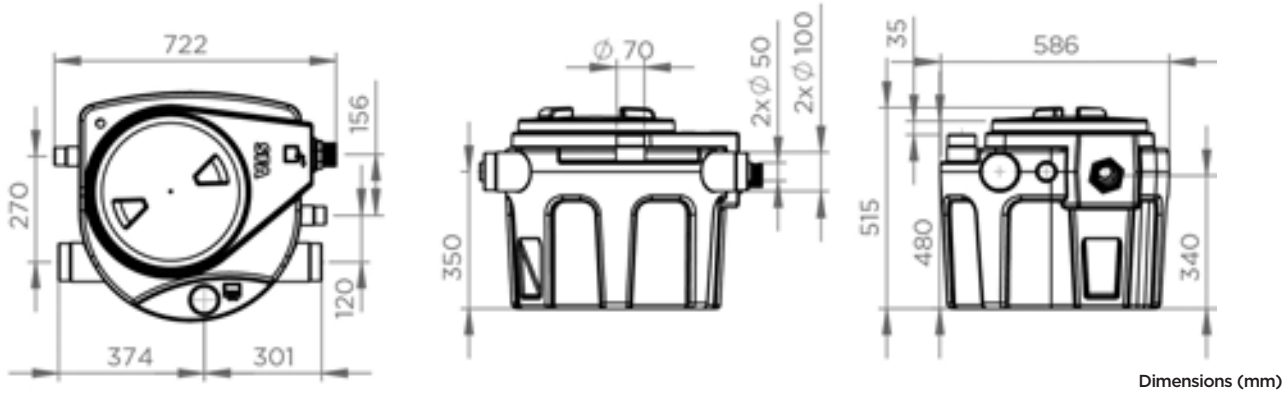

Dimensions (mm)

CURVE

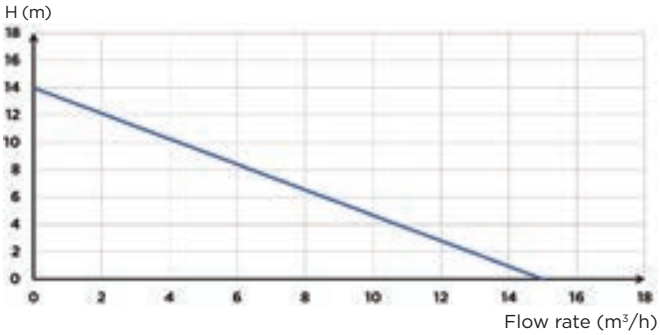

CONNECTIONS



External inlet diameter: 40, 50, 100, 110, 125 mm

External discharge diameter: 50 mm

External ventilation diameter: 75 mm

	Sanifos 110
Type of activation	Float
Number of pumps	1
Material	
Tank	HDPE
Pipework	PVC
Electrical features	
See electrical features for pump on page 135	
Hydraulics	
Max. Head (m)	14
Max. Flow rate (m³/h)	15
External inlet diameter (mm)	40, 50, 100, 110, 125
External discharge diameter (mm)	50
External ventilation diameter (mm)	75
Total volume (L)	110
Useable volume (L)	38
ON level /OFF level (mm)	320/120
Max. temperature of the pumped liquid (5 min)	70°C
Min. incoming water connection (mm)	182
Type of impeller	Pro X K2 grinder
Identification and logistics	
Gross weight (kg)	31
Barcode	3308815079318
Product code	**40000**

Sanifos 280

Grey water, storm water

The Sanifos 280 is a grey water lifting station designed to lift the waste water from a larger household: WC, sink, washing machine etc. It consists of a 280 litre tank and a pump with float switch. It is available in 2 different pump versions: grinder with Pro X K2 technology or vortex. Sanifos 280 comes with its own pipework with shut-off valve and non-return valve and the bottom of the tank is self-cleaning. A 30 cm extension is available as an option.

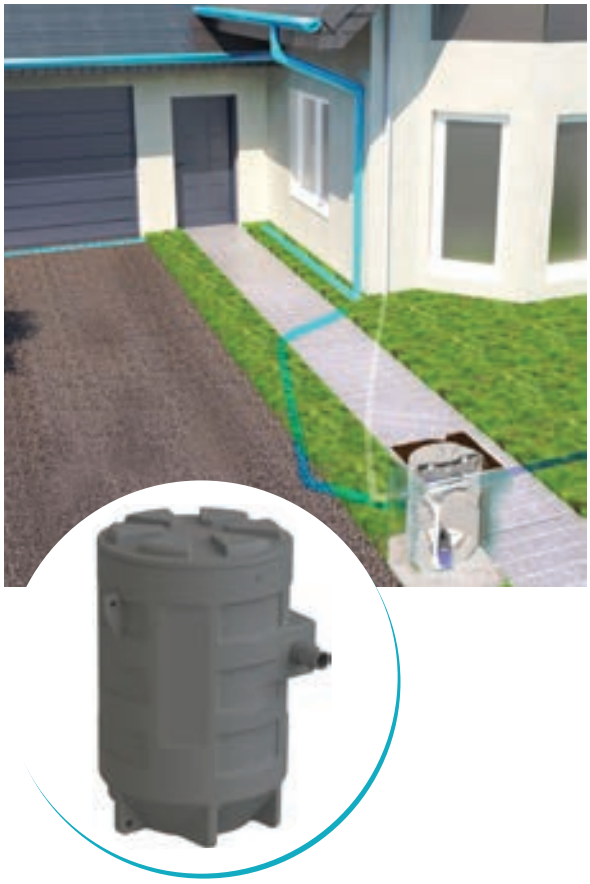

PERFORMANCE

- Max. Head: 10 m
- Max. Flow rate: 13 m³/h

DEPENDING ON MODEL

PRODUCT BENEFITS

- Easy installation: preassembled elements
- 3 drilling zones available for incoming water connections
- Automatic operation
- Bottom of the tank is self-cleaning
- Non-return valves and shut-off valves included

DELIVERED AS STANDARD



Sanifos 280 ZPK 40 A



Sanifos 280 Steel

- Tank with pre-assembled hydraulic, isolation valve and non-return valve, Sanisub ZPK 40 A or Sanisub Steel 50 A pump, PVC pipe, pedestrian cover



Sanisub ZPK 40 A



Sanisub Steel 50 A



Closed impeller

OPTIONAL EXTRAS



Sanifos 280 extension
Barcode: 3308815081298
Product code: 40502





Sanifos alarm for 1 pump versions if required
Barcode: 3308815081625
Product code: 40501



Isolation valve DN50 shut-off valve
Product code: 1109



Isolation valve DN100 shut-off valve
Product code: 1107/1

DIMENSIONS

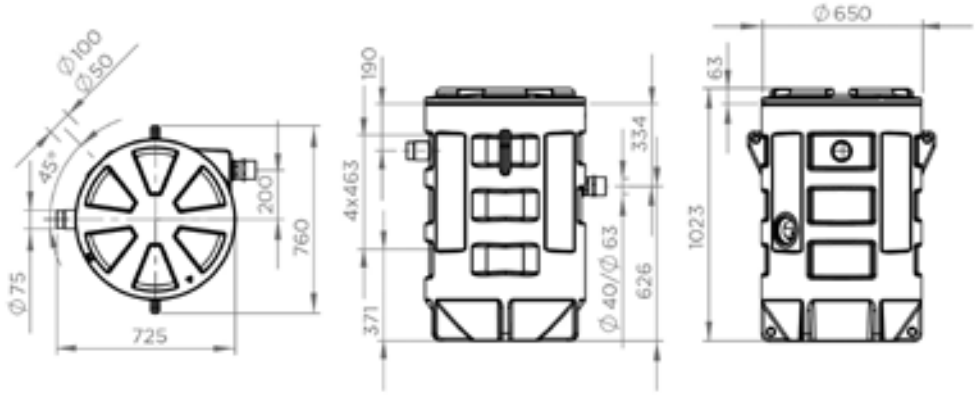

Dimensions (mm)

CURVE

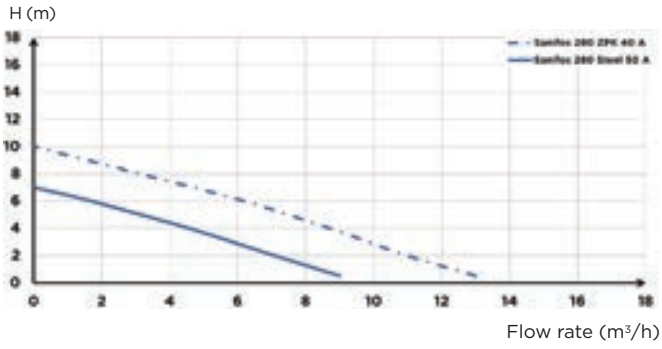

CONNECTIONS



External inlet diameter: 50, 100 mm

External discharge diameter: 50 mm

External ventilation diameter: 75 mm

	Sanifos 280 ZPK 40 A	Sanifos 280 Steel
Type of activation	Float	Float
Number of pumps	1	1
Material		
Tank	PE HD	HDPE
Pipework	PVC	PVC
Electrical features		
See electrical features for ZPK 40 A pump on page 127 and for Sanisub Steel pump page 129		
Hydraulics		
Max. Head (m)	10	7
Max. Flow rate (m³/h)	13	9
External inlet diameter (mm)	50, 100	50, 100
External discharge diameter (mm)	50	50
External ventilation diameter (mm)	75	75
Total volume (L)	280	280
Free passage (mm)	30	10
Max. temperature of the pumped liquid (5 min)	90°C	70°C
Min. incoming water connection (mm)	180	180
Max. incoming water connection (mm)	550	550
Max. incoming water connection if option is available (mm)	885	885
Type of impeller	Closed impeller	Closed impeller
Identification and logistics		
Gross weight (kg)	48.6	46.5
Barcode	3308815085968	3308815085975
Product code	**41002**	**41003**

Sanifos 280

Grey water, black water

The Sanifos 280 is a lifting station designed to lift the waste water from a larger household: WC, sink, washing machine etc. It consists of a 280 litre tank and a pump with float switch. It is available in 2 different pump versions: grinder with Pro X K2 technology or vortex. Sanifos 280 comes with its own pipework with shut-off valve and non-return valve and the bottom of the tank is self-cleaning. A 30 cm extension is available as an option.

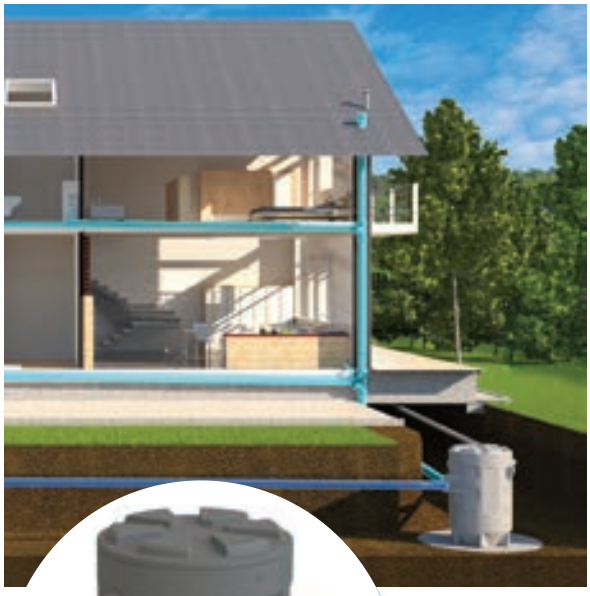



PERFORMANCE

- Max. Head: 14 m
- Max. Flow rate: 26 m³/h

DEPENDING ON MODEL

PRODUCT BENEFITS

- Easy installation: preassembled elements
- 3 drilling zones available for incoming water connections
- 2 pump versions: grinder or vortex
- Automatic operation
- Bottom of the tank is self-cleaning
- Non-return valves and shut-off valves included

DELIVERED AS STANDARD



- Tank with pre-assembled hydraulics, isolation valve and non-return valve, Sanipump GR or VX, handling chain, IP68 terminal block, cable gland



Sanipump GR S



Sanipump VX S



Pro X K2 grinder



Vortex

OPTIONAL EXTRAS



Sanifos 280 extension
Barcode: 3308815081298
Product code: 40502





Sanifos alarm for 1 pump versions if required
Barcode: 3308815081625
Product code: 40501



Isolation valve DN50 shut-off valve
Product code: 1109



Isolation valve DN100 shut-off valve
Product code: 1107/1

DIMENSIONS

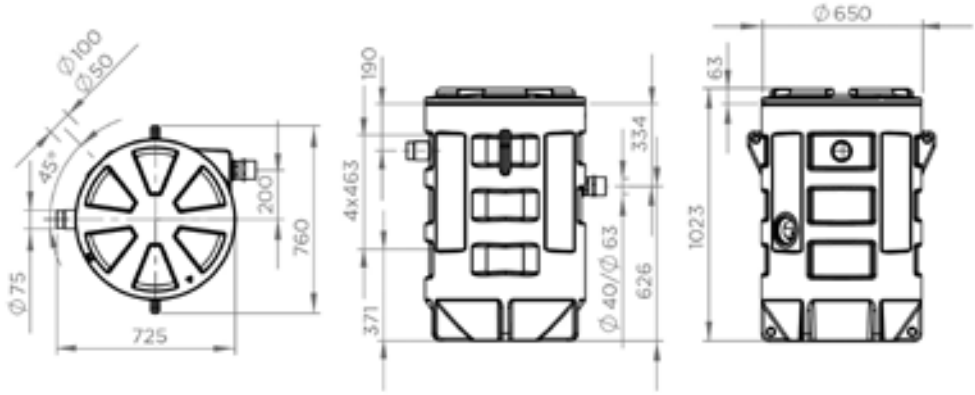

Dimensions (mm)

CURVE

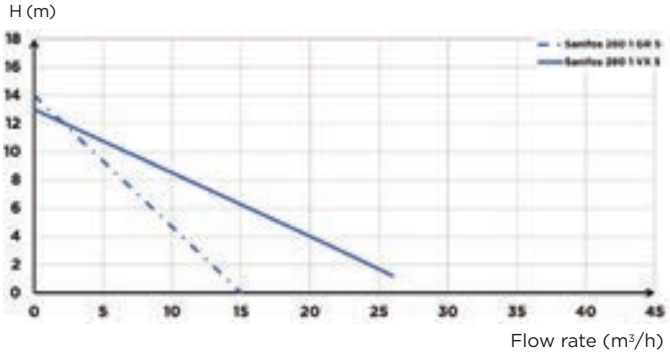

CONNECTIONS



External inlet diameter: 50, 100 mm

External discharge diameter: 50 mm

External ventilation diameter: 75 mm

	Sanifos 280 1GR S	Sanifos 280 1VX S
Type of activation	Float	Float
Number of pumps	1	1
Material		
Tank	HDPE	HDPE
Pipework	PVC	PVC
Electrical features		
See electrical features for pump on page 135		
Hydraulics		
Max. Head (m)	14	13
Max. Flow rate (m³/h)	15	26
External inlet diameter (mm)	50, 100	50, 100
External discharge diameter (mm)	50	63
External ventilation diameter (mm)	75	75
Total volume (L)	280	280
Free passage (mm)	-	50
Max. temperature of the pumped liquid (5 min)	70°C	70°C
Min. incoming water connection (mm)	180	180
Max. incoming water connection (mm)	585	585
Max. incoming water connection if option is available (mm)	885	885
Type of impeller	Pro X K2 grinder	Vortex
Identification and logistics		
Gross weight (kg)	55	55
Barcode	3308815083117	3308815081304
Product code	**40001**	**40002**

Sanifos 610

Grey water, rainwater

The Sanifos 610 rainwater is designed to lift rainwater or grey water depending on the pump chosen. It consists of a 610 litre tank, one or two pumps and integrated float switch(s). It comes in 3 different configurations: 1 single-phase pump, 2 single-phase pumps or 2 three-phase pumps. The Sanifos lifting station comes with PVC pipework, shut-off valve(s) and non-return valve(s). A 30cm extension is available as an option.





PERFORMANCE

- Max. Head: 14 m
- Max. Flow rate: 35 m³/h

DEPENDING ON MODEL

PRODUCT BENEFITS

- Easy installation: pre-mounted pipework
- 4 drilling zones available for incoming water connection
- 5 versions available: single or dual pump, single or three phase, with or without radar
- Smart control box comes with 2 pump versions

DELIVERED AS STANDARD



Tank with pre-assembled hydraulics, 2 isolation valves and non-return valves, 3 floats installed in the tank, 1 or 2 Sanipump SLD 700, waterproof terminal block, cable gland, Smart control box with alarm (with 2 pump versions)



Sanipump SLD 700



Smart box (with 2 pump versions)



Wired alarm box



Two-channel impeller for rainwater

OPTIONAL EXTRAS



Sanifos 610 extension

Barcode: 3308815077826
Product code: 40503





Sanifos alarm for 1 pump versions if required

Barcode: 3308815081625
Product code: 40501



Isolation valve DN50 shut-off valve

Product code: 1109



Isolation valve DN100 shut-off valve

Product code: 1107/1

DIMENSIONS

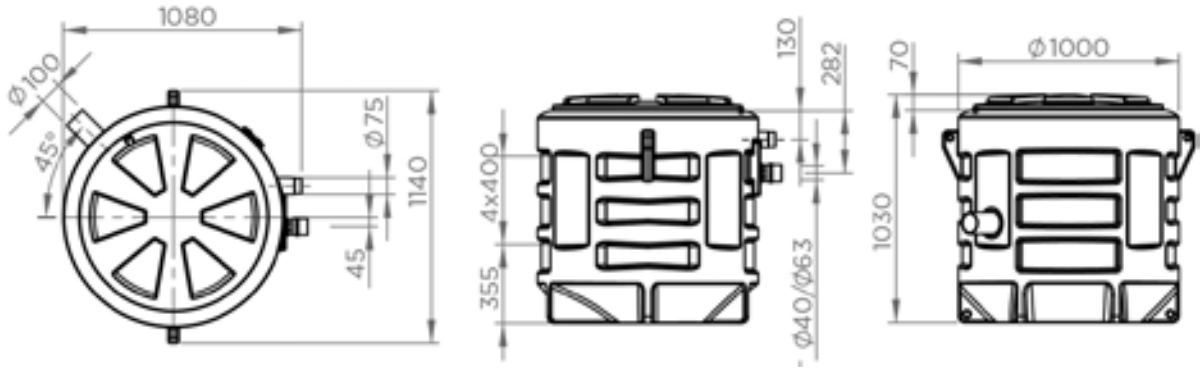

Dimensions (mm)

CURVE

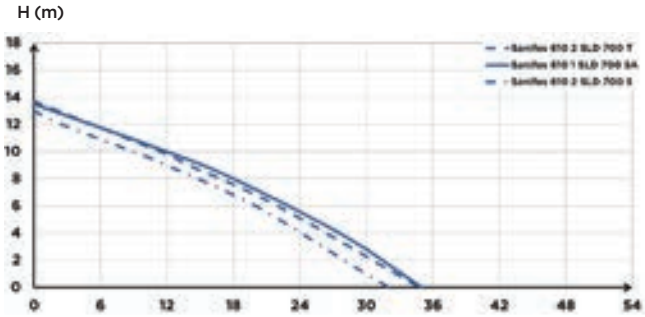

CONNECTIONS



External inlet diameter: 50, 100 mm

External discharge diameter: 63 mm

External ventilation diameter: 75 mm

	Sanifos 610 1 SLD 700 SA	Sanifos 610 2 SLD 700 S	Sanifos 610 2 SLD 700 T	Sanifos 610 2 SLD 700 S RD	Sanifos 610 2 SLD 700 T RD
Type of activation	Float	Float	Float	Radar technology	Radar technology
Type of control box	-	Smart	Smart	Smart	Smart
Number of pumps	1	2	2	2	2
Material					
Tank	HDPE	HDPE	HDPE	HDPE	HDPE
Pipework	PVC	PVC	PVC	PVC	PVC
Electrical features					
See electrical features for pump on page 141					
Hydraulics					
Max. Head (m)	13.5	13	14	13	14
Max. flow rate (m³/h)	35	32	35	32	35
External inlet diameter (mm)	50, 100	50, 100	50, 100	50, 100	50, 100
Discharge diameter ext. (mm)	63	63	63	63	63
Ext. ventilation diameter (mm)	75	75	75	75	75
Total volume (L)	610	610	610	610	610
Useable volume (L)	190	100	100	100	100
ON Level /OFF level (mm)	-	470/50	470/50	470/50	470/50
Alarm level (mm)	-	570	570	570	570
Free passage (mm)	50	50	50	50	50
Max. temperature of the pumped liquid (5 min)	70°C	70°C	70°C	70°C	70°C
Min. incoming water connection (mm)	325	325	325	325	325
Max. incoming water connection (mm)	670	670	670	670	670
Max. incoming water connection if option is available (mm)	1070	1070	1070	1070	1070
Type of impeller	Two-channel	Two-channel	Two-channel	Two-channel	Two-channel
Identification and logistics					
Gross weight (kg)	85	135	131	136	136
Barcode	3308815084145	3308815084152	3308815084169	3308815096223	3308815096230
Product code	**41004**	**41005**	**41006**	**51003**	**51004**

Sanifos 610

Grey water, black water

The Sanifos 610 is a lifting station designed to lift grey water and black water from houses, commercial premises or a group of dwellings. It consists of a 610 litre tank and one or two pumps with integrated float switch(es) and the bottom of the tank is self-cleaning. It is available in 8 different single-phase or three-phase versions with a grinder pump or vortex pump or radar technology. The lifting station comes with shut-off valve(s) and non-return valve(s). The 2-pump versions come with an interactive monitoring system: the smart control box.





PERFORMANCE

- Max. Head: 17 m
- Max. Flow rate: 29 m³/h

DEPENDING ON MODEL

PRODUCT BENEFITS

- Easy installation: pre-mounted pipework
- 4 drilling zones available for incoming water connection
- 8 versions available: single or dual pump, single or three phase
- 2 types of pump available, either grinder or vortex
- Smart control box comes with the 2 pump versions

DELIVERED AS STANDARD



Tank with pre-assembled hydraulics, 2 isolation valves and non-return valves, 3 floats installed in the tank, 1 or 2 Sanipump GR or VX, handling chain, waterproof terminal block, cable gland, Smart control box with alarm (with 2 pump versions)



Sanipump GR S



Sanipump VX S



Smart box (with 2 pump versions)



Pro X K2 grinder



Vortex

OPTIONAL EXTRAS



Sanifos 610 extension

Barcode: 3308815077826
Product code: 40503





Sanifos alarm for 1 pump versions if required

Barcode: 3308815081625
Product code: 40501



Isolation valve DN50 shut-off valve

Product code: 1109



Isolation valve DN100 shut-off valve

Product code: 1107/1

DIMENSIONS

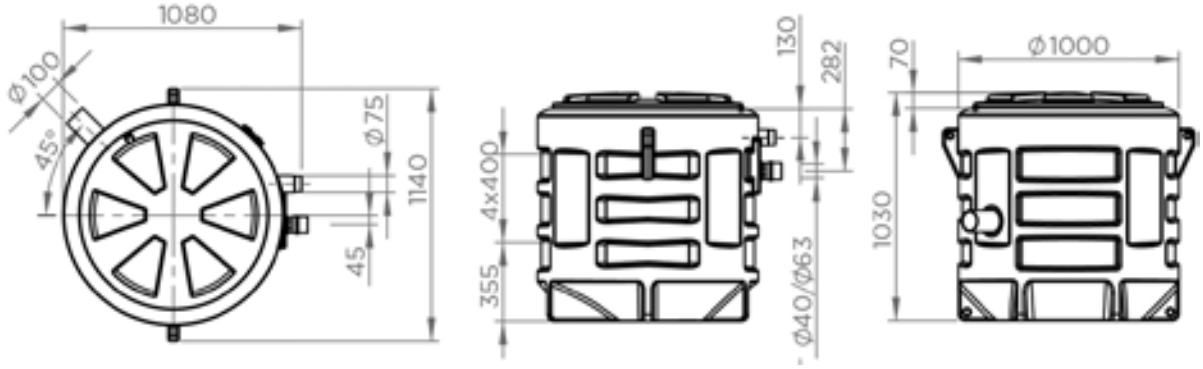

Dimensions (mm)

CURVE

H (m)

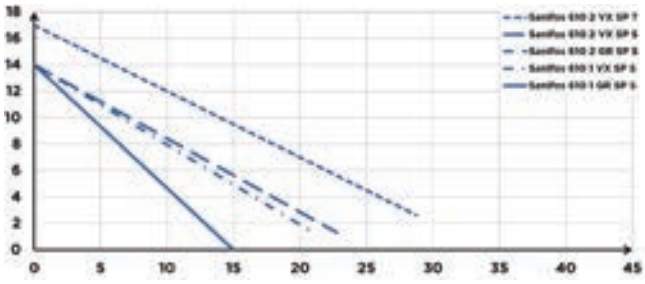

Flow rate (m^3/h)

CONNECTIONS



External inlet diameter: 50, 100 mm

External discharge diameter: 50 mm

External ventilation diameter: 75 mm

	Sanifos 610 1 GR SP S	Sanifos 610 1 VX SP S	Sanifos 610 2 GR SP S	Sanifos 610 2 VX SP S	Sanifos 610 2 VX SP T	Sanifos 610 2 GR SP S RD	Sanifos 610 2 VX SP S RD	Sanifos 610 2 VX SP T RD
Type of activation	Float	Float	Float	Float	Float	Radar technology	Radar technology	Radar technology
Type of control box	-	-	Smart	Smart	Smart	Smart	Smart	Smart
Number of pumps	1	1	2	2	2	2	2	2
Material								
Tank	HDPE	HDPE	HDPE	HDPE	HDPE	HDPE	HDPE	HDPE
Pipework	PVC	PVC	PVC	PVC	PVC	PVC	PVC	PVC
Electrical features								
See electrical features for pump on page 135								
Hydraulics								
Max. Head (m)	14	14	14	14	17	14	14	17
Max. flow rate (m^3/h)	16	21	15	23	29	15	23	29
External inlet diameter (mm)	50, 100	50, 100	50, 100	50, 100	50, 100	50, 100	50, 100	50, 100
Discharge diameter ext. (mm)	50	63	50	63	63	50	63	63
Ext. ventilation diameter (mm)	75	75	75	75	75	75	75	75
Total volume (L)	610	610	610	610	610	610	610	610
Useable volume (L)	150	160	170	170	170	170	170	170
ON Level /OFF level (mm)	-	-	390/90	390/90	390/90	390/90	390/90	390/90
Alarm level (mm)	-	-	570	570	570	570	570	570
Free passage (mm)	-	50	-	50	50	-	50	50
Max. temperature of the pumped liquid (5 min)	70°C	70°C	70°C	70°C	70°C	70°C	70°C	70°C
Min. incoming water connection (mm)	325	325	325	325	325	325	325	325
Max. incoming water connection (mm)	670	670	670	670	670	670	670	670
Max. incoming water connection if option is available (mm)	1070	1070	1070	1070	1070	1070	1070	1070
Type of impeller	Pro X K2 grinder	Vortex	Pro X K2 grinder	Vortex	Vortex	Pro X K2 grinder	Vortex	Vortex
Identification and logistics								
Gross weight (kg)	125	125	140	140	140	141	141	141
Barcode	3308815081687	3308815083094	3308815083087	3308815083100	3308815081663	3308815096193	3308815096209	3308815096216
Product code	**40003**	**40004**	**40005**	**40006**	**40007**	**51000**	**51001**	**51002**

Sanifos 1300

Grey water, black water

The Sanifos 1300 is a station designed to lift waste water from buildings, business premises or homes. It consists of a 1300 litre tank and two pumps. It is available in 6 different configurations: single-phase grinder impeller, single-phase vortex impeller or three-phase vortex impeller or radar technology. This station is delivered with an interactive monitoring system, the smart control box.





PERFORMANCE

- Max. Head: 17 m
- Max. Flow rate: 33 m³/h

DEPENDING ON MODEL

PRODUCT BENEFITS

- Easy installation: pre-mounted hydraulics
- Guide rails for easy maintenance
- Variable incoming water connection
- Self-cleaning sloping tank bottom
- Delivered with Smart control box

DELIVERED AS STANDARD



Tank with pre-assembled hydraulics, 2 isolation valves, 2 non-return valves and 3 floats installed in the tank. 2 submersible pumps (either grinder or vortex), stainless steel handling chains with fixing shackles, cable glands, waterproof terminal blocks, 1 tank seal, 1 drilling template, Smart control unit with alarm.



Sanipump GR S



Pro X K2 grinder



Sanipump VX S



Vortex



Smart box (with 2 pump versions)

OPTIONAL EXTRAS



Sanifos 610 extension
Barcode: 3308815077826
Product code: 40503



Isolation valve
DN50 shut-off valve
Product code: 1109



Isolation valve
DN100 shut-off valve
Product code: 1107/1

DIMENSIONS

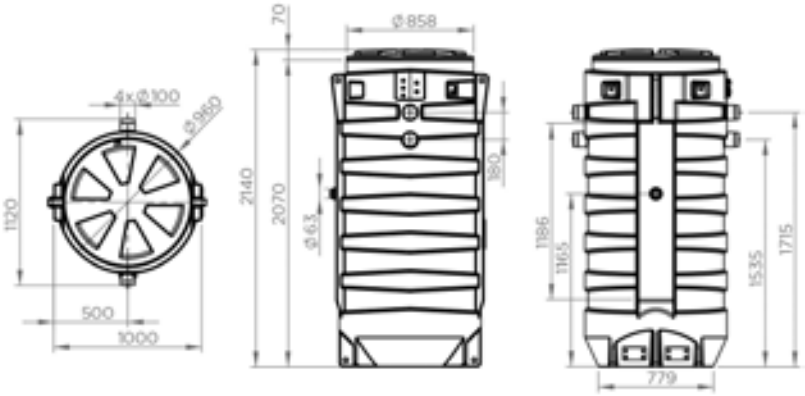

Dimensions (mm)

CURVE

H (m)

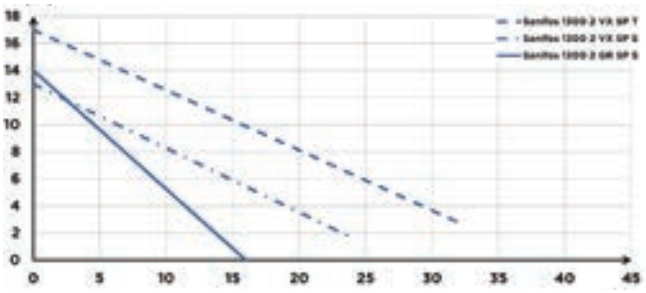

Flow rate (m^3/h)

CONNECTIONS



External inlet diameter: 160 mm

External discharge diameter: 50 mm

External ventilation diameter: 100 mm

	Sanifos 1300 2GR SP S	Sanifos 1300 2VX SP S	Sanifos 1300 2VX SP T	Sanifos 1300 2 GR SP S RD	Sanifos 1300 2 VX SP S RD	Sanifos 1300 2 VX SP T RD
Type of activation	Float	Float	Float	Radar	Radar	Radar
Type of control box	Smart	Smart	Smart	Smart	Smart	Smart
Number of pumps	2	2	2	2	2	2
Material						
Tank	HDPE	HDPE	HDPE	HDPE	HDPE	HDPE
Pipework	PVC	PVC	PVC	PVC	PVC	PVC
Electrical features						
See electrical features for pump on page 135						
Hydraulics						
Max. Head (m)	14	13	17	14	13	17
Max. flow rate (m^3/h)	16	25	33	16	25	33
External inlet diameter (mm)	160	160	160	160	160	160
Discharge diameter ext. (mm)	50	63	63	50	63	63
Ext. ventilation diameter (mm)	100	100	100	100	100	100
Total volume (L)	1300	1300	1300	1300	1300	1300
Useable volume (L)	350	350	350	350	350	350
ON Level /OFF level (mm)	600/200	600/200	600/200	600/200	600/200	600/200
Alarm level (mm)	930	930	930	930	930	930
Free passage (mm)	-	50	50	-	50	50
Max. temperature of the pumped liquid (5 min)	70°C	70°C	70°C	70°C	70°C	70°C
Min. incoming water connection (mm)	600	600	600	600	600	600
Max. incoming water connection (mm)	1600	1600	1600	2000	2000	2000
Max. incoming water connection if option is available (mm)	2000	2000	2000	1600	1600	1600
Type of impeller	Pro X K2 grinder	Vortex	Vortex	Pro X K2 grinder	Vortex	Vortex
Identification and logistics						
Gross weight (kg)	186	186	186	187	187	187
Barcode	3308815077796	3308815077802	3308815077819	3308815096254	3308815096261	3308815096278
Product code	**40008**	**40009**	**40010**	**51005**	**51006**	**51007**

Sanifos 1600/2100/3100

Create your **TAILOR-MADE** lifting station

Depending on your project the Sanifos can be tailor-made for your requirements. Here are the different steps to finding the configuration you need.



Choose:

1 Your station

Depending on the number of devices you want to connect to your station, different tank volumes are available. All tanks can accommodate 1 pump or 2 pumps.

2 Your pump

Depending on the type of water that needs to be removed for your project, you can choose a submersible pump that is suitable. For grey water we recommend ZPG, for black water ZFS.

3 Your control box

Choose the box suitable for your needs. Options available are with floats or pneumatic detection.

4 Your accessories

Chains and shackles are included, but you can choose different covers and a fall protection grid. For a tank with floats – 3 are required in a single pump version, 4 in a twin pump version, two sizes of floats are available.

1 Your station

APPLICATIONS

- Lifting of black water (ZFS) or rainwater (ZPG) from individual houses or public buildings
- Outdoor installation
- Different covers available

ADVANTAGES

- Adjustable extension height
- DN32 stainless steel piping, pre-assembled with coupling system
- Non-return valve, shut-off valve and 1" connectors
- HDPE outlet 63 x 5.8, external to the manhole
- 2 DN 100 connections for cable glands
- This unit can be made to your requirements please contact us for more information

DIMENSIONS

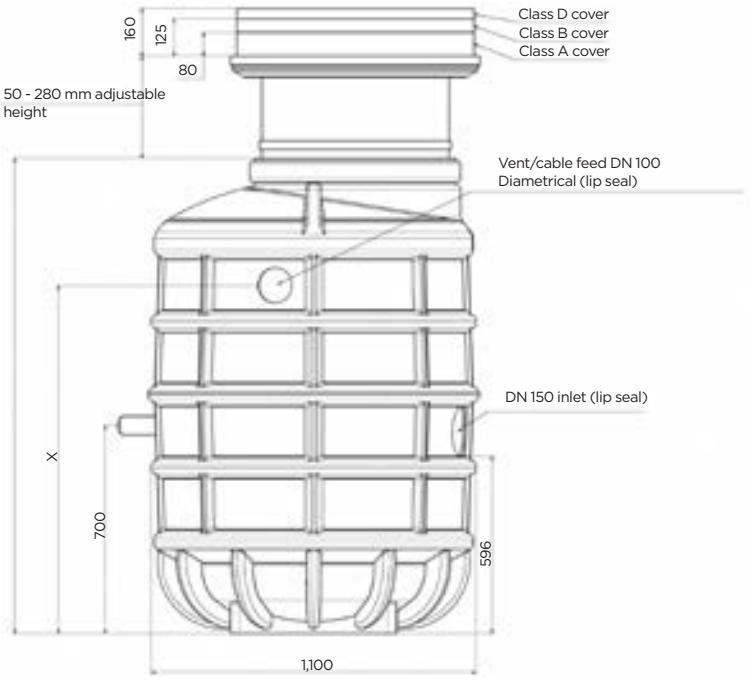

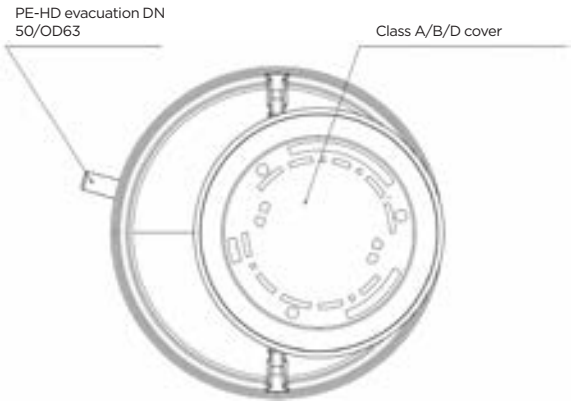

Bowl height in mm	X
3,100	2,675
2,100	1,675
1,600	1,175

Dimensions (mm)

	Sanifos 1600-1	Sanifos 1600-2	Sanifos 2100-1	Sanifos 2100-2	Sanifos 3100-1	Sanifos 3100-2
Type of control box	ZPS 1	ZPS 2	ZPS 1	ZPS 2	ZPS 1	ZPS 2
Number of pumps	1	2	1	2	1	2
Material						
Tank	PE	PE	PE	PE	PE	PE
Guide bars	Stainless steel	Stainless steel	Stainless steel	Stainless steel	Stainless steel	Stainless steel
Pipework	Stainless steel	Stainless steel	Stainless steel	Stainless steel	Stainless steel	Stainless steel
Hydraulics						
External discharge diameter DN	50	50	50	50	50	50
External ventilation diameter DN	100	100	100	100	100	100
External inlet diameter DN	150	150	150	150	150	150
Volume total (L)	1000	1000	1370	1370	2140	2140
ON level /OFF level (mm)	Adjustable using the control box					
Max. invert level (mm)	1000	1000	1500	1500	2500	2500
Max. with 280 mm extension (mm)	1440	1440	1940	1940	2940	2940
Max. with 500 mm extension (mm)	1940	1940	2440	2440	3440	3440
Identification and logistics						
Barcode	3308815081885	3308815081915	3308815081892	3308815081922	3308815081908	3308815081939
Product code	**14479**	**14490**	**14474**	**14477**	**14475**	**14478**

2 Your pump

Sanipump ZPG 71



- For pumping rainwater or black water
- Cast iron pump with vortex impeller
- Suitable for use in a manhole or pit

Details on page 136

Description	Barcode	Product code
SANIPUMP ZPG 71.1 S	3308815081533	21857
SANIPUMP ZPG 71.1 T	3308815081540	21858
SANIPUMP ZPG 71.2 T	3308815081557	21859
SANIPUMP ZPG 71.3 T	3308815081564	21860

Sanipump ZFS 71



- All waste water
- Cast iron grinder impeller pump
- Ideal for high total dynamic Head requirements
- Can be used for collective sanitary facilities, such as public buildings and apartment blocks

Details on page 138

Description	Barcode	Product code
SANIPUMP ZFS 71.1 S	3308815081571	21410
SANIPUMP ZFS 71.1 T	3308815081588	21411
SANIPUMP ZFS 71.2 T	3308815081595	21412
SANIPUMP ZFS 71.3 T	3308815081601	21413
SANIPUMP ZFS 71.4 T	3308815081618	21332

Sanipump VX 50



- For pumping waste water or rainwater
- Cast iron pump with vortex impeller
- Can be used in a manhole or pit

Details on page 142

Description	Barcode	Product code
SANIPUMP VX 50.1 S	3308815090139	31012
SANIPUMP VX 50.1 SA	3308815090146	31013
SANIPUMP VX 50.1 T	3308815090153	31014
SANIPUMP VX 50.2 S	3308815090160	31015
SANIPUMP VX 50.2 SA	3308815090177	31016
SANIPUMP VX 50.2 T	3308815090184	31017
SANIPUMP VX 50.3 S	3308815090191	31018
SANIPUMP VX 50.3 SA	3308815090207	31019
SANIPUMP VX 50.3 T	3308815090214	31020
SANIPUMP VX 50.4 S	3308815090221	31021
SANIPUMP VX 50.4 SA	3308815090238	31022
SANIPUMP VX 50.4 T	3308815090245	31023

3 Your control box



ZPS control box for the installation of one pump

- Wall mounted control box
- Available in pneumatic or float version
- Memory of the last 64 error messages
- Integrated audio and visual alarm
- Displays operating status by text and indicator light
- Automatic operation of one (or more) pumps
- Alternating operation for workstation with dual pumps



ZPS control box for the installation of two pumps

- Can switch on the 2nd pump if necessary
- Error messages displayed
- Level control via pressure transducer, float switch or 4–20 mA interface for external sensor
- Displays operating hours, electricity consumption as well as maintenance intervals

Details on page 152, Accessories.

Description	No. of pumps	Power	Barcode	Product code
ZPS 1 S PNEUMATIC VERSION	1	230 V	3308815081793	**21863**
ZPS 2 S PNEUMATIC VERSION	2	230 V	3308815081809	**21864**
ZPS 1 T PNEUMATIC VERSION	1	400 V	3308815081816	**21884**
ZPS 2 T PNEUMATIC VERSION	2	400 V	3308815081823	**21885**
ZPS 1 S FLOAT VERSION	1	230 V	3308815081830	**21865**
ZPS 2 S FLOAT VERSION	2	230 V	3308815081847	**21866**
ZPS 1 T FLOAT VERSION	1	400 V	3308815081854	**21867**
ZPS 2 T FLOAT VERSION	2	400 V	3308815081878	**21868**

4 Your accessories

AQUA XL

WEIGHTED FLOAT FOR STATIONS

Due to its weight (775 g) and volume this self-weighted level float, is perfectly suited to starting and stopping several pumps in waste water lifting stations, where sometimes thick layers of fat form on the surface.





Required:
- 3 floats for single pump versions
- 4 floats for 2 pump versions

Permissible fluid densities	0.95 to 1.05 g/cm³
Electrical characteristics	250 VAC 50-60 Hz
Breaking capacity	10 (4) A
Permissible operating pressure	2 bar
Maximum temperature	70 °C
IP rating	IP 68
Housing	Polypropylene copolymer
Cable type	PVC 3 x 0.75 mm
Cable-free float weight	775 g

Description	Barcode	Product code
AQUA XL 10 M	3308815082691	41000
AQUA XL 20 M	3308815082707	41001



STANDARD COVERS EN124

COVERS FOR PEDESTRIAN AND VEHICLE TRAFFIC

According to standard NF EN 124, lids are classified in the following categories: A15, B125 and D400.



CLASS A15
Areas that can be used exclusively by pedestrians and cyclists



CLASS B125
Footpaths, pedestrian areas and similar areas, parking areas and multi-storey car parks



CLASS D400
Traffic lanes, streets / roads (including pedestrian), hard shoulders and parking areas for all types of vehicles

Description	Barcode	Product code
COVER A	3308815081946	**16035**
COVER B	3308815081953	**16038**
COVER D	3308815081960	**16044**
COVER D + GAC 600	3308815082677	**30513**
COVER D + GAC 800	3308815082684	**30514**

FALL PROTECTION GRILL, OPTIONAL FOR COVER D

The fall protection grill keeps people safe when the cover is open for work or maintenance.

Features	GAC 600	GAC 800
Tube Rods	Ø 27/Ø 21	Ø 26.9 th. 2 mm
Material	316 L stainless steel	
Resistance	Static load capacity 500 kg maximum	
Spacing between each rod	53 mm	< 120 mm
Opening angle	> 100°	
Free passage A X B in mm	504 x 617	597 x 817
Weight in kg	9.3	13.5

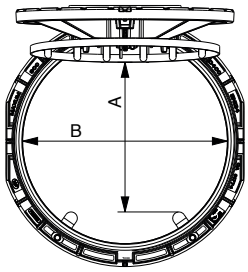



SUBMERSIBLE PUMPS

Our SFA range of submersible and cellar pumps is designed to meet a wide variety of applications, including flood water removal and drainage in cellars, basements and garages. Saniflo offers solutions to suit different site conditions, helping to manage excess water and reduce the risk of flooding.

Submersible pumps are essential for managing water across domestic, commercial and industrial settings. Designed to operate when fully submerged, they are ideal for removing, transferring and dealing with high volumes of water, particularly in flood situations. With solutions covering a wide range of water depths – from as little as 1 mm through to full immersion – Saniflo offers reliable options for a variety of applications.

Submersible Pumps

Product	Image	Clear water	Rainwater	Sewage			Waste water		Saline water
		Water from boreholes, wells, sumps, swimming pools		Flood water, basement drainage, runoff water...			Grey water	Black water	
		Particle size < 1 mm		Particle size			Washbasins, washing machines,...	WC	Waste from water softeners (<15%)
				< 10 mm	< 20 mm	< 30 mm			
Sanipuddle HMT = 7 m Q = 5.5 m³/h P.118		●							
Sanisub 400/800 HMT = 7.5 m Q = 7 m³/h P.120		●		●			●		
HMT = 11 m Q = 15 m³/h		●	●		●		●		
Sanisub ZPK/S ZPK HMT = 10 m Q = 10 m³/h P.122		●	●	●	●	●	●		
		●	●	●		●	●		●
Sanisub Steel 50A HMT = 7.5 m Q = 9 m³/h P.124		●		●			●		
Sanisub Steel and Emergency Kit HMT = 7.5 m Q = 9 m³/h P.126		●		●			●		
Sanisub 800 Rainkit HMT = 11 m Q = 15 m³/h P.128		●	●		●		●		
Sanipump GR HMT = 14 m Q = 15 m³/h P.130		●		●			●	●	
Sanipump VX HMT = 14 m Q = 27 m³/h		●		●			●	●	
Sanipump ZPG 71 HMT = 31 m Q = 43 m³/h P.132		●	●	●	●	●	●		
Sanipump ZFS 71 HMT = 39 m Q = 17 m³/h P.134		●		●	●	●	●	●	
Sanipump SLD 700 HMT = 14 m Q = 48 m³/h P.136		●	●	●	●	●	●	●	
Sanipump VX 50 HMT = 16 m Q = 29 m³/h P.138		●	●	●	●	●	●	●	
Sanipump VX 65/80 HMT = 35 m Q = 110 m³/h P.142		●	●	●	●	●	●	●	

Sanipuddle

The Sanipuddle is a submersible pump which removes clear water or rainwater from cellars, laundries, swimming pool floors, spas or lift shafts and can remove water down to 1 mm. Sanipuddle can lift water up to 7 m. Non-return valve and power cable included. An electronic control level is available as an option.







PERFORMANCE

- Max. Head: 7 m
- Max. flow rate: 5.5 m^3/h

PACKAGING

Sanipuddle pump, supply cable (10m), non-return valve

PRODUCT BENEFITS

- High-quality polypropylene and stainless steel pump
- Drains down to 1 mm of water
- Double mechanical seal
- Integrated non-return valve

CURVE

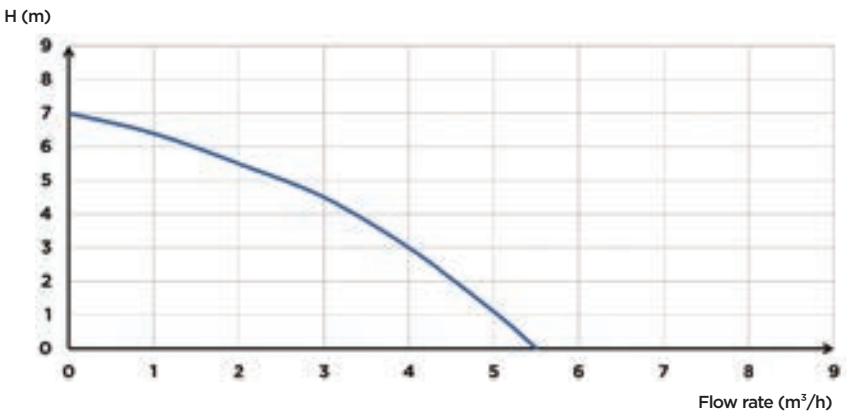

DIMENSIONS

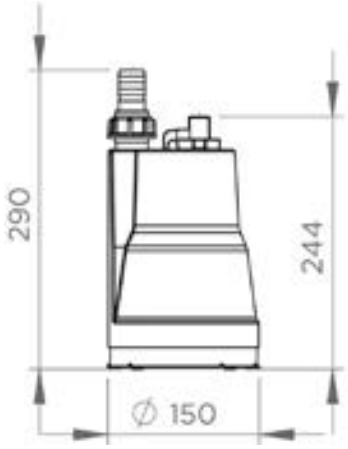

Dimensions (mm)

	Sanipuddle
Type of activation	Manual
Material	
Shaft	Stainless steel
Pump housing	PP GF
Seal	Carbon/ceramic/NBR
Motor housing	Stainless steel
Impeller	PA 6 GF
Electrical features	
Voltage (V)	230
Frequency (Hz)	50-60
Power consumption P1 (W)	300
Power output P2 (W)	160
Revolution per minute (RPM)	2800
Electrical class	I
Immersion depth (m)	5
Power cable: Length (m)	10
Hydraulics	
Max. Head (m)	7
Max. flow rate (m^3/h)	5.5
Discharge diameter (inch)	1
Particle size (mm)	1
Max. temperature of the pumped liquid (5 min)	70°C
Type of impeller	Multi-channel
Identification and logistics	
Gross weight (kg)	3.77
Barcode	3308815081427
Product code	**22044**

ELECTRONIC LEVEL CONTROL FOR SANIPUDDLE



The electronic level controller is used for controlling the level of fluids in tanks or pits when very precise control is required or when the level of fluids must be very low. It consists of 4 stainless steel electrodes, an electrode holder, a mounting bracket, a 10 m cable and a plug-in control adapter.

Barcode	Product code
3308815083025	**22025**

Sanisub 400/800

The Sanisub 400 and Sanisub 800 are submersible pumps for clear water, designed for pumping flood water from living areas or basements. They can lift water up to 7.5 m for the Sanisub 400 and up to 11 m for the Sanisub 800. They activate automatically thanks to their integrated lever float switch. Versatile, they can be converted into a low-suction pump for residual water by using its removable drain and the float lock for continuous operation.

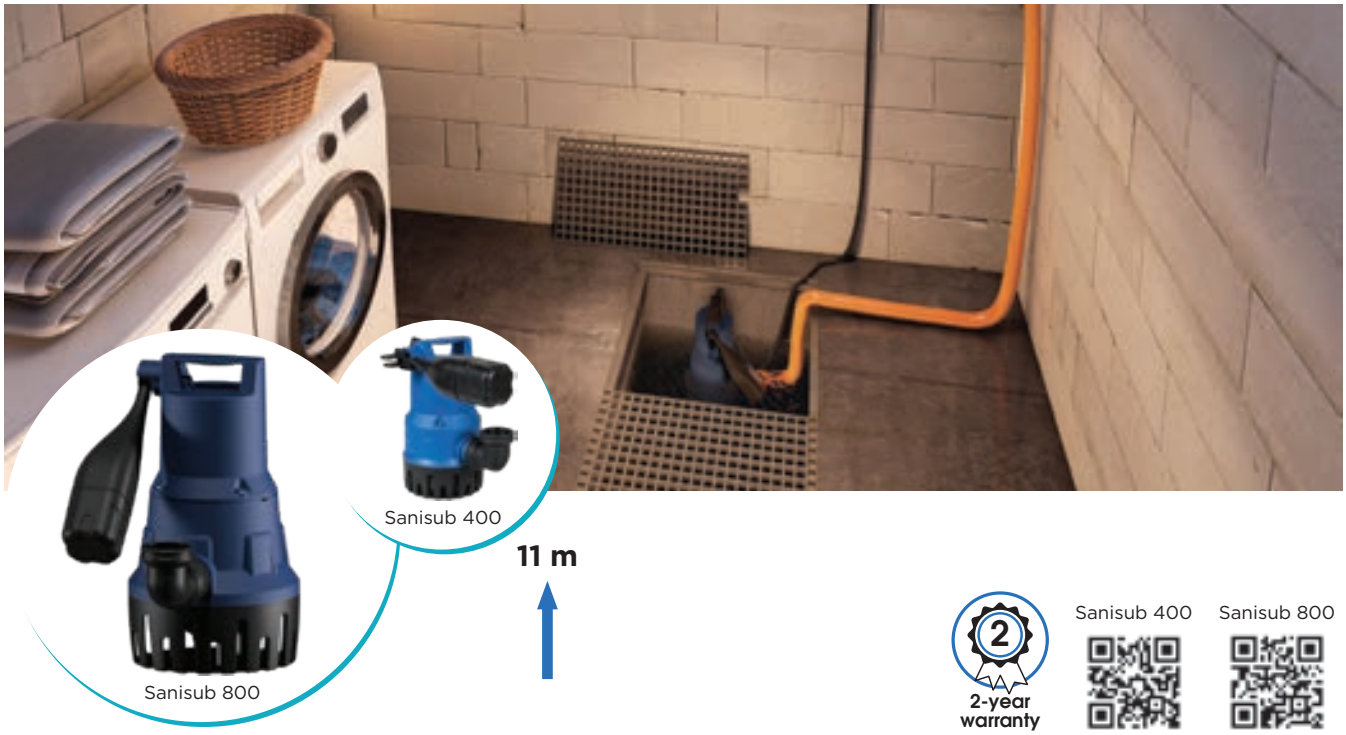

2-year warranty
See page 9

Sanisub 400 Sanisub 800

PERFORMANCE

- Max. Head: 11 m
- Max. flow rate: 15 m³/h

DEPENDING ON MODEL

PACKAGING

Sanisub pump with 10 m or 20 m power cable depending on the model, 90° elbow connection, non-return valve

PRODUCT BENEFITS

- Automatic activation
- Immersion depth of 7 m
- Suction down to 5 mm without the drain
- Integrated non-return valve
- Float locking ring included

CURVE

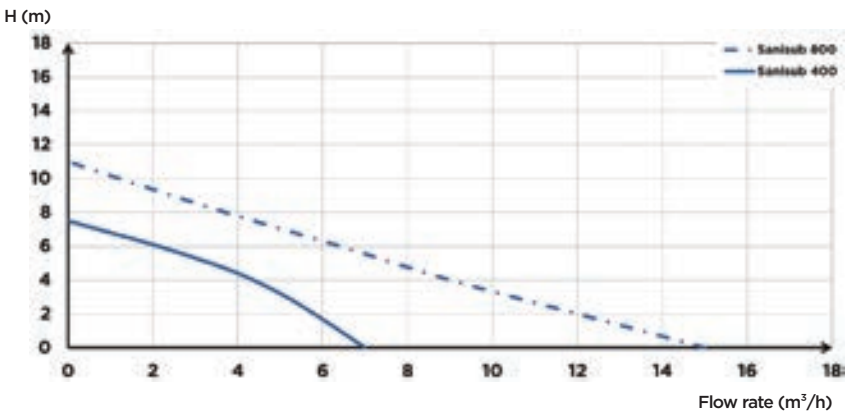

DIMENSIONS

Sanisub 400

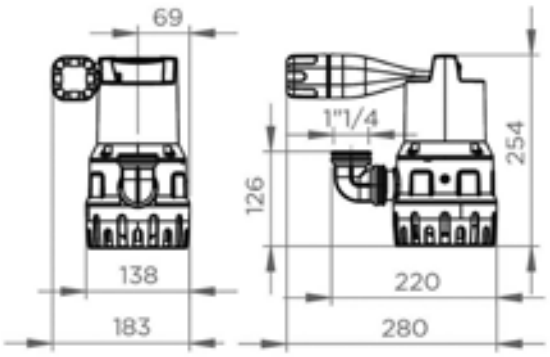

Sanisub 800

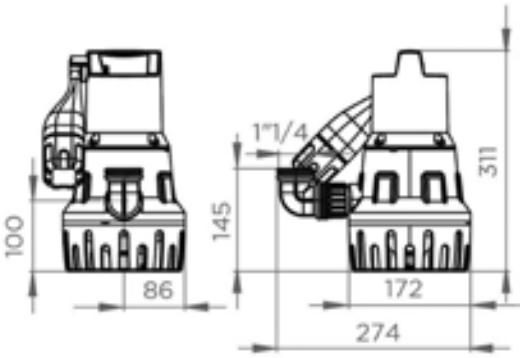

Dimensions (mm)

	Sanisub 400	Sanisub 800
Type of activation	Float	Float
Material		
Shaft	Stainless steel	Stainless steel
Pump housing	PP GF	PP GF
Seal	NBR	NBR
Motor housing	Stainless steel	Stainless steel
Impeller	PA 6 GF	PA 6 GF
Electrical features		
Voltage (V)	230	230
Frequency (Hz)	50-60	50-60
Power consumption P1 (W)	400	800
Power output P2 (W)	180	600
Revolution per minute (RPM)	2800	2800
Electrical class	I	I
Submerged	S1	S1
Immersion depth (m)	7	7
Power cable: Length (m)	10	20
Hydraulics		
Max. Head (m)	7.5	11
Max. Flow rate (m^3/h)	7	15
Discharge diameter (inch)	$1^{1/4}$	$1^{1/4}$
ON level /OFF level (mm)	200/50	250/130
Particle size (mm)	10	20
Max. temperature of the pumped liquid (5 min max)	70 °C	70 °C
Type of impeller	Multi-channel	Multi-channel
Identification and logistics		
Gross weight (kg)	6	9
Barcode	3308815081632	3308815096308
Product code	**33101**	**33105**

Sanisub ZPK/S ZPK

Sanisub ZPK/S ZPK are high-performance submersible pumps designed for pumping slightly contaminated or saline water, ideal for cellars, garages, rainwater drains, as well as saline from water softeners. Available in five models, the Sanisub ZPK and Sanisub S ZPK pumps withstand water temperatures up to 90°C for 5 minutes, activate automatically thanks to an adjustable float switch, and can pump water up to 10 m with a particle size of 10 to 30 mm, depending on the model. Each version comes with a 90° DN 25 or DN 32 connection elbow (depending on the model) and a 10 m power cable.

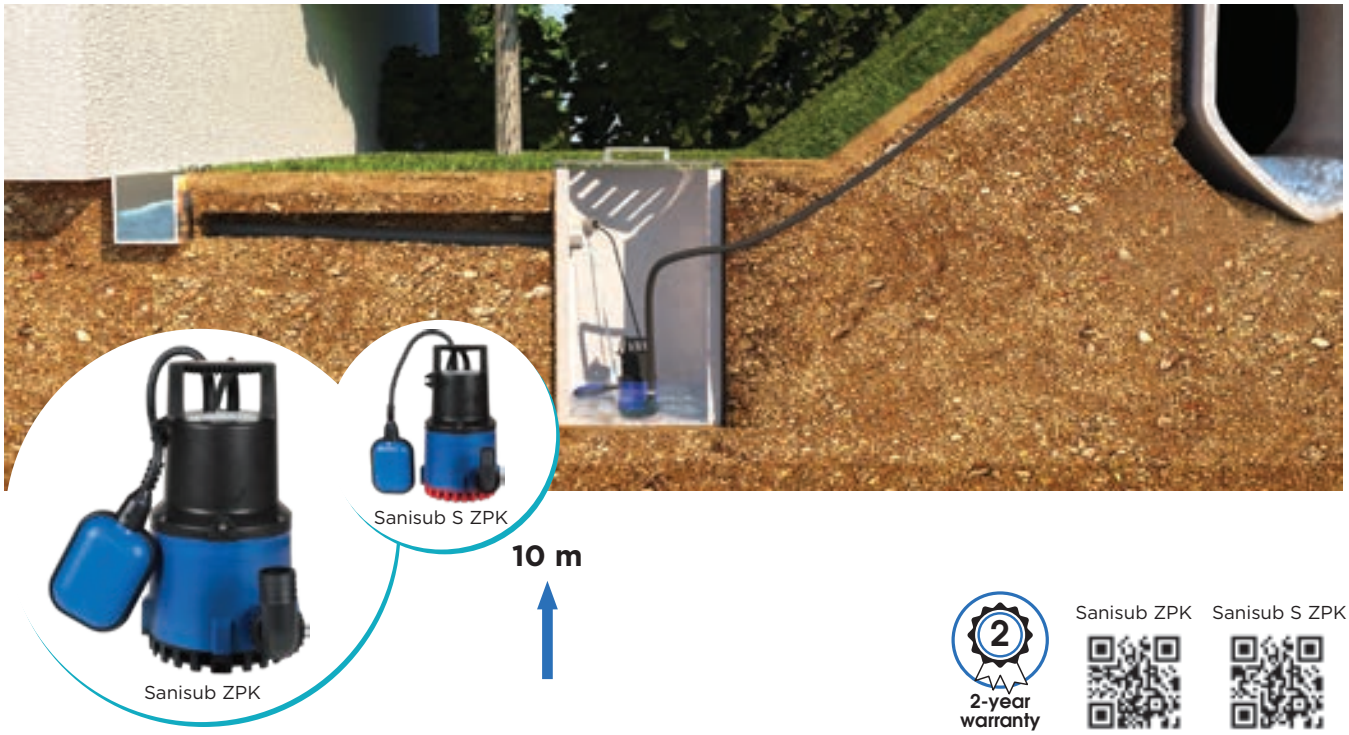

2-year warranty
See page 9

Sanisub ZPK Sanisub S ZPK

PERFORMANCE

- Max. Head: 10 m
- Max. flow rate: 10 m³/h

DEPENDING ON MODEL

PACKAGING

Sanisub ZPK: 90° elbow connection (ZPK 30 A: DN 25 or ZPK 40 A and ZPK 40 AV: DN 32), non-return valve, 10 m power cable Sanisub S ZPK: 90° elbow connection (S ZPK 30 A: DN 25 or S ZPK 40 A: DN 32), non-return valve, 10 m power cable

PRODUCT BENEFITS

- Lifting height up to 10 m
- Can pump water with particle size of 10 mm - 30 mm depending on the model
- Water resistance up to 90 °C (short periods)
- Suitable for the discharge of saline water (S ZPK only)
- Adjustable vertical float for the ZPK 40 AV version

CURVE

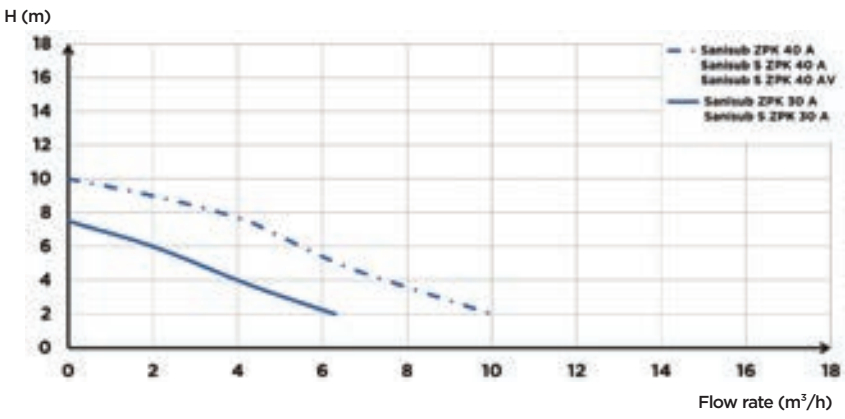

DIMENSIONS

Sanisub ZPK/S ZPK 30 A

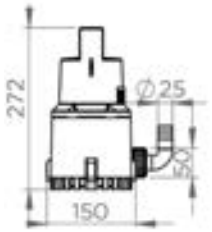

Sanisub ZPK/S ZPK 40 A

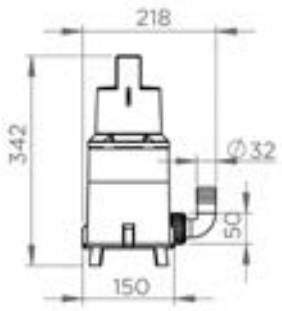

Sanisub ZPK 40 AV

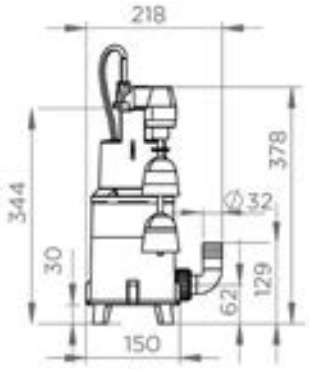

Dimensions (mm)

	Sanisub ZPK 30 A	Sanisub ZPK 40 A	Sanisub ZPK 40 AV	Sanisub S ZPK 30 A	Sanisub S ZPK 40 A
Type of activation	Float	Float	Compact float	Float	Float
Material					
Shaft	Stainless steel	Stainless steel	Stainless steel	Stainless steel	Stainless steel
Pump housing	PP GF	PP GF	PP GF	PP GF	PP GF
Seal	Carbon/Ceramic/ NBR	Carbon/Ceramic/ NBR	Carbon/Ceramic/ NBR	Viton	Viton
Motor housing	Stainless steel	Stainless steel	Stainless steel	Stainless steel	Stainless steel
Impeller	PA 6 GF	PA 6 GF	PA 6 GF	PA 6 GF	PA 6 GF
Electrical features					
Voltage (V)	230	230	230	230	230
Frequency (Hz)	50-60	50-60	50-60	50-60	50-60
Power consumption P1 (W)	300	850	850	300	850
Power output P2 (W)	130	430	430	130	430
Revolution per minute (RPM)	2800	2800	2800	2800	2800
Electrical class	I	I	I	I	I
Submerged	S1	S1	S1	S1	S1
Immersion depth (m)	5	5	5	5	5
Power cable: Length (m)	10	10	10	10	10
Hydraulics					
Max. Head (m)	7.5	10	10	7.5	10
Max. flow rate (m^3/h)	7	10	10	7	10
Discharge diameter (inch)	1	1¼	1¼	1	1¼
Particle size (mm)	10	30	30	10	30
Max. temperature of the pumped liquid (5 min)	90 °C	90 °C	90 °C	90 °C	90 °C
Type of impeller	Multi-channel	Multi-channel	Multi-channel	Multi-channel	Multi-channel
Identification and logistics					
Gross weight (kg)	4.5	7	7	4.5	6.5
Barcode	3308815081434	3308815081441	3308815085937	3308815083209	3308815083216
Product code	**22046**	**22047**	**31008**	**22048**	**22049**

Sanisub Steel 50A

Sanisub Steel is a submersible pump designed for the removal of lightly contaminated water: ponds, tanks and flooded cellars. Sanisub Steel is a stainless steel pump with optimised cooling. This pump can lift water up to 7.5 m with a particle size of 10 mm and a maximum temperature of 75°C. It is available as an emergency kit including a basket with a fixing kit, a 15 m discharge hose and quick couplings.





7.5 m

2-year warranty

See page 9

PERFORMANCE

- Max. Head: 7.5 m
- Max. flow rate: 9 m³/h

PACKAGING

Sanisub Steel 50A, power cable (10 m)

PRODUCT BENEFITS

- 10 mm particle size
- 7.5 m pumping height
- Optimised cooling
- Automatic activation by float
- Also available with emergency kit (22512)

CURVE

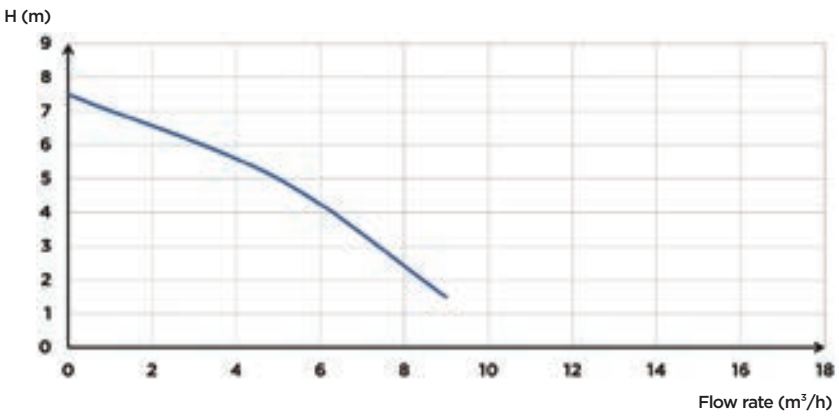

DIMENSIONS

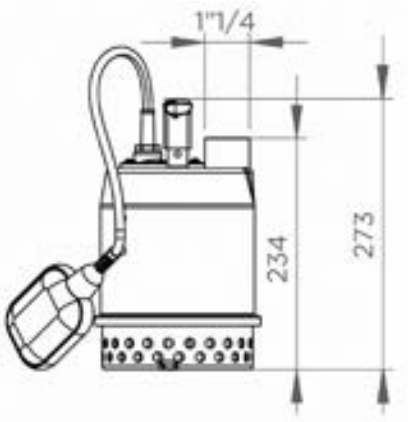

Dimensions (mm)

	Sanisub Steel 50A
Type of activation	Float
Material	
Shaft	Stainless steel
Pump housing	EN-GJL-200
Seal	Carbon/Ceramic
Motor housing	Stainless steel
Impeller	PA 6 GF
Electrical features	
Voltage (V)	230
Frequency (Hz)	50-60
Power consumption P1 (W)	450
Power output P2 (W)	203
Revolution per minute (RPM)	2800
Electrical class	I
Motor insulation class	F
Submerged	S1
Immersion depth (m)	5
Electrical features: Length (m)	10
Hydraulics	
Max. Head (m)	7.5
Max. flow rate (m^3/h)	9
Discharge diameter (inch)	1¼
Particle size (mm)	10
Max. temperature of the pumped liquid (5 min)	70°C
Type of impeller	Multi-channel
Identification and logistics	
Gross weight (kg)	6.5
Barcode	33088150883162
Product code	**22488**

Sanisub Steel and Emergency Kit

The Sanisub steel is a submersible pump designed for the removal of lightly contaminated water: ponds, tanks and flooded cellars. Sanisub Steel is a stainless steel pump with optimised cooling. This pump can lift water up to 7.5 m with a particle size of 10 mm and a maximum temperature of 75°C. The emergency kit includes a basket with fixing kit, a 15 m discharge hose and quick couplings.





7.5 m

2-year warranty

See page 9

PERFORMANCE

- Max. Head: 7.5 m
- Max. flow rate: 9 m³/h

PACKAGING

Sanisub Steel pump, basket with fixing kit, 15 m discharge hose with quick couplings, hose support, power cable (10 m)

PRODUCT BENEFITS

- 10 mm particle size
- 7.5 m pumping height
- Optimised cooling
- Automatic activation by float
- Sanisub steel pump available without emergency kit (Code 22488)
- Easy to store: basket comes with a cover
- 15m discharge hose with quick coupling and hose support included

CURVE

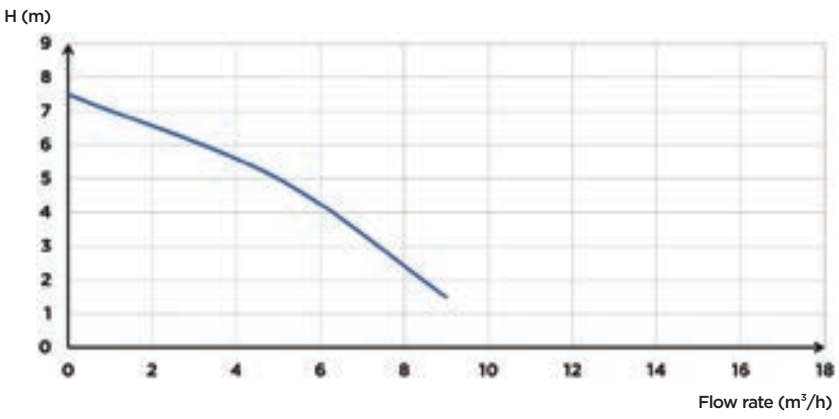

DIMENSIONS

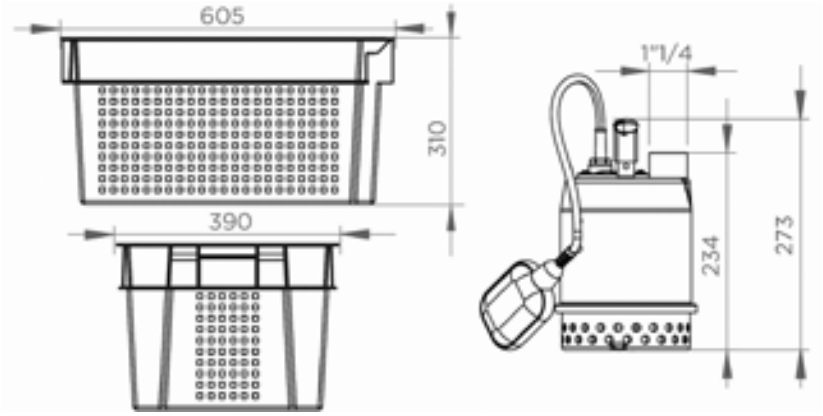

Dimensions (mm)

	Sanisub Steel Kit
Type of activation	Float
Material	
Shaft	Stainless steel
Pump housing	EN-GJL-200
Seal	Carbon/Ceramic
Motor housing	Stainless steel
Impeller	PA 6 GF
Electrical features	
Voltage (V)	230
Frequency (Hz)	50-60
Power consumption P1 (W)	450
Power output P2 (W)	250
Revolution per minute (RPM)	2800
Electrical class	I
Motor insulation class	F
Submerged	S1
Immersion depth (m)	5
Electrical features : Length (m)	10
Hydraulics	
Max. Head (m)	7.5
Max. flow rate (m^3/h)	9
Discharge diameter (inch)	1¼
Particle size (mm)	10
Max. temperature of the pumped liquid (5 min)	70°C
Type of impeller	Multi-channel
Identification and logistics	
Gross weight (kg)	12
Barcode	3308815083964
Product code	**22512**

Sanisub 800 Rainkit

The Sanisub 800 Rainkit is a pumping kit for pumping flood water from living rooms or cellars. This pump kit can raise water up to 11 m with a particle size of 20 mm without the drain by placing the pump on the feet provided. This rainwater lifting kit consists of two pumps to be mounted on a stainless steel frame. The pumps work alternately. The pumps are pre-assembled.





11 m

2-year warranty

See page 9

PERFORMANCE

- Max. Head: 11 m
- Max. flow rate: 15 m³/h

PACKAGING

Control box, PVC pipe, stainless steel frame, 2 Sanisub 800 pumps, alarm float

PRODUCT BENEFITS

- Particle size of 20 mm without the drain by placing the pump on the feet provided
- Lift height of 11 m
- Two Sanisub 800 pumps
- Alternating operation of the pumps
- Non-return valves integrated into the pumps
- Stainless steel frame with overflow filling
- Pre-assembled pipes

CURVE

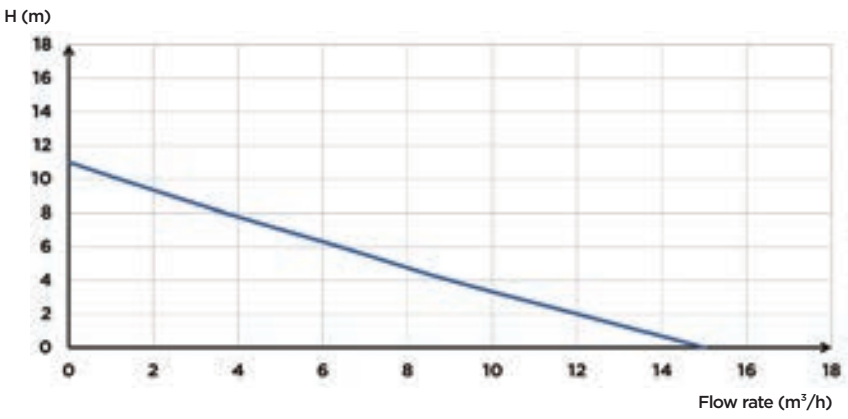

DIMENSIONS

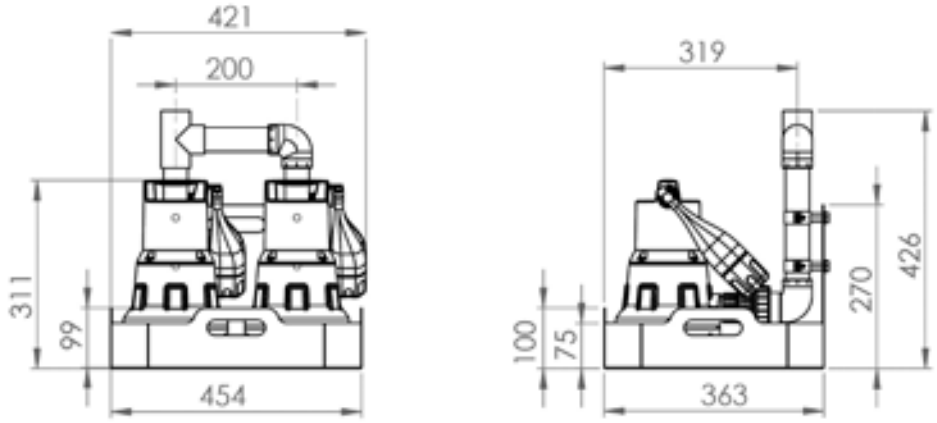

Dimensions (mm)

	Sanisub 800 Rainkit
Type of activation	Float
Material	
Shaft	Stainless steel
Pump housing	PP GF
Seal	NBR
Motor housing	Stainless steel
Impeller	PA 6 GF
Electrical features	
Voltage (V)	230
Frequency (Hz)	50-60
Power consumption P1 (W)	800
Power output P2 (W)	600
Revolution per minute (RPM)	2800
Electrical class	I
Submerged	S1
Immersion depth (m)	7
Power cable: Length (m)	10
Hydraulics	
Max. Head (m)	11
Max. flow rate (m^3/h)	15
Discharge diameter (inch)	1¼
ON Level /OFF level (mm)	250/130
Particle size (mm)	20
Max. temperature of the pumped liquid (5 min)	70°C
Type of impeller	multi-channel
Identification and logistics	
Gross weight (kg)	27.5
Barcode	3308815096568
Product code	**33106**

Sanipump GR/VX

The Sanipump grinder and vortex are two pumps designed for the removal of domestic waste water from toilets, bathrooms, kitchens or utility rooms. The Sanipump grinder Pro X K2 grinding systems allows the removal of water through a small diameter pipe. Sanipump VX comes with a vortex impeller KX V6 allowing a free passage of 50 mm. The Sanipump uses a float activation system.





17 m

PERFORMANCE

- Max. Head: 17 m
- Max. flow rate: 33 m³/h

DEPENDING ON MODEL

PACKAGING

Sanipump with float activation

PRODUCT BENEFITS

- Autonomous operation
- Pro X K2 cutting technology for the GR version
- KX V6 Vortex technology for the VX version
- Float switch activation system
- Max. waste water temperature: 70°C

CURVE

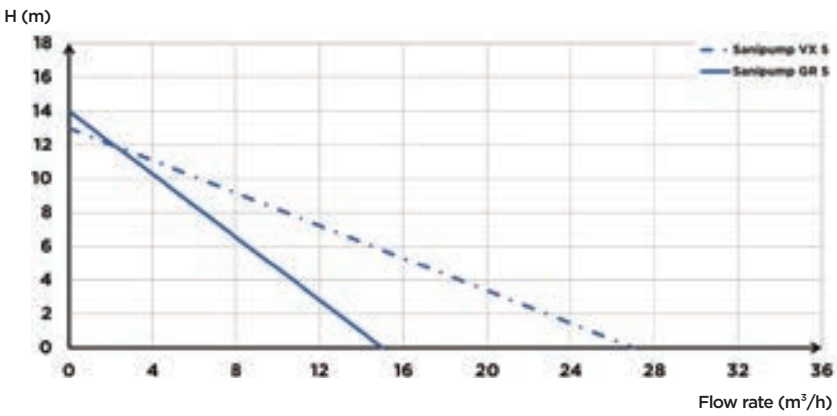

DIMENSIONS

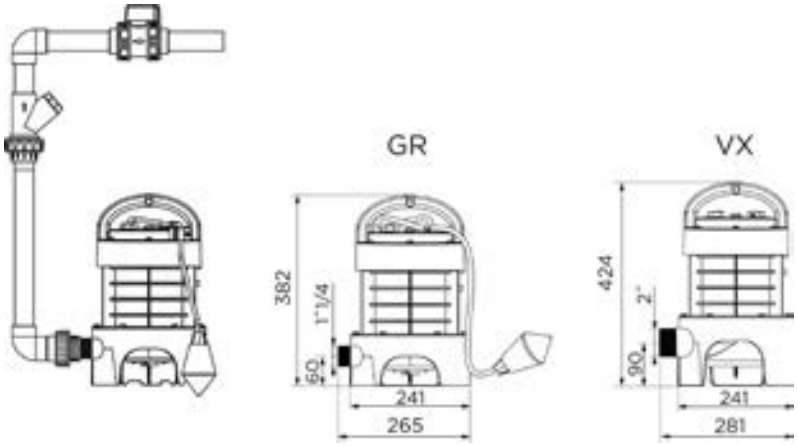

Dimensions (mm)

	Sanipump GR S	Sanipump VX S	Sanipump VX T (Sanifos 610)	Sanipump VX T (Sanifos 1300)
Type of activation	Float	Float	Float	Float
Material				
Shaft	Stainless steel	Stainless steel	Stainless steel	Stainless steel
Pump housing	PA 6 GF	PA 6 GF	PA 6 GF	EN-GJL-200
Seal	NBR	NBR	NBR	NBR
Foot	PA 6 GF	PA 6 GF	PA 12 GF	EN-GJL-200
Motor housing	PA 6 GF	PA 6 GF	PA 6 GF	PA 6 GF
Impeller	PA 6 GF	PA 6 GF	PPO GF	PPO GF
Electrical features				
Voltage (V)	230	230	400	400
Frequency (Hz)	50-60	50-60	50-60	50-60
Power consumption P1 (W)	1500	1500	2800	2800
Power output P2 (W)	1050	1050	2240	2240
Revolution per minute (RPM)	2800	2800	2900	2900
Electrical class	I	I	I	I
Motor insulation class	F	F	F	F
Mode of operation	S3 30%	S3 15%	?	?
Immersion depth (m)	5	5	5	5
Power cable: Length (m)	10	10	2,5	2,5
Electrical features: Type of cable, Section (mm^2)	H07 RN-F 3G, 1.5	H07 RN-F 3G, 1.5	H07 RN-F 5G, 2.5	H07 RN-F 5G, 2.5
Hydraulics				
Max. Head (m)	14	13	17	17
Max. flow rate (m^3/h)	15	27	29	33
Discharge diameter (inch)	1¼	2	-	-
ON Level /OFF level (mm)	360/160	360/160	-	-
Max. temperature of the pumped liquid (5 min)	70°C	70°C	70°C	70°C
Type of impeller	Pro X K2 grinder	Vortex	Vortex	Vortex
Identification and logistics				
Gross weight (kg)	14	15	See Sanifos 610 page 113	See Sanifos 1300 page 115
Barcode	3308815074610	3308815076201	See Sanifos 610 page 113	See Sanifos 1300 page 115
Product code	**30014**	**30015**	See Sanifos 610 page 113	See Sanifos 1300 page 115

Sanipump ZPG 71

The Sanipump ZPG 71 is a cast iron submersible pump for pumping grey water and rainwater with a maximum lift height of 31 m and a free passage of 40 mm. Sanipump ZPG 71 can be installed in a manhole or pit. All accessories are available for installation on the floor or on a base. Sanipump ZPG 71 is compatible with Sanifos 1600/2100/3100 and is available in 4 versions: 1 single-phase and 3 three-phase.

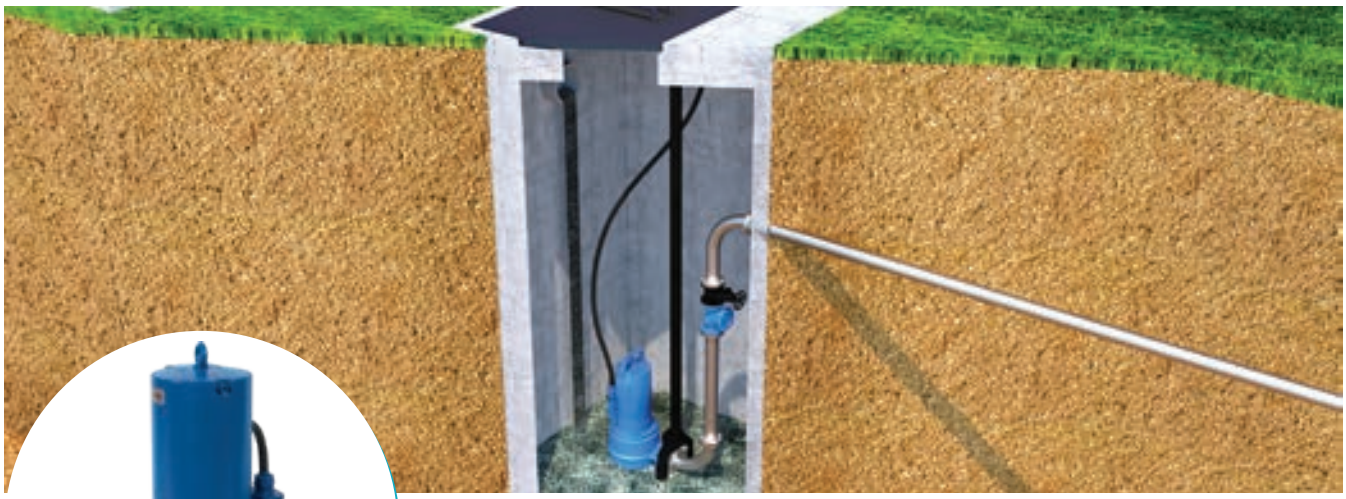



31 m

PERFORMANCE

- Max. Head: 31 m
- Max. flow rate: 43 m³/h

DEPENDING ON MODEL

PACKAGING

Sanipump ZPG pump, stand

PRODUCT BENEFITS

- Rainwater lifting
- S1 mode, if motor fully submerged
- Integrated stand
- Bi-channel impeller
- 40 mm free passage
- Available in 4 versions
- Compatible with Sanifos 1600/2100/3100



Two-channel impeller

CURVE

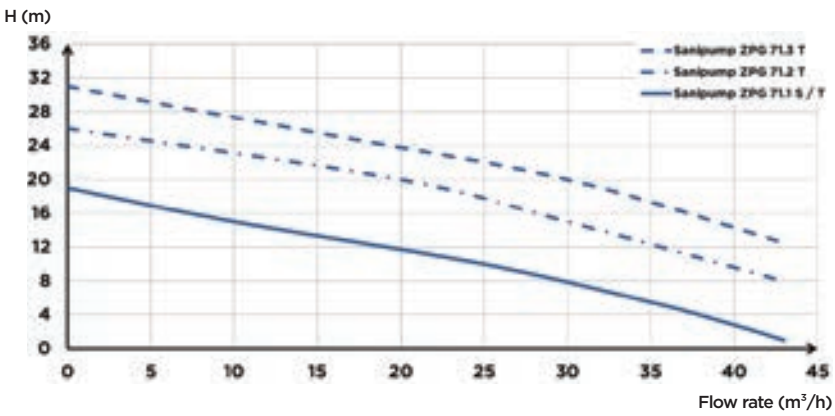

DIMENSIONS

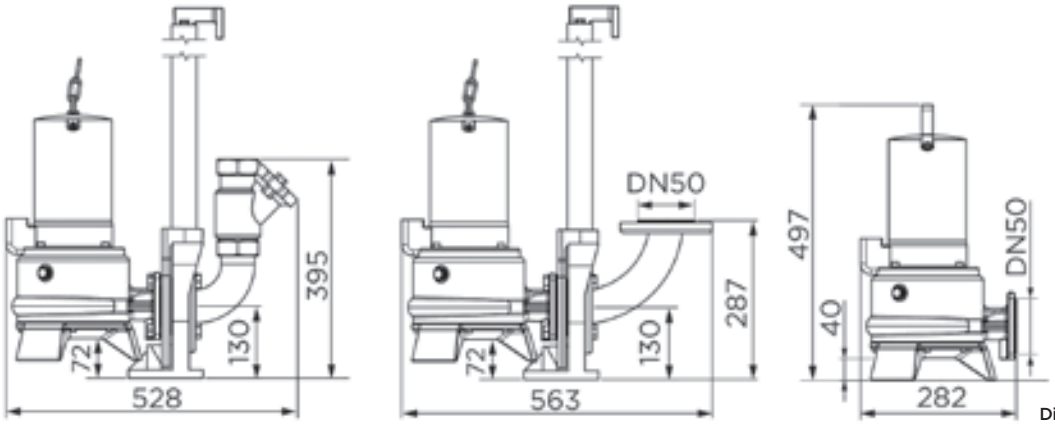

Dimensions (mm)

	Sanipump ZPG 71.1 S	Sanipump ZPG 71.1 T	Sanipump ZPG 71.2 T	Sanipump ZPG 71.3 T
Material				
Shaft	Stainless steel	Stainless steel	Stainless steel	Stainless steel
Pump housing	EN-GJL-200	EN-GJL-200	EN-GJL-200	EN-GJL-200
Sealing on motor side	SIC/SIC/NBR	SIC/SIC/NBR	SIC/SIC/NBR	SIC/SIC/NBR
Fluid sealing	SIC/SIC/NBR	SIC/SIC/NBR	SIC/SIC/NBR	SIC/SIC/NBR
Foot	EN-GJL-200	EN-GJL-200	EN-GJL-200	EN-GJL-200
Motor housing	EN-GJL-200	EN-GJL-200	EN-GJL-200	EN-GJL-200
Impeller	EN-GJL-200	EN-GJL-200	EN-GJL-200	EN-GJL-200
Electrical features				
Voltage (V)	230	400	400	400
Frequency (Hz)	50-60	50-60	50-60	50-60
Power consumption P1 (W)	2200	2100	3900	3900
Power output P2 (W)	1600	1700	3200	3200
Revolution per minute (RPM)	2800	2800	2800	2800
Electrical class	I	I	I	I
Motor insulation class	F	F	F	F
Submerged	S1	S1	S1	S1
Mode of operation	S3 40%	S3 40%	S3 40%	S3 40%
Immersion depth (m)	5	5	5	5
Electrical features: Length (m)	10	10	10	10
Electrical features: Type of cable, Section (mm^2)	S1BN8-F, 1.5	S1BN8-F, 1.5	S1BN8-F, 1.5	S1BN8-F, 1.5
Hydraulics				
Max. Head (m)	19	19	26	31
Max. flow rate (m^3/h)	43	43	43	43
Discharge diameter DN (mm)	50	50	50	50
Free passage (mm)	40	40	40	40
Max. temperature of the pumped liquid (5 min)	70°C	70°C	70°C	70°C
Type of impeller	Two-channel	Two-channel	Two-channel	Two-channel
Identification and logistics				
Gross weight (kg)	38	40	44	46
Barcode	3308815081533	3308815081540	3308815081557	3308815081564
Product code	**21857**	**21858**	**21859**	**21860**

KEY: S = Single phase, T = Three phase.

ZFS/ZPG 71 COUPLING SYSTEM



ZFS/ZPG 71 coupling system

Barcode: 3308815081984

Product code: 12029

Sanipump ZFS 71

The Sanipump ZFS 71 is a cast iron submersible pump for lifting waste water (collective sanitary facilities) up to a height of 39 m. Sanipump ZFS 71 is equipped with a grinder impeller. It is available in single-phase and three-phase versions and is compatible with Sanifos 1600/2100/3100.





39 m

PERFORMANCE

- Max. Head: 39 m
- Max. flow rate: 17 m³/h

DEPENDING ON MODEL

PACKAGING

Sanipump ZFS pump

PRODUCT BENEFITS

- Mode S1 (if motor fully immersed)
- ATEX pump
- 5 versions, single and three-phase
- Discharge in DN50
- Double mechanical seal
- Compatible with Sanifos 1600/2100/3100



Grinder Pro X K3

CURVE

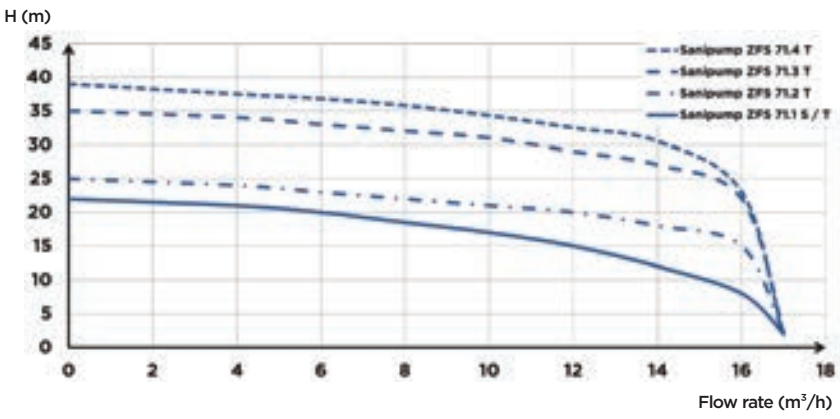

DIMENSIONS

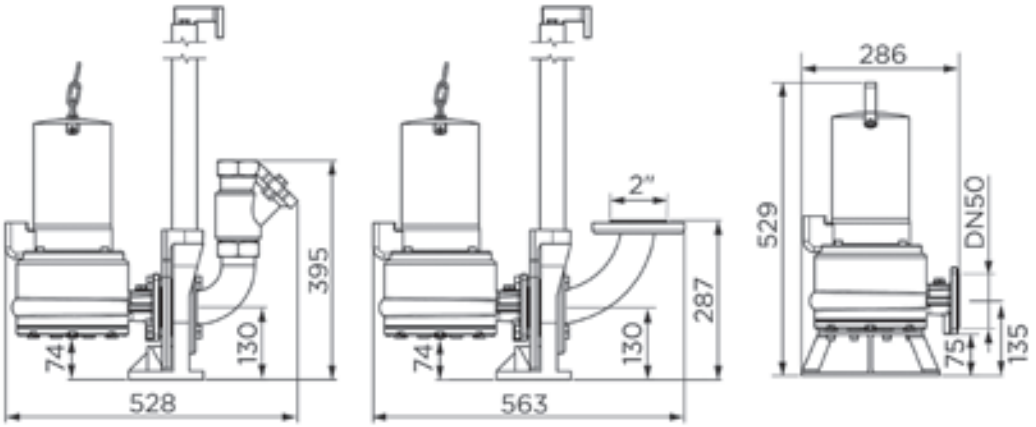

Dimensions (mm)

	Sanipump ZFS 71.1 S	Sanipump ZFS 71.1 T	Sanipump ZFS 71.2T	Sanipump ZFS 71.3T	Sanipump ZFS 71.4T
Material					
Shaft	Stainless steel	Stainless steel	Stainless steel	Stainless steel	Stainless steel
Pump housing	EN-GJL-200	EN-GJL-200	EN-GJL-200	EN-GJL-200	EN-GJL-200
Sealing on motor side	SIC/SIC/NBR	SIC/SIC/NBR	SIC/SIC/NBR	SIC/SIC/NBR	SIC/SIC/NBR
Fluid sealing	SIC/SIC/NBR	SIC/SIC/NBR	SIC/SIC/NBR	SIC/SIC/NBR	SIC/SIC/NBR
Foot	EN-GJL-200	EN-GJL-200	EN-GJL-200	EN-GJL-200	EN-GJL-200
Motor housing	EN-GJL-200	EN-GJL-200	EN-GJL-200	EN-GJL-200	EN-GJL-200
Impeller	EN-GJL-200	EN-GJL-200	EN-GJL-200	EN-GJL-200	EN-GJL-200
Electrical features					
Voltage (V)	230	400	400	400	400
Frequency (Hz)	50-60	50-60	50-60	50-60	50-60
Power consumption P1 (W)	2200	2100	2100	3900	3900
Power output P2 (W)	1600	1700	1700	3200	3200
Revolution per minute (RPM)	2800	2800	2800	2800	2800
Electrical class	I	I	I	I	I
Motor insulation class	F	F	F	F	F
ATEX	yes	yes	yes	yes	yes
Submerged	S1	S1	S1	S1	S1
Mode of operation	S3 40%	S3 40%	S3 40%	S3 40%	S3 40%
Immersion depth (m)	5	5	5	5	5
Electrical features: Length (m)	10	10	10	10	10
Electrical features: Type of cable, Section (mm^2)	S1BN8-F, 1.5	S1BN8-F, 1.5	S1BN8-F, 1.5	S1BN8-F, 1.5	S1BN8-F, 1.5
Hydraulics					
Max. Head (m)	22	22	25	35	39
Max. flow rate (m^3/h)	17	17	17	17	17
Discharge diameter DN (mm)	50	50	50	50	50
Max. temperature of the pumped liquid (5 min)	70°C	70°C	70°C	70°C	70°C
Type of impeller	Pro X K3 Grinder	Pro X K3 Grinder	Pro X K3 Grinder	Pro X K3 Grinder	Pro X K3 Grinder
Identification and logistics					
Gross weight (kg)	38	38	38	42	42
Barcode	3308815081571	3308815081588	3308815081595	3308815081601	3308815081618
Product code	**21410**	**21411**	**21412**	**21413**	**21332**

ZFS/ZPG 71 COUPLING SYSTEM



ZFS/ZPG 71 coupling system
Barcode: 3308815081984
Product code: 12029



ZFS floor installation kit
Barcode: 3308815081977
Product code: 12019

Sanipump SLD 700

The Sanipump SLD is a pump designed for high-flowing rainwater up to 48 m³/h. It is available in single-phase or three-phase with a free passage of 50 mm due to its high-performance two-channel impeller. A version with a base for installation in a manhole as well as drainage kits and accessories are available. When 2 pumps are installed, it is recommended that a ZPS control box and Aqua XL floats is installed.





14 m

PERFORMANCE

- Max. Head: 14 m
- Max. flow rate: 48 m³/h

DEPENDING ON MODEL

PACKAGING

Sanipump SLD 700 pump

PRODUCT BENEFITS

- High flow rates: up to 48 m³/hour
- Mode S1 (if motor fully immersed)
- Suitable for rainwater discharge
- Two-channel impeller with 50 mm free passage
- Single-phase or three-phase versions
- Base stand or coupling system



Two-channel impeller

CURVE

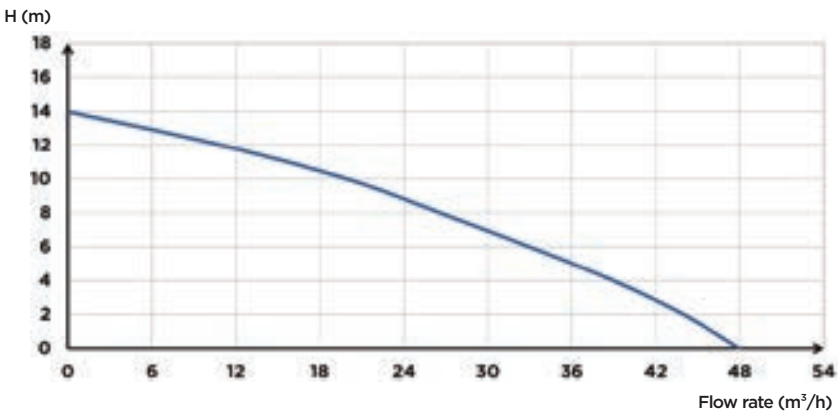

DIMENSIONS

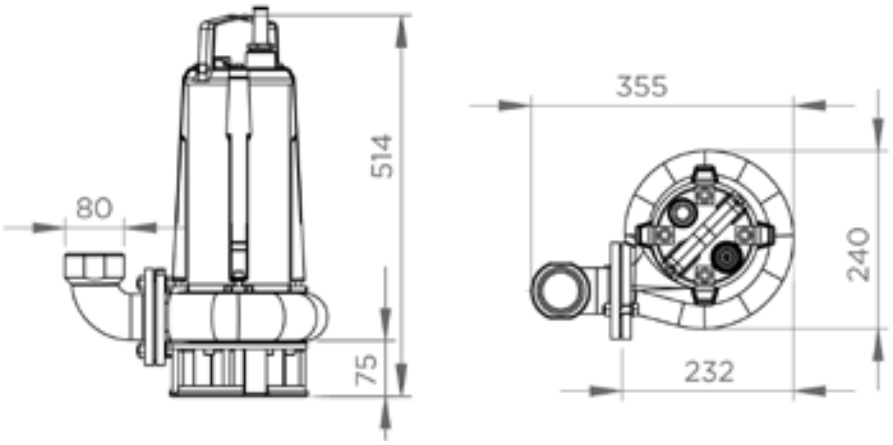

Dimensions (mm)

	Sanipump SLD 700 S	Sanipump SLD 700 SA	Sanipump SLD 700 T
Type of activation		Float	
Material			
Shaft	Stainless steel	Stainless steel	Stainless steel
Pump housing	EN-GJL-200	EN-GJL-200	EN-GJL-200
Seal	Carbon/ceramic/NBR	Carbon/ceramic/NBR	Carbon/ceramic/NBR
Foot	EN-GJL-200	EN-GJL-200	EN-GJL-200
Motor housing	EN-GJL-200	EN-GJL-200	EN-GJL-200
Impeller	EN-GJL-200	EN-GJL-200	EN-GJL-200
Electrical features			
Voltage (V)	230	230	400
Frequency (Hz)	50-60	50-60	50-60
Power consumption P1 (W)	2000	2000	2000
Power output P2 (W)	1100	1100	1100
Revolution per minute (RPM)	2800	2800	2800
Electrical class	I	I	I
Motor insulation class	F	F	F
Submerged	S1	S1	S1
Immersion depth (m)	20	20	20
Electrical features: Length (m)	10	10	10
Hydraulics			
Max. Head (m)	14	14	14
Max. flow rate (m^3/h)	48	48	48
Discharge diameter DN (mm)	50	50	50
Discharge diameter G (inch)	2	2	2
Particle size (mm)	50	50	50
Max. temperature of the pumped liquid (5 min)	70°C	70°C	70°C
Type of impeller	Two-channel	Two-channel	Two-channel
Identification and logistics			
Gross weight (kg)	32.5	32.8	31
Barcode	3308815084015	3308815083988	3308815084060
Product code	**31009**	**31010**	**31011**

Sanipump VX 50

The Sanipump VX 50 is a cast iron submersible pump which can remove black water and rainwater up to a maximum height of 16 m and has a discharge diameter of DN 50. Sanipump VX 50 can be installed in a manhole or a pit and is available as a portable or stationary version. Sanipump VX 50 is compatible with Sanifos 1600/2100/3100 and is available in 12 versions: 8 single-phase (including 4 automatic) and 4 three-phase.





16 m

2-year warranty

See page 9

PERFORMANCE

- Max. Head: 16 m
- Max. flow rate: 29 m³/h

DEPENDING ON MODEL

PACKAGING

Sanipump VX 50

PRODUCT BENEFITS

- Vortex impeller
- DN 50 outlet
- 12 versions, single-phase and three-phase
- S1 mode (if motor fully submerged)
- Available in portable or stationary version
- Compatible with Sanifos 1600/2100/3100



Vortex impeller

CURVE

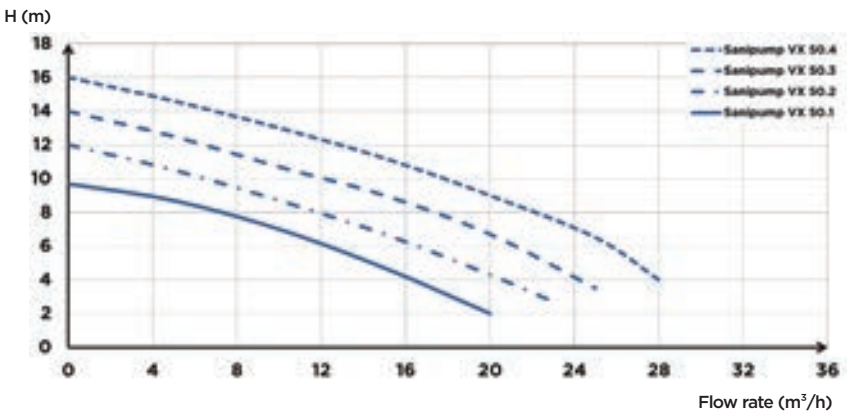

DIMENSIONS

Installation with the portable kit

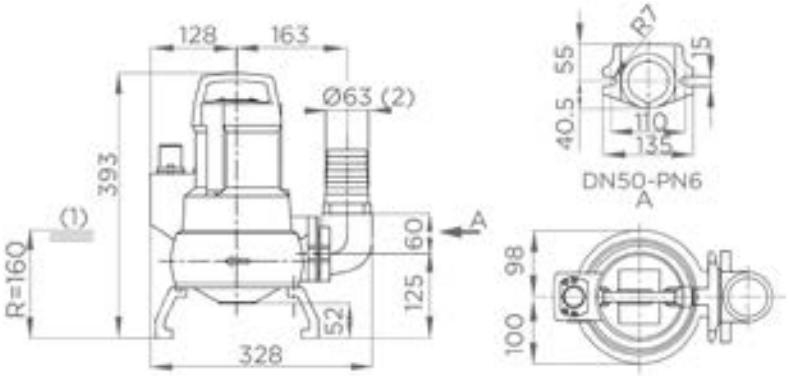

(1) Lowest stopping point (2) Diameter of inner flexible hose: 63 mm

Dimensions (mm)

Permanent installation with guide rail, base and elbow DN 50/50

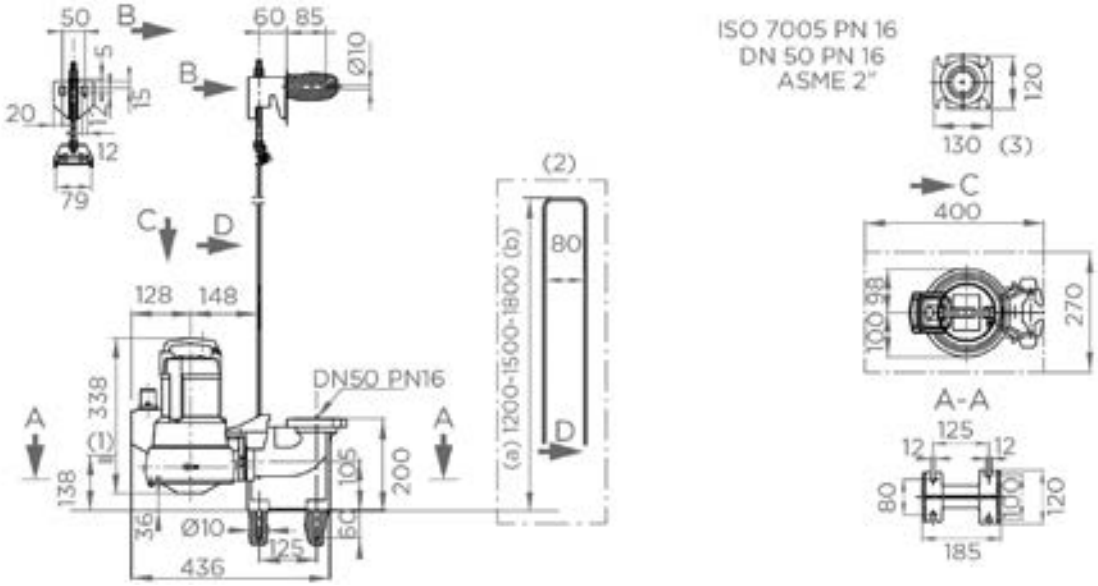

(1) Lowest stopping point (2) Stirrup (3) Elbow flange (a) Minimum (b) Maximum

Dimensions (mm)

Permanent installation with guide rail, base and elbow DN 50/50

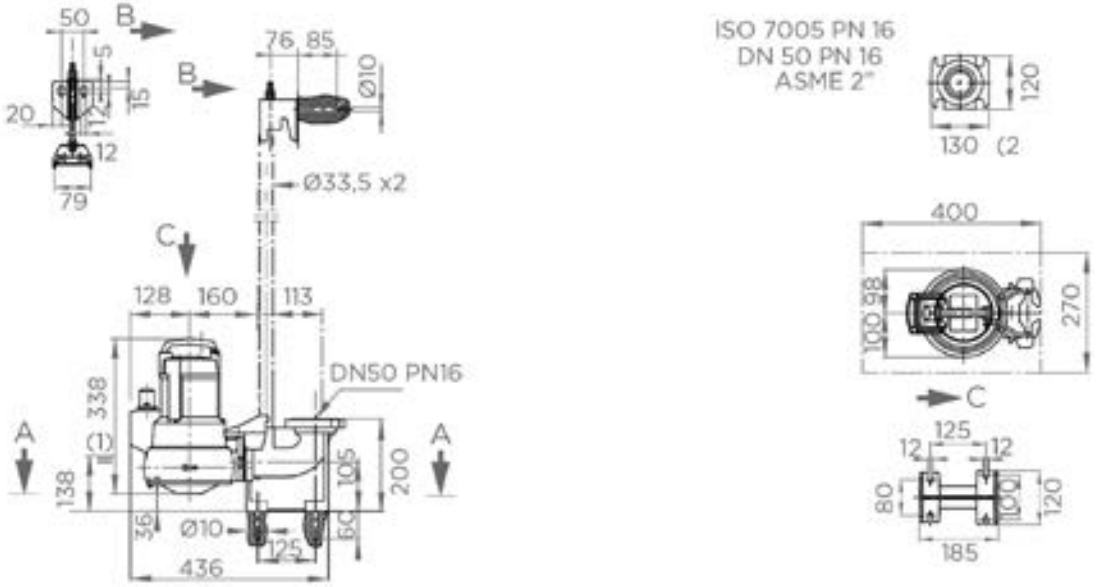

(1) Lowest stopping point (2) Elbow flange

Dimensions (mm)

	Sanipump VX 50.1 S	Sanipump VX 50.1 SA	Sanipump VX 50.1 T	Sanipump VX 50.2 S	Sanipump VX 50.2 SA	Sanipump VX 50.2 T
Type of activation	-	Float	-	-	Float	-
Material						
Shaft	Stainless steel	Stainless steel	Stainless steel	Stainless steel	Stainless steel	Stainless steel
Pump housing	EN-GJL-250	EN-GJL-250	EN-GJL-250	EN-GJL-250	EN-GJL-250	EN-GJL-250
Motor seal	Shaft seal ring	Shaft seal ring	Shaft seal ring	Shaft seal ring	Shaft seal ring	Shaft seal ring
Pump seal	SIC/AI203	SIC/AI203	SIC/AI203	SIC/AI203	SIC/AI203	SIC/AI203
Motor housing	EN-GJL-250	EN-GJL-250	EN-GJL-250	EN-GJL-250	EN-GJL-250	EN-GJL-250
Impeller	EN-GJL-250	EN-GJL-250	EN-GJL-250	EN-GJL-250	EN-GJL-250	EN-GJL-250
Electrical features						
Voltage (V)	230	230	400	230	230	400
Frequency (Hz)	50	50	50	50	50	50
Power consumption P1 (W)	1000	1000	900	1250	1250	1100
Power output P2 (W)	550	550	550	750	750	750
Revolution per minute (RPM)	2800	2800	2800	2800	2800	2800
Electrical class	I	I	I	I	I	I
Motor insulation class	F	F	F	F	F	F
Duty cycle (submerged)	S1	S1	S1	S1	S1	S1
Max. number of starts per hour	15	15	15	15	15	15
Immersion depth (m)	10	10	10	10	10	10
Power cable: Length (m)	10	10	10	10	10	10
Power cable: Type of cable, Section (mm^2)	H07 RN8-F, 3x1	H07 RN8-F, 3x1	H07 RN8-F, 4x1	H07 RN8-F, 3x1	H07 RN8-F, 3x1	H07 RN8-F, 4x1
Hydraulics						
Max. Head (m)	9	9	9	12	12	12
Max. Flow rate (m^3/h)	20	20	20	23	23	23
Discharge diameter DN	50	50	50	50	50	50
Particle size (mm)	45	45	45	45	45	45
Max. Temperature of the pumped liquid (5 min max)	40 °C	40 °C	40 °C	40 °C	40 °C	40 °C
Type of impeller	Vortex	Vortex	Vortex	Vortex	Vortex	Vortex
Identification and logistics						
Gross weight (kg)	22	23	22	23	23	23
Barcode	3308815090139	3308815090146	3308815090153	3308815090160	3308815090177	3308815090184
Product code	**31012**	**31013**	**31014**	**31015**	**31016**	**31017**

TRANSPORTATION KIT FOR THE SANIPUMP VX 50



Transportation Kit Sanipump VX 50

3308815090320
Product code 21500
Transportation Kit

SANIPUMP VX 50 BASE GUIDE BAR



Base for Sanipump VX 50 guide bar (Bar not supplied)

3308815090368
Product code 21501
Base for Single bar (delivered without bar)

	Sanipump VX 50.3 S	Sanipump VX 50.3 SA	Sanipump VX 50.3 T	Sanipump VX 50.4 S	Sanipump VX 50.4 SA	Sanipump VX 50.4 T
Type of activation	-	Float	-	-	Float	-
Material						
Shaft	Stainless steel	Stainless steel	Stainless steel	Stainless steel	Stainless steel	Stainless steel
Pump housing	EN-GJL-250	EN-GJL-250	EN-GJL-250	EN-GJL-250	EN-GJL-250	EN-GJL-250
Motor seal	Shaft seal ring	Shaft seal ring	Shaft seal ring	Shaft seal ring	Shaft seal ring	Shaft seal ring
Fluid sealing	SIC/Al203	SIC/Al203	SIC/Al203	SIC/Al203	SIC/Al203	SIC/Al203
Motor housing	EN-GJL-250	EN-GJL-250	EN-GJL-250	EN-GJL-250	EN-GJL-250	EN-GJL-250
Impeller	EN-GJL-250	EN-GJL-250	EN-GJL-250	EN-GJL-250	EN-GJL-250	EN-GJL-250
Electrical features						
Voltage (V)	230	230	400	230	230	400
Frequency (Hz)	50	50	50	50	50	50
Power consumption P1 (W)	1800	1800	1500	1800	1800	2050
Power output P2 (W)	1100	1100	1100	1100	1100	1500
Revolution per minute (RPM)	2800	2800	2800	2800	2800	2800
Electrical class	I	I	I	I	I	I
Motor insulation class	F	F	F	F	F	F
Duty cycle (submerged)	S1	S1	S1	S1	S1	S1
Max. number of starts per hour	15	15	15	15	15	15
Immersion depth (m)	10	10	10	10	10	10
Power cable: Length (m)	10	10	10	10	10	10
Power cable: Type of cable, Section (mm^2)	H07 RN8-F, 3x1	H07 RN8-F, 3x1	H07 RN8-F, 4x1	H07 RN8-F, 3x1	H07 RN8-F, 3x1	H07 RN8-F, 4x1
Hydraulics						
Max. Head (m)	14	14	14	16	16	16
Max. Flow rate (m^3/h)	25.5	25.5	25.5	29	29	29
Discharge diameter DN (mm)	50	50	50	50	50	50
Particle size (mm)	43	43	43	41	41	41
Max. Temperature of the pumped liquid (5 min max)	40 °C	40 °C	40 °C	40 °C	40 °C	40 °C
Type of impeller	Vortex	Vortex	Vortex	Vortex	Vortex	Vortex
Identification and logistics						
Gross weight (kg)	23	23	22	23	23	23
Barcode	3308815090191	3308815090207	3308815090214	3308815090221	3308815090238	3308815090245
Product code	**31018**	**31019**	**31020**	**31021**	**31022**	**31023**

SANIPUMP VX 50 COUPLING SYSTEM



Base for Sanipump VX 50 and guide bracket 120 provided for pit of maximum depth 1.5 m

3308815090337
Product code 21502
Stirrup guide base 120

Base for Sanipump VX 50 and guide bracket 150 provided for pit of maximum depth 1.8 m

3308815090344
Product code 21503
Coupling system 150

Base for Sanipump VX 50 and guide bracket 180 provided for pit of maximum depth 2.1 m

3308815090351
Product code 21504
Coupling system 180

Sanipump VX 65 and VX 80

The Sanipump VX 65 and VX 80 are cast iron submersible pumps designed for the removal of black water and rainwater up to a maximum height of 35 m. They are equipped with a vortex impeller with a diameter of 120 to 190 mm, depending on the model, and an outlet in DN 65 or DN 80. Stationary installation on a DN 65, 80 or 100 is possible with the addition of a base. Sanipump VX 65/80 can be installed in a manhole or a pit.

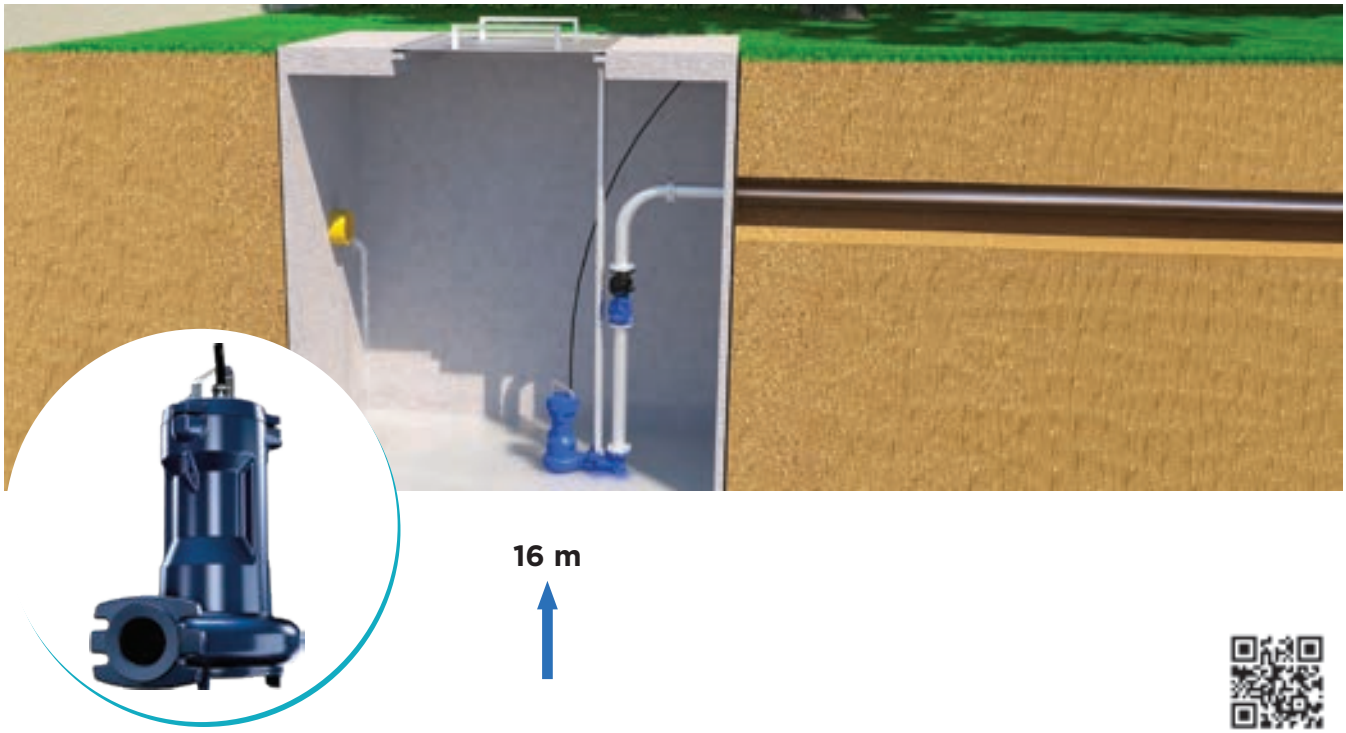

16 m

PERFORMANCE

- Max. Head: 35 m
- Max. flow rate: 110 m^3/h

DEPENDING ON MODEL

PACKAGING

Sanipump VX 65 or Sanipump VX 80

PRODUCT BENEFITS

- Vortex impeller
- DN 65 / DN 80 outlet
- 7 versions, single-phase and three-phase
- S1 mode (if motor fully submerged)
- Available in transportable or stationary version
- Compatible with Sanifos 1600/2100/3100



Vortex impeller

CURVE

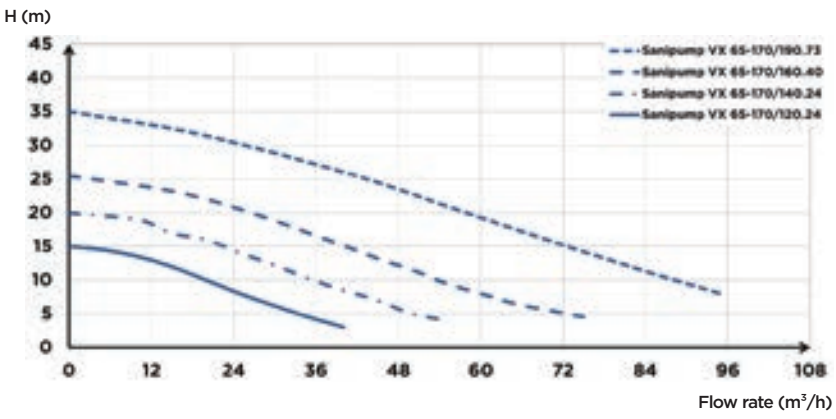

DIMENSIONS

Sanipump VX 65 – Permanent installation with 2 guide rails

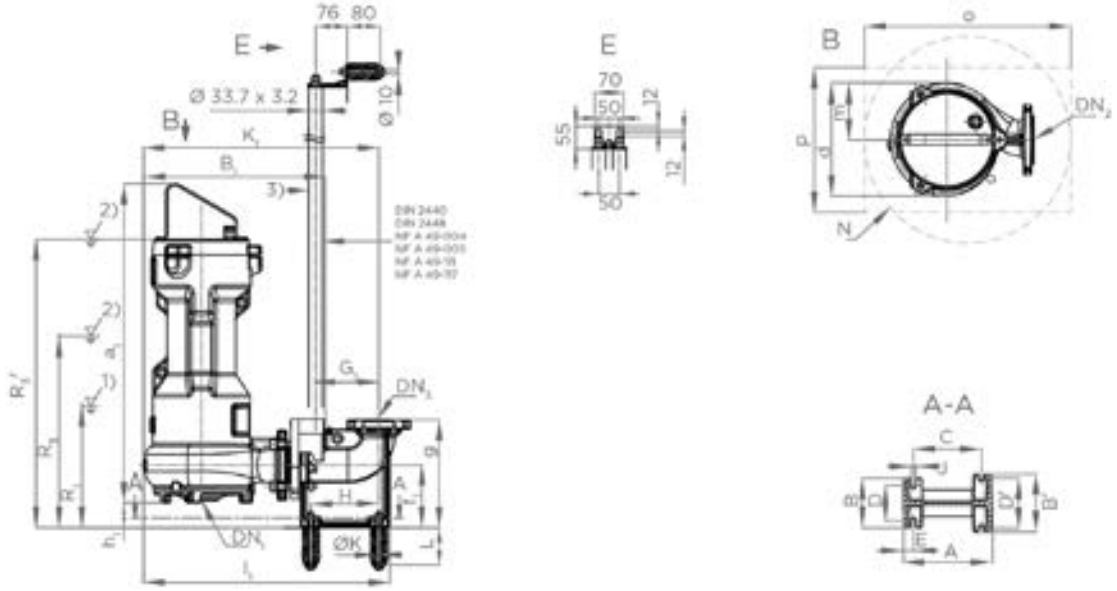

(1) Lowest stop level in automatic operation (2) Minimum submergence in continuous service (3) Not Provided by SFA

Dimensions (mm)

Pump unit dimensions (mm)

Pump power	DN_1	DN_2	a_1	b_1	d	D_1	f_1	g	g_1	h_1	H_1	k_1	k_2	l_1	m	Z_1	R1	R3
.24 & .40	65	65	691	440	274	170	151	261	118	60	170	569	145	595	138	4	245	636
.73	65	65	763	440	274	170	151	261	118	60	170	569	145	595	138	4	357	688

Foundation block dimensions (mm)

Pump power	DN_3	A	B	B'	C	D	D'	E	G_1	H	J	ØK	L	N min.	O min.	P min.
.24 & .40 .73	65	216	120	140	165	85	120	25	153	165	12	10	90	550	550	400

Sanipump VX 80 – Permanent installation with 2 guide rails

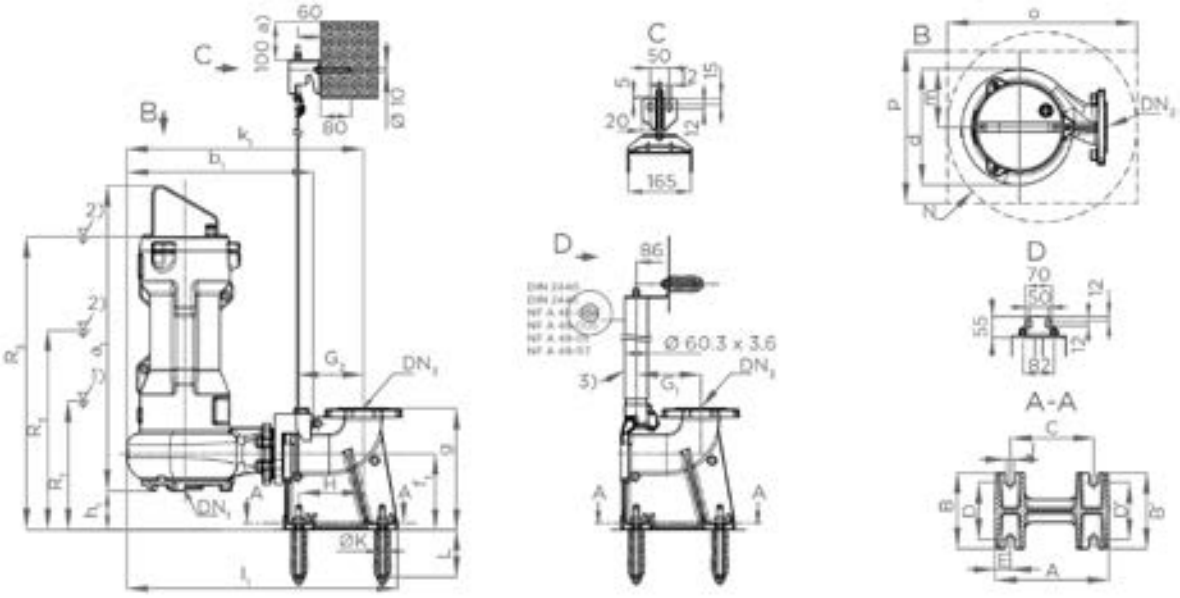

(1) Lowest stop level in automatic operation (2) Minimum submergence in continuous service (3) Not Provided by SFA

Dimensions (mm)

Pump unit dimensions (mm)

Pump power	DN_1	DN_2	a_1	b_1	d	D_1	f_1	g	g_1	h_1	H_1	k_1	k_2	l_1	m	Z_1	R1	R3
.40	80	80	701	492	305	160	200	320	132	103	200	623	160	713	154	4	298	689
.49 & .73	80	65	774	492	305	160	200	320	132	103	200	623	160	713	154	4	411	742

Foundation block dimensions (mm)

Pump power	DN_3	A	B	B'	C	D	D'	E	G_1	G_2	H	J	ØK	L	N min.	O min.	P min.
.40 .49 & .73	80	300	200	200	220	150	150	40	170	173	170	20	18	125	580	580	400

	Sanipump VX 65-170/120.24	Sanipump VX 65-170/140.24	Sanipump VX 65-170/160.40	Sanipump VX 65-170/190.73
Type of impeller	Vortex	Vortex	Vortex	Vortex
Material				
Shaft	Stainless steel	Stainless steel	Stainless steel	Stainless steel
Pump housing	EN-GJL-250	EN-GJL-250	EN-GJL-250	EN-GJL-250
Motor seal	SIC/SIC/NBR	SIC/SIC/NBR	SIC/SIC/NBR	SIC/SIC/NBR
Pump seal	Carbon/Al203	Carbon/Al203	Carbon/Al203	Carbon/Al203
Motor housing	EN-GJL-250	EN-GJL-250	EN-GJL-250	EN-GJL-250
Impeller	EN-GJL-250	EN-GJL-250	EN-GJL-250	EN-GJL-250
Electrical features				
Voltage (V)	400	400	400	400
Frequency (Hz)	50	50	50	50
Power consumption P1 (W)	2950	2950	4860	8720
Power output P2 (W)	2400	2400	4000	7300
Revolutions per minute (RPM)	2900	2900	2900	2900
Electrical class	I	I	I	I
Motor insulation class	F	F	F	F
Duty cycle (submerged)	S1	S1	S1	S1
Max. number of starts per hour	30	30	30	30
Immersion depth (m)	25	25	25	25
Power cable (m)	10	10	10	10
Power cable: type of cable, section (mm^2)	H07 RN8-F, 4x1	H07 RN8-F, 4x1	H07 RN8-F, 4x1	H07 RN8-F, 4x1
Hydraulics				
Max. Head (m)	15	20	26	35
Max. Flow rate (m^3/h)	44	56	76	96
Discharge diameter DN	65	65	65	65
Free passage (mm)	65	65	65	65
Max. Temperature of the pumped liquid (5 min max)	40 °C	40 °C	40 °C	40 °C
Identification and logistics				
Gross weight (kg)	65	65	69	91
Barcode	3308815090252	3308815090269	3308815090276	3308815090283
Product code	**31024**	**31025**	**31026**	**31027**

BASE FOR DN 65



Base for DN 65 Guide bars not supplied but the unit is compatible with 2 bars 33.7 x 3.2

3308815090375
Product code 21505
Base for DN 65 2 guide bars (delivered without bar)

BASE FOR DN 65/80



Base for DN 65/80 Guide bars not supplied but the unit is compatible with 2 bars 33.7 x 3.2

3308815090399
Product code 21506
Base for DN 65/80 2 guide bars (delivered without bar)

	Sanipump VX 80-220/160.40	Sanipump VX 80-220/170.49	Sanipump VX 80-220/190.73
Type of impeller	Vortex	Vortex	Vortex
Material			
Shaft	Stainless steel	Stainless steel	Stainless steel
Pump housing	EN-GJL-250	EN-GJL-250	EN-GJL-250
Motor seal	SIC/SIC/NBR	SIC/SIC/NBR	SIC/SIC/NBR
Pump seal	Carbon/Al203	Carbon/Al203	Carbon/Al203
Motor housing	EN-GJL-250	EN-GJL-250	EN-GJL-250
Impeller	EN-GJL-250	EN-GJL-250	EN-GJL-250
Electrical features			
Voltage (V)	400	400	400
Frequency (Hz)	50	50	50
Power consumption P1 (W)	4860	5830	8720
Power output P2 (W)	4000	4900	7300
Revolutions per minute (RPM)	2900	2900	2900
Electrical class	I	I	I
Motor insulation class	F	F	F
Duty cycle (submerged)	S1	S1	S1
Max. number of starts per hour	30	30	30
Immersion depth (m)	25	25	25
Power cable (m)	10	10	10
Power cable: type of cable, section (mm^2)	H07 RN8-F, 4x1	H07 RN8-F, 4x1	H07 RN8-F, 4x1
Hydraulics			
Max. Head (m)	21	24	30
Max. Flow rate (m^3/h)	80	95	110
Discharge diameter DN	80	80	80
Free passage (mm)	80	80	80
Max. Temperature of the pumped liquid (5 min max)	40 °C	40 °C	40 °C
Identification and logistics			
Gross weight (kg)	73	91	96
Barcode	3308815090290	3308815090306	3308815090313
Product code	**31028**	**31029**	**31030**

BASE FOR DN 80



Base for DN 80 Guide bars not supplied but the unit is compatible with 2 bars 60.3 x 3.6

3308815090382
Product code 21507
Base for DN 80 2 guide bars (delivered without bar)

BASE FOR DN 80/100



Base for DN 80/100 - Base for DN 80/100 Guide bars not supplied but the unit is compatible with 2 bars 60.3 x 3.6

3308815090405
Product code 21508
Base for DN 80/100 2 guide bars (delivered without bar)

Pumps and Stations Accessories





Alarms and control boxes

P.147



Sanifos accessories

P.149



Sanicubic accessories

P.150



Submersible accessories

P.152

Alarms and control boxes

Audible and visual wireless alarm

The wired alarm box allows monitoring of the station from an adjoining room via a 5 m cable. The alarm gives a warning of an abnormally high water level or of an electrical fault in the station.

- Protection class IP44
- 5 m of cable



Dimensions (mm)

Product	Barcode	Product code	Compatible with	Standard or Optional
Alarm for Com 1 & Cubic 1	3308815083384	**30520**	Sanicom 1, Sanicubic 1 GR HP L, Sanicubic 1 VX L	Optional
Alarm for Com 2 & Cubic 2	3308815084107	**30521**	Sanicom 2, Sanicubic 2 Classic L, Sanicubic 2 Pro Smart L, Sanicubic 2 Pro Smart Brushless L, Sanicubic 2 GR HP L, Sanicubic 2 VX L, Sanicubic 2 VX S Smart L, Sanicubic 2 VX T Smart L	Optional
Wired alarm box	-	-	Sanicubic 1/1 VX/2 Classic/2 Pro/2VX Sanifos 610 2 pumps Sanifos 1300 2 pumps	Standard

Sanifos wired alarm



The Sanifos alarm is a kit consisting of an audible and visual alarm box and a float.

- Float cable-to-housing not included

Product	Barcode	Product code	Compatible with	Standard or Optional
Wired alarm	3308815081625	**40501**	Sanifos 280 1 pump Sanifos 610 single phase, 1 pump	Optional

HF alarm



The 868 MHz HF alarm (radio transmission) monitors the correct operation of your station and has a range of 100 m. It gives information on the status of the station in real time.

Product	Barcode	Product code	Compatible with	Standard or Optional
HF alarm	-	-	Sanicubic 2 Pro	Standard

230V grease alarm with probe/control box



- Audible and visual alarm
- Grease level detection in the separator compartment
- Low water detection
- Improved emptying management
- Includes: housing, probe and cable
- Dimensions: W 125 x H 75 x D 35 (mm)

Product	Barcode	Product code	Compatible with	Standard or Optional
230V grease alarm with probe/ control box	3308815082653	80015	Sanigrease S 680/1600 (C), Sanigrease S ST/AD/PM, Sanigrease SU 1/1.5/2/3/4	Optional

Classic control box



Dimensions (mm)

The control box comes with a 4 m cable allowing it to be installed away from the unit. It allows the monitoring of your lifting station with the facility of activating a manual start if needed. A visual and audible alarm is triggered in the event of an abnormally high water level in the tank or in the event of a power failure.

Product	Barcode	Product code	Compatible with	Standard or Optional
Classic control box	-	-	Sanicom 2, Sanicubic 1, Sanicubic 1 VX, Sanicubic 2 Classic, Sanicubic 2 Pro, Sanicubic 2 VX	Standard

Smart control box



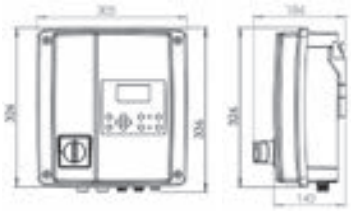

The Smart box is a control and monitoring solution that has connectors for a simple installation. The interface allows easy use and management of the station and real time information of the unit's activity and operating history. This control box is used to modify the pump management parameters.

Dimensions (mm)

Product	Barcode	Product code	Compatible with	Standard or Optional
Smart control box	-	-	Sanicubic 2 Pro, Sanicubic 2 VX Smart, Sanifos 610 2 pump, Sanifos 1300	Standard

ZPS control boxes



ZPS 1 control box



ZPS 2 control box



ZPS control boxes are available in 8 models depending on whether they control 1 or 2 pumps, single or three-phase and finally if the control is pneumatic or with a float (for configuration with Sanifos 1600/2100/3100, see page 116).

Equipped with an integrated audible and visual alarm, they display the operating states of the pump(s) by text messages and indicator light. The internal memory stores up to 64 messages. Operation is automatic in the case of a single pump, and alternately for dual pump stations, with engagement of the second pump if necessary. The level control is via a pressure transducer, float switch or 4–20 mA interface for external sensor. The display also shows operating hours and power consumption as well as maintenance intervals. Wall mounting provided.

Product	Barcode	Product code	Compatible with
ZPS 1 S PNEUMATIC CONTROL BOX	3308815081793	**21863**	Sanicubic 1 GR/SC, Sanipump ZFS/ZPG/SLD x1
ZPS 2 S PNEUMATIC CONTROL BOX	3308815081809	**21864**	Sanicubic 2 GR/SC, Sanipump ZFS/ZPG/SLD x2
ZPS 1 T PNEUMATIC CONTROL BOX	3308815081816	**21884**	Sanicubic 1 GR/SC, Sanipump ZFS/ZPG/SLD x1
ZPS 2 T PNEUMATIC CONTROL BOX	3308815081823	**21885**	Sanicubic 2 GR/SC, Sanipump ZFS/ZPG/SLD x2
ZPS 1 S FLOAT CONTROL BOX	3308815081830	**21865**	Sanicubic 1 GR/SC, Sanipump ZFS/ZPG/SLD x1
ZPS 2 S FLOAT CONTROL BOX	3308815081847	**21866**	Sanicubic 2 GR/SC, Sanipump ZFS/ZPG/SLD x2
ZPS 1 T FLOAT CONTROL BOX	3308815081854	**21867**	Sanicubic 1 GR/SC, Sanipump ZFS/ZPG/SLD x1
ZPS 2 T FLOAT CONTROL BOX	3308815081878	**21868**	Sanicubic 2 GR/SC, Sanipump ZFS/ZPG/SLD x2

PS 2 control box



- Control system consisting of a control box incorporated in the door of the electrical cabinet and a control unit clipped onto a rail.
- Ability to connect various level sensors
- Complete management of pump operation via LCD screen and digital potentiometer.
- 8 LEDs show pump states and faults.
- Dimensions: L 600 x H 600 x D 210 mm.

Product	Barcode	Product code	Compatible with	
PS 2 control box	-	-	Sanicubic SC7.5T	Standard

Sanifos accessories

Dimensions Sanifos 280/610/1300 with extension

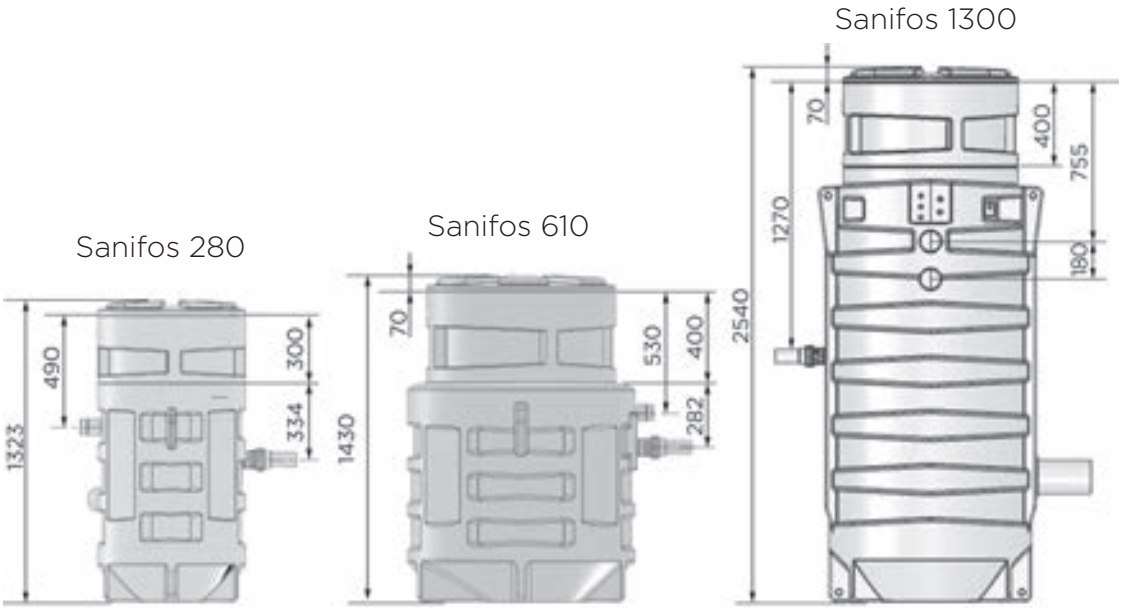

Dimensions (mm)

Product name	Product	110	280	610 1300	1600 2100 3100	Product code	Barcode
Cover A					X	**16035**	3308815081946
Cover B					X	**16038**	3308815081953
Cover D					X	**16044**	3308815081960
Cover D + GAC 600					X	**30513**	3308815082677
Cover D + GAC 800					X	**30514**	3308815082684
Aqua XL float 10m					X	**41000**	3308815082691
Aqua XL float 20m					X	**41001**	3308815082707
Complete outdoor cabinet Type 1					X	**12082**	3308815082394
Complete outdoor cabinet Type 3				X	X	**12085**	3308815082400
Sanifos extension 610/1300				X		**40503**	3308815077826
Sanifos extension 280			X			**40502**	3308815081298
150 kg non-equipped jib crane					X	**30511**	3308815082905
150 kg jib crane equipped with a winch					X	**30510**	3308815082899
Ground fixing base for 150 kg jib crane					X	**30512**	3308815082912
Sanifos 110 evacuation kit		X				**40500**	3308815077024
Sanipump VX 50 coupling claw					X	**21509**	3308815090665

Sanicubic accessories

Product name	Product	GR	SC	1, 2 Classic, 2 Pro, 1 VX, 2 VX	Product code	Barcode
Cast iron isolation valve DN50		X			**10646**	3308815082042
Cast iron isolation valve DN100		X	X		**10649**	3308815082165
Cast iron isolation valve DN125		X	X		**10650**	3308815082172
Cast iron isolation valve DN150		X	X		**10651**	3308815082189
2" non-return ball valve IG GG PN10		X	X		**12104**	3308815082127
Cast iron check ball valve DN100		X	X		**14398**	3308815082196
DN125/100 reducer, PE with flange		X	X		**10452**	3308815082202
DN150/100 reducer, PE with flange		X	X		**10453**	3308815082219
Y pipe connection DN100/100 / 100PE (for 2 pump models)		X	X		**11999**	3308815082226
Hose connection 1 ¼" VA (for Sanicubic 2 GR SE 71)		X			**17755**	3308815082233
1 ½" manual diaphragm pump		X	X		**10430**	3308815082240
Cast iron non-return valve DN50		X			**14394**	3308815082035
Mounting accessories DN50 VA (Stainless steel)		X			**15438**	3308815082271

Product name	Product	GR	SC	1, 2 Classic, 2 Pro, 1 VX, 2 VX	Product code	Barcode
Mounting accessories DN100 VA (Stainless steel)		X	X		**15441**	3308815082332
Mounting accessories DN150 VA (Stainless steel)		X	X		**15443**	3308815082370
Brass 2" isolation valve				X (Not VX)	**1109**	
Slice gate valve DN50				X	**30504**	3308815061030
Slice gate valve DN100				X	**1107/1**	3308815061023
Ball shut-off valve DN100				X (2 VX)	**1103**	3308815066820
Sanicubic carbon filter				X (not VX)	**1108**	3308815076867
Sanicubic carbon filter				X (VX)	**1108/1**	3308815076874

Submersible accessories

Sanipump ZFS assembly

fig. A: with rail

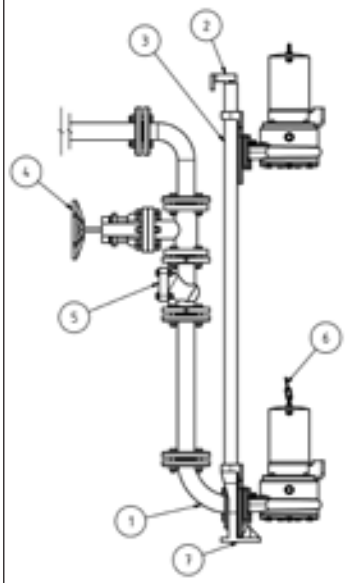

fig. B: without rail

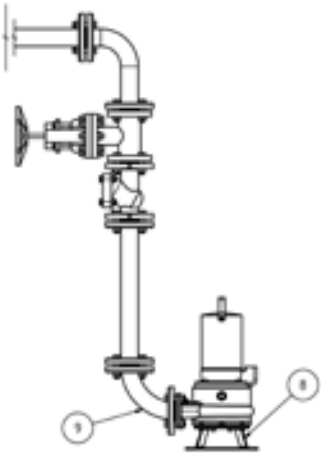

Sanipump SLD

fig. C: without rail



fig. D: with rail

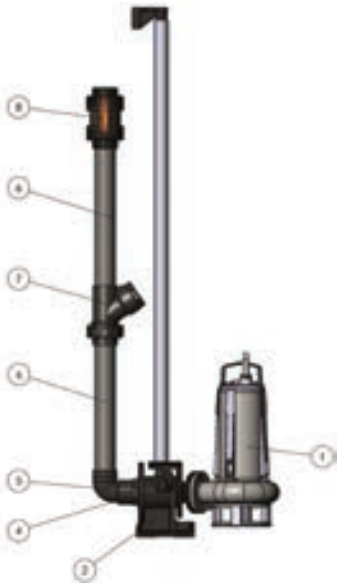

Product name	Product	Sub Steel	Sub ZPK	ZPG	ZFS	Product code	Barcode	Drawing number
ZFS floor installation kit					X	**12019**	3308815081977	Fig. B 8
ZFS / ZPG 71 coupling system				X	X	**12029**	3308815081984	Fig. A: 2 & 7
Non-return valve 1 ¼" PE DN32			X			**14393**	3308815082455	
Outlet elbow with integrated valve			X			**17016**	3308815082462	
Cast iron valve 1 ¼"			X	X	X	**10638**	3308815082479	Fig. A
90 degree elbow connection DN50 PE				X	X	**11927**	3308815081991	Fig. A 1, Fig. B 9

Product name	Product	Sub Steel	Sub ZPK	ZPG	ZFS	SLD	VX50	VX65	VX80	Product code	Barcode	Drawing number
Mounting accessories DN 50 VA 16x60				X	X	X				**30500**	3308815082271	
Accessories for standard 2“ drainage kit						X				**30501**	3308815084022	
Accessories for discharge kit 2“ coupling system						X				**30502**	3308815084039	
Threaded flange DN50 IG 2“ VZ PN10 / 16				X	X	X				**30503**	3308815082110	
Stainless steel lifting chain sold by the metre				X	X	X				**30504**	3308815082066	
Check ball valve DN 65 cast iron								X		**30505**	3308815090498	
Check ball valve DN 80 cast iron									X	**30506**	3308815090511	
Check ball valve DN 100 cast iron									X	**30507**	3308815082196	
2“ non-return ball valve IG GG PN10				X	X	X				**12104**	3308815082127	
Discharge pipe DN50 1 m PE 1x flange				X	X	X				**12048**	3308815082097	
Discharge pipe DN50 1 m PE 2x flange				X	X	X				**12055**	3308815082103	
90 degree elbow connection DN50 VA				X	X					**12347**	3308815082004	A 1, B9
Standard 2“ drain assembly for assembly without base						X				**30508**	3308815083995	C2, C3, C4, C5
Standard 2“ drain assembly for assembly with base						X				**30509**	3308815084008	D4, D5, D6, D7, D8
Kit for transportation							X			**21500**	3308815090320	
Shackle NG 5 VA				X	X	X				**16552**	3308815082080	
Base for DN 65 Guide bars not supplied								X		**21505**	3308815090375	
Base for DN 80 Guide bars not supplied									X	**21507**	3308815090382	
Base for DN 65/80 Guide bars not supplied								X		**21506**	3308815090399	
Base for DN 80/100 Guide bars not supplied									X	**21508**	3308815090405	
Base for Sanipump VX 50 and guide bracket 120							X			**21502**	3308815090337	
Base for Sanipump VX 50 and guide bracket 150							X			**21503**	3308815090344	
base for Sanipump VX 50 and guide bracket 180							X			**21504**	3308815090351	
Sanipump base and single guide bracket							X			**21501**	3308815090368	
SLD coupling system						X				**21527**	3308815084176	D2
C 2“ - 20 m hose with C11359B coupling		X								**11359**	3308815082158	
Inlet pipe 1 m 2 PE flanges DN 65								X		**21528**	3308815090535	
Inlet pipe 1 m 2 PE flanges DN 80									X	**21529**	3308815090542	
Cast iron valve 1 ¼“			X	X	X	X				**10638**	3308815082479	
Cast iron isolation valve DN50				X	X		X			**10646**	3308815082042	
Cast Iron isolation valve DN65								X		**21530**	3308815090504	
Cast Iron isolation valve DN80									X	**21531**	3308815090528	
Cast Iron isolation valve DN100									X	**21532**	3308815082165	



GREASE TRAPS & SEPARATORS

In the UK, there are a number of Acts of Parliament, regulations and legislation, which commercial kitchen operators such as restaurants, hotels, pubs, fast food takeaways and cafes serving hot food must be aware of.

They must have grease traps or other effective grease removal systems, as mandated by the Building Regulations 2010 (Part H) and the Water Industry Act 1991, to prevent fats, oils, and grease (FOG) from entering the drainage system. This helps keep pipework clear and prevents a build-up of blockages. Saniflo has a range of grease traps suitable for many industries.

To choose your Saniflo grease trap you need to consider the volume of the tank, the installation location, maintenance needed and if an alarm is needed for your installation. We are here to help you with your choice should you need any advice why not give us a call on 0208 842 0033

Sanigrease INSTALLATION
GREASE SEPARATORS

The functions of grease traps and separators

Every restaurant produces waste water that is loaded with fatty and oily substances. They cause significant deposits in the pipes. These deposits disrupt the proper functioning of the drainage networks and the waste water treatment plants (WWTP).

The installation of a grease separator allows food particles and grease to be retained at the source. This avoids any damage to water and public sewage equipment. To maximise performance, weekly checks are advised for grease traps. But at a minimum, grease trap maintenance must be carried out every 4-6 weeks depending on the volume of the kitchen.

Make your choice

In order to choose the best product for your needs, you should consider the following:

Tank volume

The volume of the tank depends on the number of meals per service and the volume of water. Plan to double the volume of the tank in relation to the incoming water flow. The use of dishwasher degreasing detergents limits the amount of grease to be removed.

The location of the installation

Type T separators can be installed directly under a restaurant sink. The S 680 and S 1600 type separators, which can take larger volumes of water, should be installed lower (perhaps on a floor below). In both cases, it is necessary to provide a space around the separator for maintenance.

Grease level detection alarm

For separators installed in a room other than the kitchen, the installation of an alarm is recommended.

Maintenance

Grease removal should be carried out daily for the Sanigrease T and monthly for the Sanigrease S. The drain valve, the drain column and the alarm facilitate this maintenance.



Example of a Sanigrease T 40 installation



Grease traps and Separators

Product	Image	Number of meals/ service or meals/day	Retention	Useful Volume (L)	TN	Drain column
Sanigrease T 24 P.158		Food-truck 1 sink	Sludge collector	24	0.5	-
Sanigrease T 40/60/80/100 P.159		1 to 4 sinks ≤ 40/60/80/100	Peeling basket	39/53 /67/82	-	-
Sanigrease S ST NEW P.160		-	Sludge collector	650/850/ 1660/ 2076 /3300	2/4/7 10/15	-
Sanigrease S AD NEW P.162		-	Sludge collector			●
Sanigrease S MX NEW P.164		-	Sludge collector			●
Sanigrease S PM NEW P.166		-	Sludge collector			●
Sanigrease S PA NEW P.168		-	Sludge collector			●
Sanigrease S 680 P.170		Restaurant ≤104 Hospital ≤295 Canteen ≤440	Sludge collector	680	2	-
Sanigrease S 680 C					2	●
Sanigrease S 1600 P.170		Restaurant ≤209 Hospital ≤591 Canteen ≤886	Sludge collector	1600	4	-
Sanigrease S 1600 C					4	●
Sanigrease SU 1/1.5/2/3/4 P.172		Restaurant ≤52-209 Hospital ≤148-591 Canteen ≤222-886	Sludge collector	340/660 /690/ 1030/ 1500	1/1.5 /2/3/4	-

How does a grease separator work?



A grease separator works based on a simple principle:
the difference in density between water, fats and solid matter.

1. Kitchen waste water enters the separator tank.
2. Solid particles (food scraps, sand, etc.) settle to the bottom.
3. Grease, being lighter than water, floats to the surface.
4. The pre-treated water, now free of pollutants, can then be discharged into the sewer system.

This entirely mechanical system requires neither chemicals nor energy.

OPERATING DIAGRAM OF THE GREASE SEPARATOR

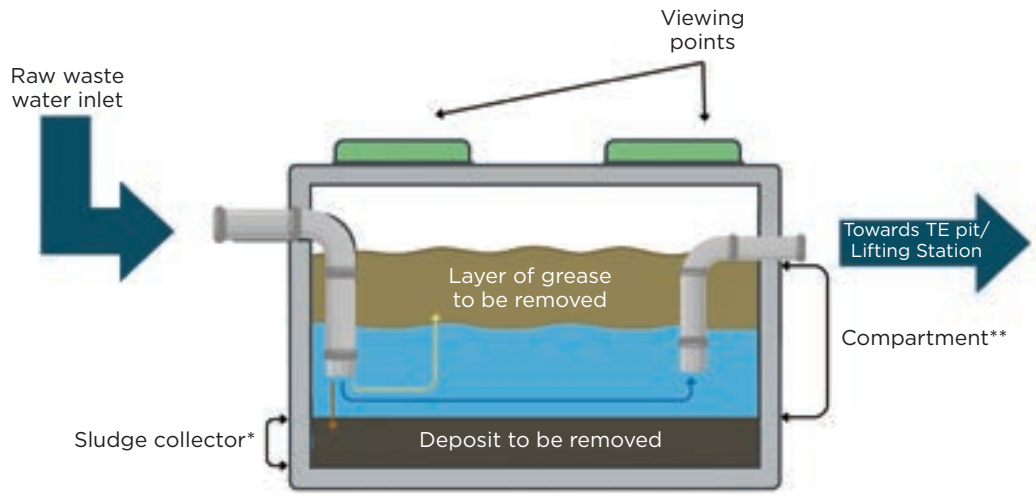

*The lower layer where heavy sediments such as sludge settle.
**The grease separation compartment or chamber (for water and grease).

Sanigrease T 24

Sanigrease T 24 is a polyethylene grease trap designed for frost-free installation for mobile units such as food trucks or mobile dishwashers. Sanigrease T 24, with its small size and light weight (4 kg), can be installed extremely easily under a professional sink for occasional use thanks to its DN50 inlets and outlets.

Sanigrease T 24 has a total capacity of 24 L and a maximum grease volume of 8 L. It must be emptied daily. To facilitate this process, a drain valve is available as an option.



2-year warranty

See page 9

PRODUCT BENEFITS

- Space-saving
- Mobile use: food-truck, mobile dishwashers
- Light to handle: 4 kg
- Inlets and outlets in DN50

OPTIONAL EXTRAS

Sanigrease Drain Tap
3308815082646
80000



TECHNICAL FEATURES

Material	
Tank	PE
Hydraulics	
Volume of sludge trap (L)	8
Total volume (L)	24
Inlet diameter DN	50
Discharge diameter DN	50
Identification and logistics	
Gross weight (Kg)	4
Barcode	3308815082585
Product code	**80001**

DIMENSIONS

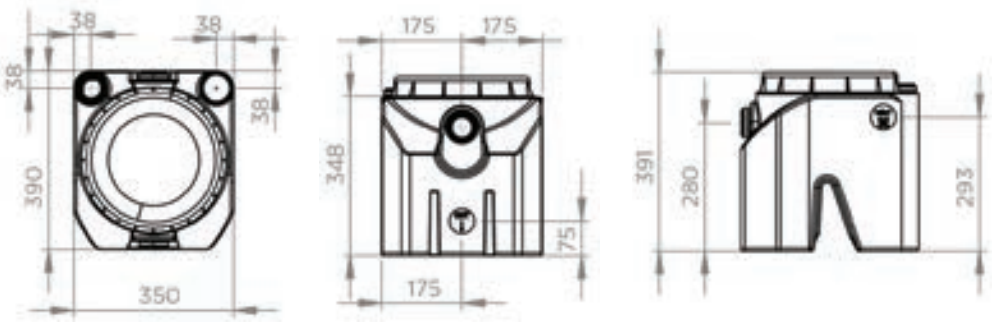

Dimensions (mm)

Sanigrease T 40/60/80/100

The Sanigrease T 40/60/80/100 are grease traps designed for restaurant kitchen sinks. Thanks to their small size, they are quick and easy to install. The four height-adjustable feet make it easy to clean around the trays. Maintenance is made easier by the removable peelings basket and its drain valves.



2-year warranty

See page 9

PRODUCT BENEFITS

- Space-saving
- Quick and easy cleaning thanks to drain valves
- Four height-adjustable feet
- 304 L stainless steel bowl
- Removable peel basket

TECHNICAL FEATURES

	Sanigrease T 40	Sanigrease T 60	Sanigrease T 80	Sanigrease T 100
Material				
Tank	Stainless steel	Stainless steel	Stainless steel	Stainless steel
Hydraulics				
Total volume (L)	39	53	67	82
Inlet diameter DN	32	32	50	50
Discharge diameter DN	32	32	50	50
Drain diameter DN	25	25	25	25
Identification and logistics				
Gross weight (Kg)	26	29	36	40
Barcode	3308815082547	3308815082554	3308815082561	3308815082578
Product code	**80002**	**80003**	**80004**	**80005**

DIMENSIONS

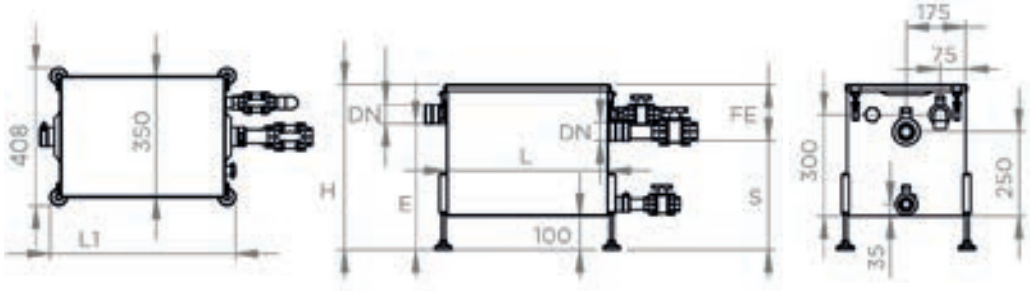

	T40	T60	T80	T100
L	480	540	640	730
L1	550	610	710	800
H	484	534	574	594
E	385	435	453	473
S	330	380	400	420
FE	154	154	174	174
DN	32	32	50	50

Dimensions (mm)

Sanigrease S ST

The Sanigrease S 2/4/7/10/15 ST are grease separators, designed for indoor installation and available in 5 sizes. They are lightweight, robust and a durable rotomoulded polyethylene tank incorporates a sludge trap and an angled base for easy draining. Two airtight lids prevent the spread of odours and allow the extraction of grease. Practical and easy to use, this version is ideal for installations where efficiency and basic maintenance are required.



2-year warranty

See page 9

PRODUCT BENEFITS

- Tank width of 700 mm on sizes 2 and 4 (door passage)
- Rotomoulded polyethylene tank with integrated silt trap
- Angled base for complete drainage
- Odour-proof airtight covers

OPTIONAL EXTRAS



Sampling device DN100
Barcode: 3308815090740
Product code: 80016
Compatible with sizes 2 and 4



Sampling device DN150
Barcode: 3308815090757
Product code: 80017
Compatible with sizes 7, 10, and 15



Grease alarm 230V sensor/case
Barcode: 3308815082653
Product code: 80015

TECHNICAL FEATURES

	Sanigrease S 2ST	Sanigrease S 4ST	Sanigrease S 7ST	Sanigrease S 10ST	Sanigrease S 15ST
Nominal size (NS)	2	4	7	10	15
Material					
Tank	HDPE	HDPE	HDPE	HDPE	HDPE
Hydraulics					
Volume of sludge trap (L)	200	400	700	1000	1500
Volume of separator compartment (L)	450	450	960	1076	1800
Fat volume (L)	80	160	280	400	600
Total volume (L)	650	850	1660	2076	3300
Inlet diameter DN	110	110	160	160	200
Discharge diameter DN	110	110	160	160	200
Identification and logistics					
Barcode	3308815103181	3308815103198	3308815103204	3308815103211	3308815103228
Product code	**80018**	**80019**	**80020**	**80021**	**80022**

DIMENSIONS

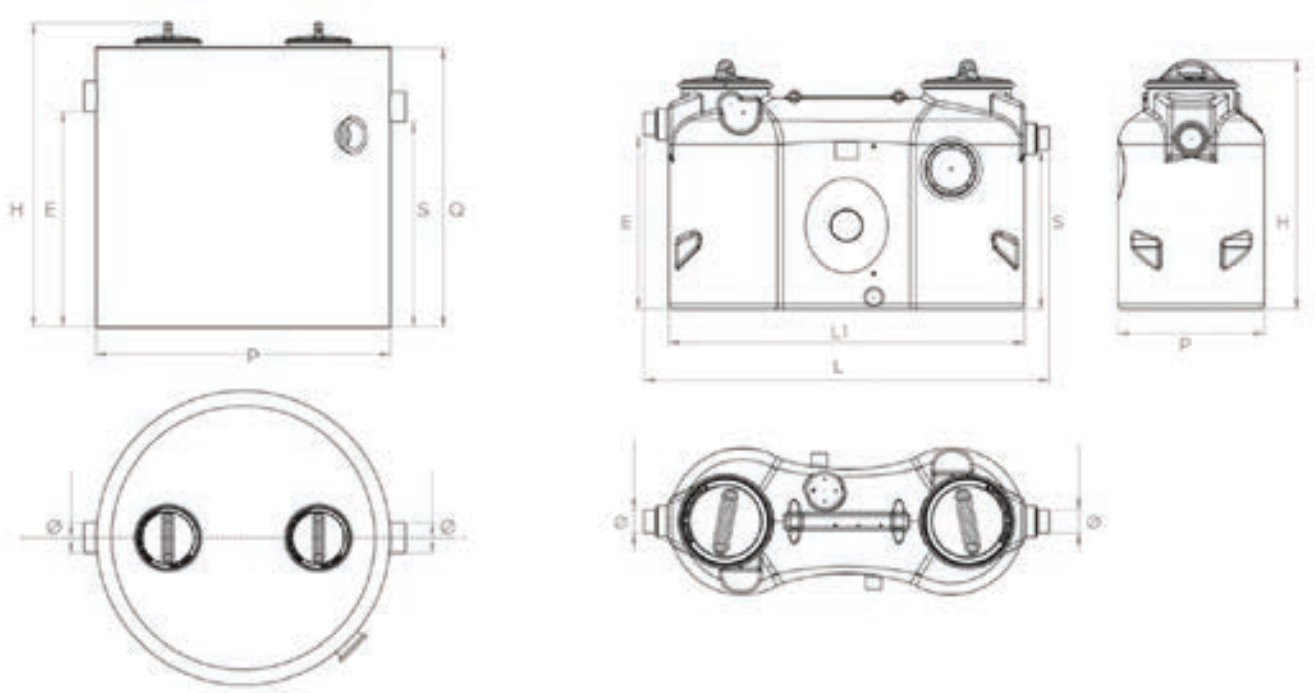

	L1	L	S	E	H	P	Ø
Sanigrease S 2ST	1700	1940	760	830	1190	700	110
Sanigrease S 4ST	1700	1940	1000	1070	1430	700	110
Sanigrease S 7ST	1776	1870	1270	1340	1750	980	160
Sanigrease S 10ST	2356	2485	1270	1340	1750	980	160

	E	H	S	Q	P	Ø
Sanigrease S 15ST	1430	2019	1360	1850	1953	200

Dimensions (mm)

Sanigrease S AD

Sanigrease S 2/4/7/10/15 AD are grease separators, available in 5 sizes, designed for indoor installation. They are lightweight, robust and durable rotomoulded polyethylene tank incorporates a sludge trap and an angled base for easy draining. Two airtight covers prevent the spread of unpleasant odours, while a viewing window with wiper allows the level to be checked without opening the tank. Equipped with a manual water fill unit and suction via a draining column, the AD version simplifies maintenance operations and ensures optimal hygiene.



2-year warranty

See page 9

PRODUCT BENEFITS

- Tank width of 700 mm on sizes 2 and 4 (door passage)
- Rotomoulded polyethylene tank with integrated sludge trap
- Angled base for complete drainage
- Odour-proof airtight covers
- Porthole with wiper for inspection
- Manual water filling unit
- Grease suction by drain column

DELIVERED AS STANDARD



Inspection window



Extraction hose



Filling unit

OPTIONAL EXTRAS



Sampling device DN100
Barcode: 3308815090740
Product code: 80016
Compatible with sizes 2 and 4



Sampling device DN150
Barcode: 3308815090757
Product code: 80017
Compatible with sizes 7, 10, and 15



Grease alarm 230V sensor/case
Barcode: 3308815082653
Product code: 80015

TECHNICAL FEATURES

Nominal size (NS)	2	4	7	10	15
Material					
Tank	HDPE	HDPE	HDPE	HDPE	HDPE
Hydraulics					
Volume of sludge trap (L)	200	400	700	1000	1500
Volume of separator compartment (L)	450	450	960	1076	1800
Fat volume (L)	80	160	280	400	600
Total volume (L)	650	850	1660	2076	3300
Inlet diameter DN	110	110	160	160	200
Discharge diameter DN	110	110	160	160	200
Identification and logistics					
Barcode	3308815103235	3308815103242	3308815103259	3308815103266	3308815103273
Product code	**80023**	**80024**	**80025**	**80026**	**80027**

DIMENSIONS

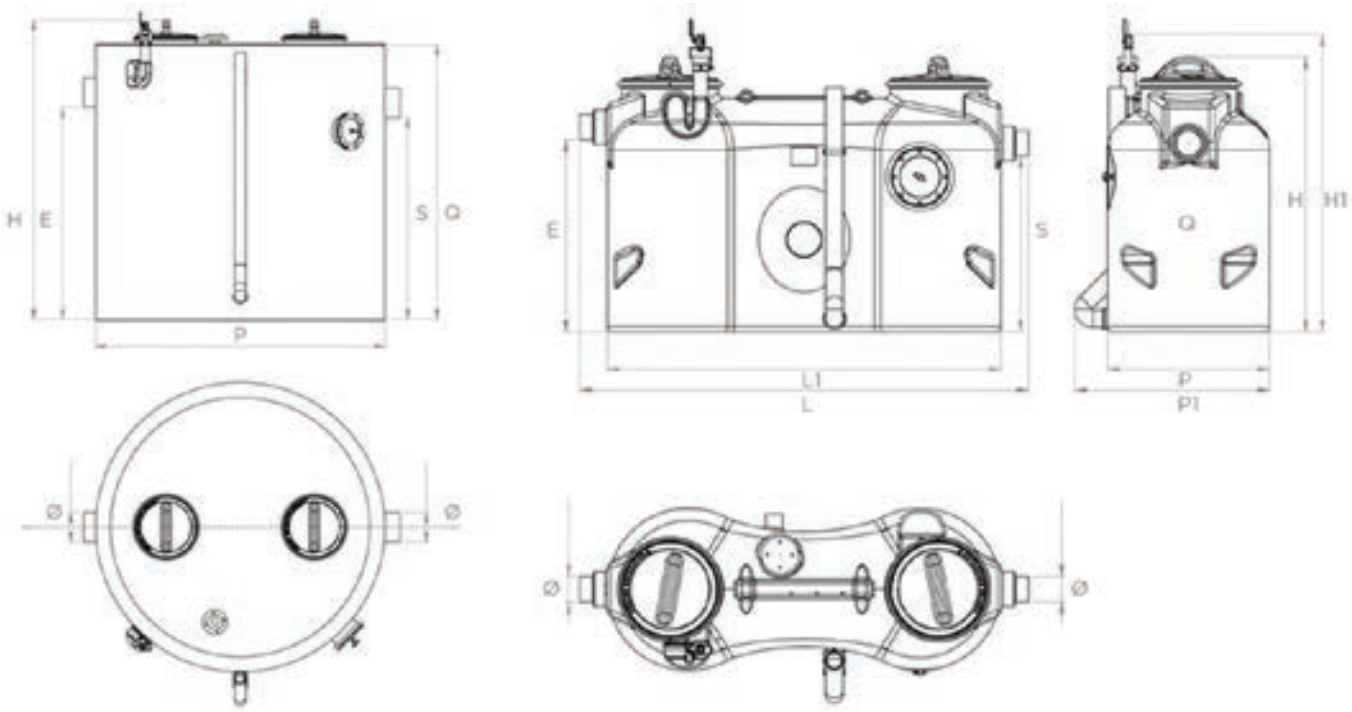

	L1	L	S	E	H	H1	P	P1	Ø
Sanigrease S 2AD	1700	1940	760	830	1190	1286	700	842	110
Sanigrease S 4AD	1700	1940	1000	1070	1430	1526	700	842	110
Sanigrease S 7AD	1776	1870	1270	1340	1750	1816	980	1080	160
Sanigrease S 10AD	2356	2485	1270	1340	1750	1816	980	1080	160

	E	H	S	Q	P	Ø
Sanigrease S 15AD	1430	2019	1360	1850	1953	200

Dimensions (mm)

Sanigrease S MX

Sanigrease S 2/4/7/10/15 MX are grease separators, designed for indoor installation and available in 5 sizes. They are lightweight, robust and durable rotomoulded polyethylene tank incorporates a sludge trap and an angled base for easy draining. Two airtight covers prevent any odour nuisance, while a porthole with wiper allows the level to be checked. The MX version is equipped with a control panel, a grease level alarm and a 2-impeller mixer, enabling optimised emptying frequency and ensuring optimal hygiene.



2-year warranty

See page 9

PRODUCT BENEFITS

- Tank width of 700 mm on sizes 2 and 4 (door passage)
- Rotomoulded polyethylene tank with integrated sludge trap
- Angled base for complete drainage
- Odour-proof airtight covers
- Window with wiper for inspection
- Control panel
- Grease level detection alarm

DELIVERED AS STANDARD



Inspection window



Extraction hose



Filling unit



Mixer



Control panel



Grease alarm 230V sensor/case

OPTIONAL EXTRAS



Sampling device DN100
Barcode: 3308815090740
Product code: 80016
Compatible with sizes 2 and 4



Sampling device DN150
Barcode: 3308815090757
Product code: 80017
Compatible with sizes 7, 10, and 15

TECHNICAL FEATURES

Nominal size (NS)	2	4	7	10	15
Material					
Tank	HDPE	HDPE	HDPE	HDPE	HDPE
Hydraulics					
Volume of sludge trap (L)	200	400	700	1000	1500
Volume of separator compartment (L)	450	450	960	1076	1800
Fat volume (L)	80	160	280	400	600
Total volume (L)	650	850	1660	2076	3300
Inlet diameter DN	110	110	160	160	200
Discharge diameter DN	110	110	160	160	200
Identification and logistics					
Barcode	3308815103426	3308815103280	3308815103297	3308815103303	3308815103310
Product code	**80028**	**80029**	**80030**	**80031**	**80032**

DIMENSIONS

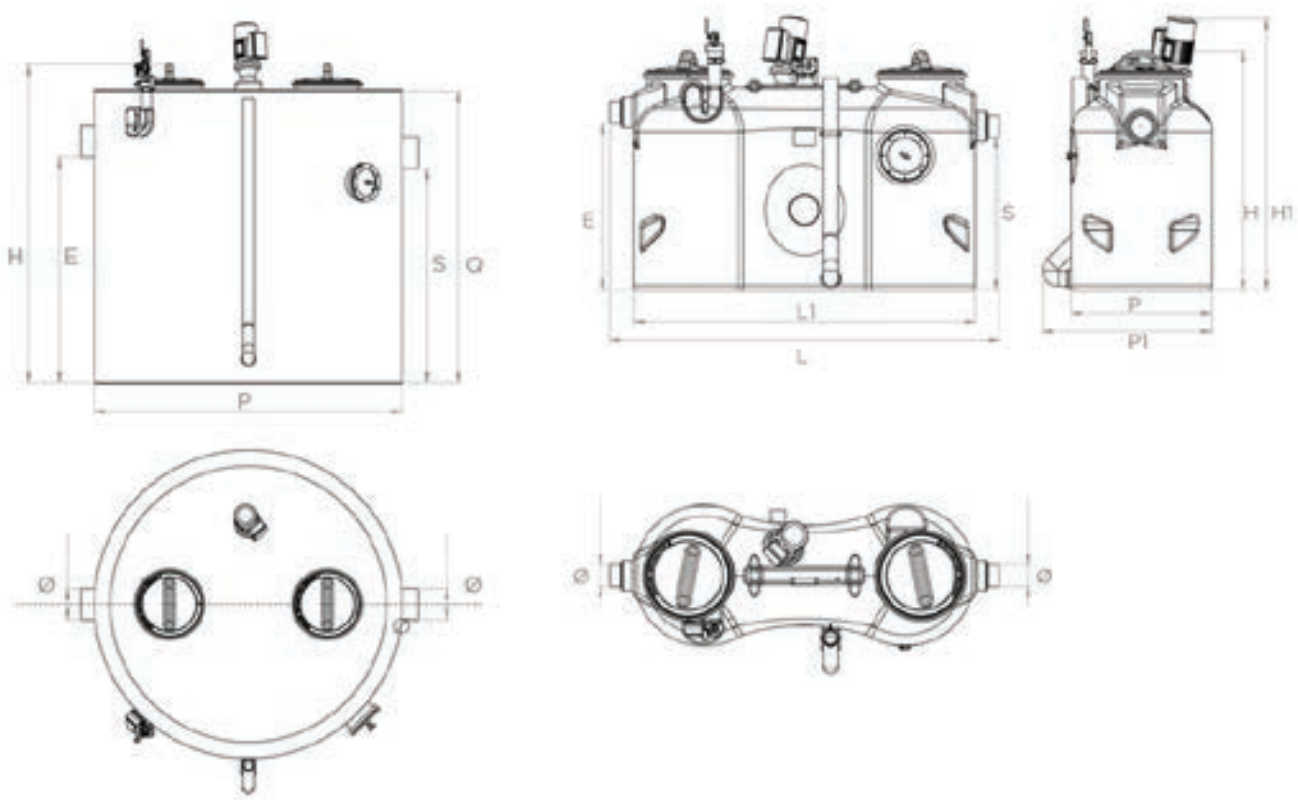

	L1	L	S	E	H	H1	P	P1	Ø
Sanigrease S 2MX	1700	1940	760	830	1190	1352	700	842	110
Sanigrease S 4MX	1700	1940	1000	1070	1430	1950	700	842	110
Sanigrease S 7MX	1776	1870	1270	1340	1750	1892	980	1080	160
Sanigrease S 10MX	2356	2485	1270	1340	1750	1891	980	1080	160

	E	H	S	Q	P	Ø
Sanigrease S 15MX	1430	2019	1360	1850	1953	200

Dimensions (mm)

Sanigrease S PM

The Sanigrease S 2/4/7/10/15 PM are grease separators designed for indoor installation and offered in 5 sizes. They are lightweight, robust and durable rotomoulded polyethylene tank incorporates a sludge trap and an angled base for easy draining. This version is equipped with a control panel, a porthole with wiper, a manual filling unit, a vortex impeller pump and a three-way valve. This system efficiently stirs grease, fragments solid particles and evacuates them automatically to an external tank via the drain column. Each step is manually activated by the operator, offering complete control over the process. An ultra-high-performance system that reduces maintenance time and limits complex handling.



2-year warranty

See page 9

PRODUCT BENEFITS

- Tank width of 700 mm on sizes 2 and 4 (door passage)
- Rotomoulded polyethylene tank with integrated sludge trap
- Angled base for complete drainage
- Odour-proof airtight covers
- Control panel
- Window with wiper for inspection
- Vortex pump for mixing and evacuation

DELIVERED AS STANDARD



Inspection window



Extraction hose



Filling unit



Control panel



Drain pump

OPTIONAL EXTRAS



Sampling device DN100
Barcode: 3308815090740
Product code: 80016
Compatible with sizes 2 and 4



Sampling device DN150
Barcode: 3308815090757
Product code: 80017
Compatible with sizes 7, 10, and 15



Grease alarm 230V sensor/case
Barcode: 3308815082653
Product code: 80015

TECHNICAL FEATURES

Nominal size (NS)	2	4	7	10	15
Material					
Tank	HDPE	HDPE	HDPE	HDPE	HDPE
Hydraulics					
Volume of sludge trap (L)	200	400	700	1000	1500
Volume of separator compartment (L)	450	450	960	1076	1800
Fat volume (L)	80	160	280	400	600
Total volume (L)	650	850	1660	2076	3300
Inlet diameter DN	110	110	160	160	200
Discharge diameter DN	110	110	160	160	200
Identification and logistics					
Barcode	3308815103327	3308815103334	3308815103341	3308815103358	3308815103365
Product code	**80033**	**80034**	**80035**	**80036**	**80037**

DIMENSIONS

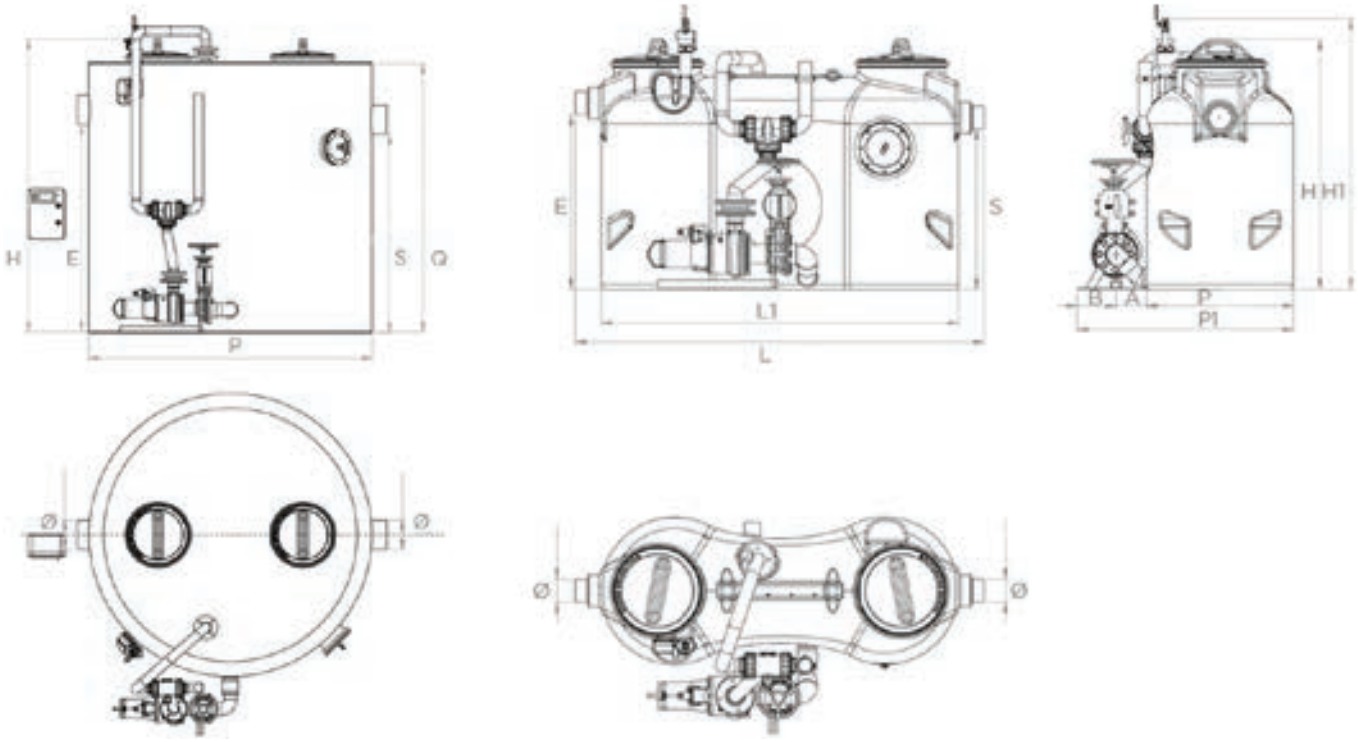

	L1	L	S	E	H	H1	P	P1	A	B	Ø
Sanigrease S 2PM	1700	1940	760	830	1189	1287	700	1027	140	327	110
Sanigrease S 4PM	1700	1940	1000	1070	1429	1527	700	1027	140	327	110
Sanigrease S 7PM	1776	1870	1270	1340	1750	1816	980	1300			160
Sanigrease S 10PM	2356	2485	1270	1340	1750	1816	980	1300			160

	E	H	S	Q	P	Ø
Sanigrease S 15PM	1430	2019	1360	1850	1953	200

Dimensions (mm)

Sanigrease S PA

Sanigrease S 2/4/7/10/15 PA are grease separators designed for fully automated management. Suitable for indoor installation and available in 5 sizes, they feature a rotomoulded polyethylene tank, combined with a sludge trap with an angled base for optimal drainage. This version is equipped with a porthole with wiper, a mixer, a drainage macerator pump and an intelligent control panel, enabling automatic management of mixing, drainage, cleaning and filling phases without manual intervention. An integrated alarm indicates when the maximum grease level is reached. A simple press of the start button is enough to launch the complete maintenance cycle, ensuring performance, user comfort and optimum hygiene.



2-year warranty

See page 9

PRODUCT BENEFITS

- Tank width of 700 mm on sizes 2 and 4 (door passage)
- Rotomoulded polyethylene tank with integrated grease trap
- Angled base for complete drainage
- Odour-proof airtight covers
- Viewing window with wiper for inspection
- Grease level detection alarm integrated in the control panel
- Fully automatic operation (mixing, pumping, cleaning, filling)
- Automatic water filling unit
- Inlets/outlets modifiable on request

DELIVERED AS STANDARD



Inspection window



Filling unit



Mixer



Control panel



Drain pump

OPTIONAL EXTRAS



Sampling device DN100
Barcode: 3308815090740
Product code: 80016
Compatible with sizes 2 and 4



Sampling device DN150
Barcode: 3308815090757
Product code: 80017
Compatible with sizes 7, 10 and 15

TECHNICAL FEATURES

	Sanigrease S 2PA				
Nominal size (NS)	2	4	7	10	15
Material					
Tank	HDPE	HDPE	HDPE	HDPE	HDPE
Hydraulics					
Volume of sludge trap (L)	200	400	700	1000	1500
Volume of separator compartment (L)	450	450	960	1076	1800
Fat volume (L)	80	160	160	400	600
Total volume (L)	650	850	1660	2076	3300
Inlet diameter DN	110	110	160	160	200
Discharge diameter DN	110	110	160	160	200
Identification and logistics					
Barcode	3308815103372	3308815103389	3308815103396	3308815103402	3308815103419
Product code	**80038**	**80039**	**80040**	**80041**	**80042**

DIMENSIONS

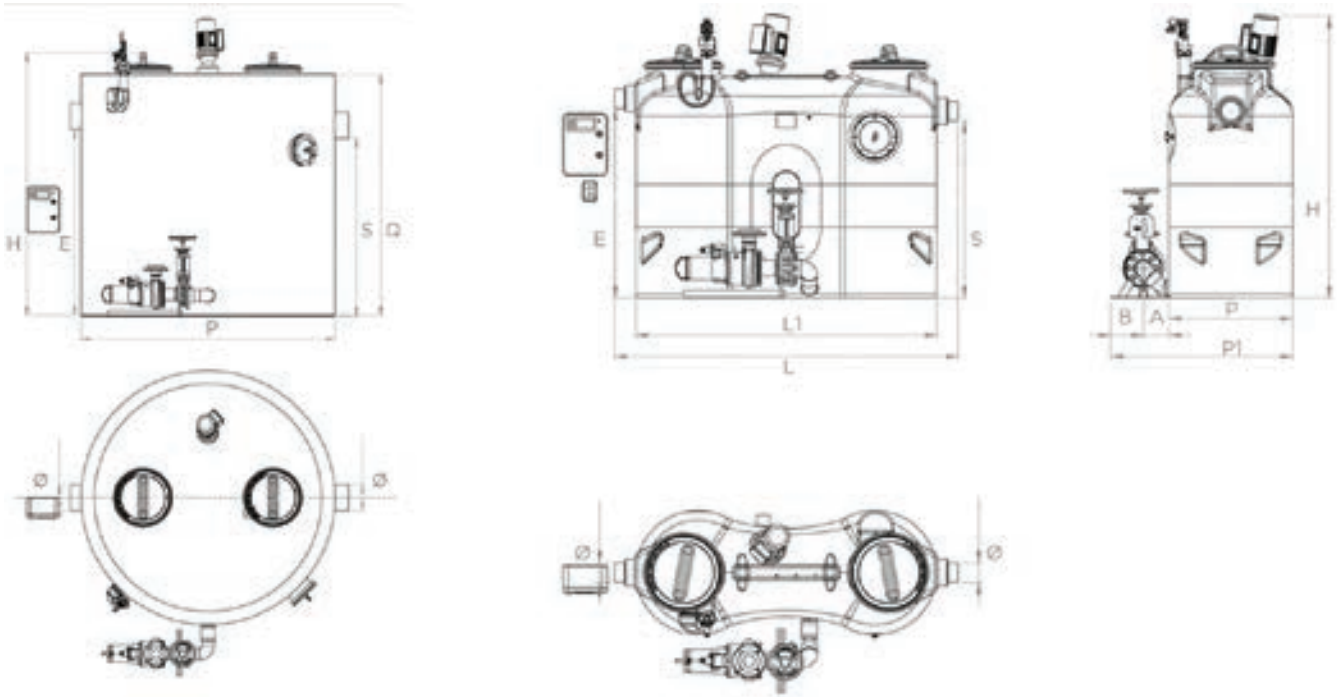

	L1	L	S	E	H	P	P1	A	B	Ø
Sanigrease S 2PA	1700	1940	760	830	1352	700	1027	140	327	110
Sanigrease S 4PA	1700	1940	1000	1070	1592	700	1027	140	327	110
Sanigrease S 7PA	1776	1870	1270	1340	1750	980	1894			160
Sanigrease S 10PA	2356	2485	1270	1340	1750	980	1917			160

	E	H	S	Q	P	Ø
Sanigrease S 15PA	1430	2019	1360	1850	1953	200

Dimensions (mm)

Sanigrease S 680/S 1600

Sanigrease S 680 and S 1600 are fat grease separators designed for commercial kitchens serving up to 440 meals a day. They recover heavy residues thanks to the DN110 inlets and outlets. With a width of only 77.3 cm, they pass easily through a door for easy handling. They are available in versions with a drain column and ventilation. The grease detection alarm box is available as an option. This alarm is equipped with a sensor that detects the high level of grease in the separator compartment and the lack of water in the tank.



2-year warranty

See page 9

PRODUCT BENEFITS

- 77.3 cm wide: easy handling
- Available with ventilation and drain column
- Rotomoulded tank made of recyclable polyethylene
- PVC inlets and outlets DN110
- Seals on lids
- Alarm option

OPTIONAL EXTRAS



Sampling device DN100
Barcode: 3308815090740
Product code: 80016



Sampling device DN150
Barcode: 3308815090757
Product code: 80017



Grease alarm 230V sensor/case
Barcode: 3308815082653
Product code: 80015

TECHNICAL FEATURES

	Sanigrease S 680	Sanigrease S 680C		
Nominal size (NS)	2	2	4	4
Material				
Tank	PE	PE	PE	PE
Hydraulics				
Volume of sludge trap (L)	200	200	400	400
Volume of separator compartment (L)	480	480	1200	1200
Total volume (L)	680	680	1600	1600
Inlet diameter DN	110	110	110	110
Discharge diameter DN	110	110	110	110
Ventilation diameter DN		110		110
Drain diameter DN		80		80
Cable gland diameter DN	50	50	50	50
Identification and logistics				
Barcode	3308815082592	3308815082615	3308815082608	3308815082622
Product code	**80006**	**80007**	**80008**	**80009**

DIMENSIONS

Sanigrease S 680, Sanigrease S 680C

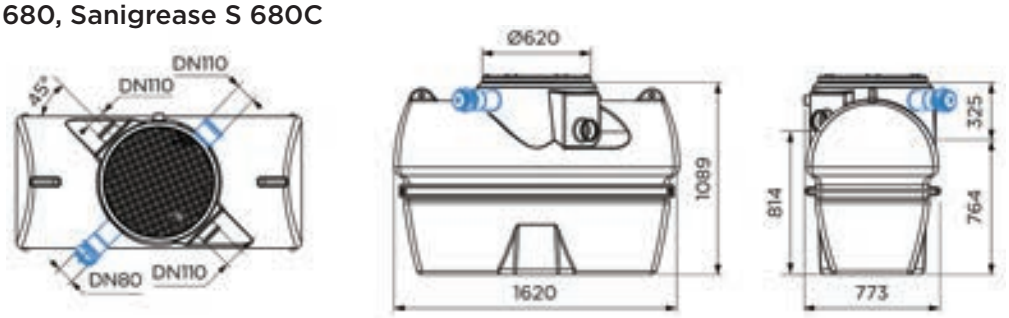

Sanigrease S 1600, Sanigrease S 1600C

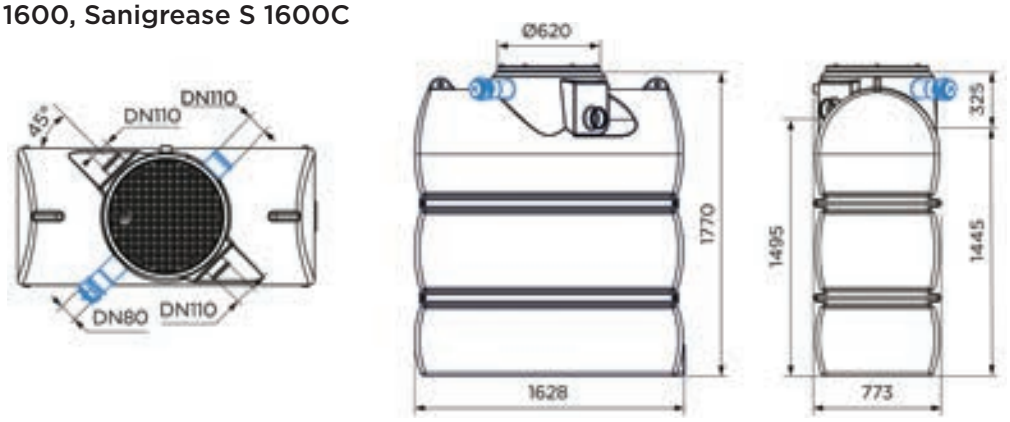

Dimensions (mm)

Sanigrease SU 1/1.5/2/3/4

The Sanigrease SU 1/1.5/2/3/4 are grease separators designed for underground installation. Available in several sizes with a nominal size of 1 to 4 (TN), they are made of recyclable polyethylene using rotational moulding. These models include a grease trap for recovering heavy materials and are equipped with PVC inlet and outlet devices. Finally, the lid, with a waterproof seal for pedestrian access, is secured with stainless steel screws and is made of reinforced composite.



TO BE BURIED

2-year warranty

See page 9

PRODUCT BENEFITS

- DN110 PVC inlets and outlets
- Rotomoulded tank made from recyclable polyethylene
- Stainless steel screws
- Stainless steel alarm mounting hook included
- Gasket with pedestrian cover
- Optional alarm available

OPTIONAL EXTRAS



Grease alarm
230V sensor/case
Barcode: 3308815082653
Product code: 80015

TECHNICAL FEATURES

	Sanigrease SU 1	Sanigrease SU 1.5	Sanigrease SU 2	Sanigrease SU 3	Sanigrease SU 4
Nominal size (NS)	1	1.5	2	3	4
Material					
Tank	PE	PE	PE	PE	PE
Hydraulics					
Volume of sludge trap (L)	100	150	200	300	400
Volume of separator compartment (L)	240	510	490	730	1100
Total volume (L)	340	660	690	1030	1500
Inlet diameter DN	110	110	110	110	110
Discharge diameter DN	110	110	110	110	110
Cable gland diameter DN	50	50	50	50	50
Identification and logistics					
Barcode	3308815084893	3308815084909	3308815084916	3308815084923	3308815084930
Product code	**80010**	**80011**	**80012**	**80013**	**80014**

DIMENSIONS

Sanigrease SU 1

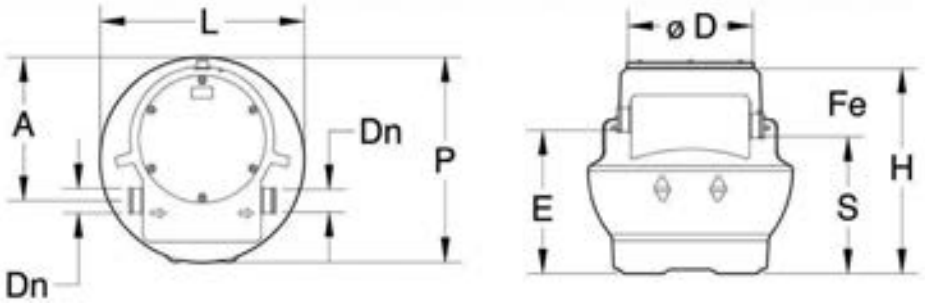

	P	L	H	E	S	FE	DN	A	ø D
Sanigrease SU 1	1000	1000	1000	698	668	332	110	700	620

Sanigrease SU 1.5/2/3/4

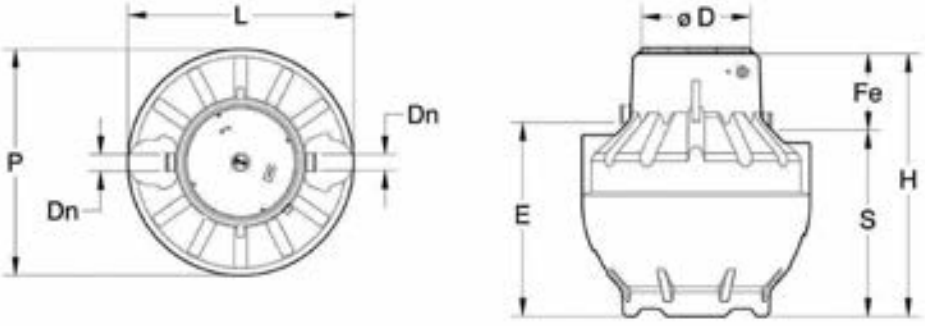

	P	L	H	E	S	FE	DN	ø D
Sanigrease SU 1.5	1200	1200	1230	880	830	400	110	620
Sanigrease SU 2	1250	1250	1230	930	880	350	110	620
Sanigrease SU 3	1200	1200	1540	1240	1190	350	110	620
Sanigrease SU 4	1500	1500	1700	1275	1225	475	110	770

Dimensions (mm)

Sizing a grease separator

Reference	Nominal flow (L/s)	Volume minimum (L)	Fat retention capacity (kg)	Typical type of usage'
TN0.5	0.5	120	20	Small snack bars, cafes, juice bars, small laundromats
TN1	1	200	40	Small kitchens, sandwich shops, food trucks
TN1.5	1.5	300	60	Small communal kitchens, restaurants with up to 40 seats
TN2	2	400	80	Medium-sized restaurants (40-60 seats), brasseries
TN3	3	600	120	Medium-sized restaurants, small hotels (60-100 seats)
TN4	4	800	160	Commercial kitchens, medium-sized company canteens
TN7	7	1500	300	Medium to large restaurants (100-250 seats), medium-sized canteens
TN10	10	3000	600	Large restaurants (250-400 seats), hospitals, large canteens
TN15	15	6000	1200	Very large industrial kitchens, restaurant chains, large canteens

Simplified method for determining the size of the separator based on the number of meals per day

Standard conditions:

- Grease density **< 0.94 g/cm³**
- Waste temperature **< 60°C**
- Average operating time: **8 hours/day**
- For kitchens in continuous operation: **24/7**
- **For specific cases, please contact us**

1. Hotel kitchen

Size (l/s)	1	2	3	4	7	10
Number of meals/day	Up to 40	41 to 96	97 to 135	136 to 180	241 to 350	371 to 440

2. Traditional restaurant cuisine

Size (l/s)	1	2	3	4	7	10
Number of meals/day	Up to 50	51 to 100	101 to 155	156 to 205	286 to 365	431 to 520

3. Catering services (canteen, company restaurant, university restaurant)

Size (l/s)	1	2	3	4	7	10
Number of meals/day	Up to 220	221 to 440	441 to 660	661 to 880	1201 to 1550	1851 to 2210

4. Hospital kitchen

Size (l/s)	1	2	3	4	7	10
Number of meals/day	Up to 70	71 to 145	146 to 220	221 to 295	401 to 510	626 to 730

5. Large kitchen with continuous service (24/7)

Size (l/s)	1	2	3	4	7	10
Number of meals/day	Up to 300	301 to 600	601 to 900	901 to 1200	1651 to 2100	2551 to 3000

CLEAR WATER
RANGE

Since 1958, SFA has been innovating and developing products to solve plumbing and drainage problems. SFA has now developed a new range of products specifically for clear water management.

Our commitment to CSR remains a focus for SFA with the development of this range, to cover all areas of the water cycle, to be sustainable, efficient and responsible for water management.

WASTE WATER

SFA facilitates the discharge of waste water into the sewage network when gravity systems alone are insufficient.



WATER TREATMENT

SFA Enviro provides solutions for treating waste water.



SFA GROUP

CLEAR WATER

Collection of water
Supply of water
Water distribution
Rainwater use.





NEW

SFA WATER SOLUTIONS

To adapt to the different stages of life and to meet the ever changing needs around the house, whether it is a gardening project, or optimal management of clear water, SFA solutions provide efficiency and simplicity.

Our clear water pumps provide reliable water transfer from even the most remote locations – perfect for irrigation systems, draining swimming pools, or removing excess water. Simple to install and highly adaptable, they perform efficiently even in the most challenging environments.

1. STAINLESS STEEL CENTRIFUGAL PUMPS
2. HORIZONTAL MULTI-STAGE CENTRIFUGAL PUMPS
3. SUBMERSIBLE PUMPS
4. UNDERGROUND LIFTING STATIONS





SANIJET

The Sanijet range: self-priming JET pumps, ideal for watering and irrigation needs.

With Sanijet, SFA offers a high-performance range of surface pumps, optimised by a Venturi (JET) system for increased suction.

While conventional surface pumps are often restricted to a 7 metre depth, Sanijet pumps deliver enhanced suction up to 8 metres and feature self priming technology for quick and effortless operation.





Stainless steel centrifugal pumps

	Irrigation	Domestic supply: Flushing toilets, Washing machines, Pool water replenishment	Supply for decorative fountains	Cleaning: Terrace, Car, Indoor floors, Facade, Roof	Draining pools	Pumping Rainwater, Well water, River water, Pond water	Transferring water to a tank
 **Sanijet 4-50** Portable self-priming stainless steel centrifugal pump P.180	•				•	•	•
 **Sanijet 4-50 PC2** Portable self-priming stainless steel centrifugal pump, automatic with press control PC2 P.181	•	•	•	•		•	•
 **Sanijet 4-50 PC3** Portable self-priming stainless steel centrifugal pump, automatic with press control PC3 P.182	•	•	•	•		•	•
 **Sanijet 5-55** Self-priming stainless steel multi-stage centrifugal pump P.183	•					•	•
 **Sanijet 5-55 PC3** Self-priming stainless steel multi-stage centrifugal pump, automatic with press control PC3 P.184	•	•	•	•		•	•

An example of a portable surface pump installed for watering the garden

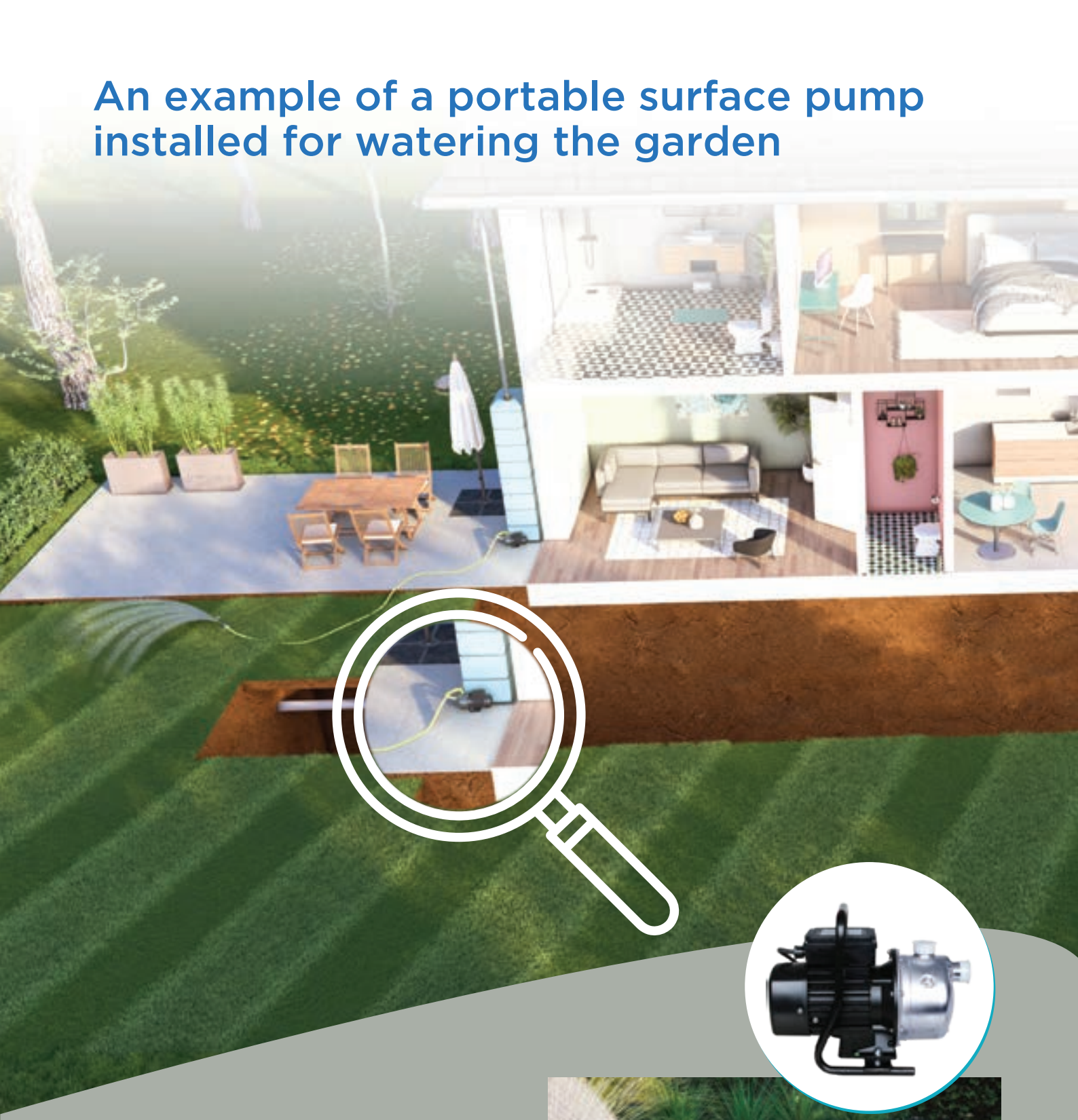

GARDEN IRRIGATION

Reusing rainwater

REQUIREMENT

Water the garden easily using stored water from a tank. Helping to preserve mains water.

SOLUTION

A Sanijet 4-50 was installed near the rainwater collection tank to irrigate the garden without using mains water. An economical and eco-friendly solution!



Sanijet 4-50

Clear water, rainwater

Sanijet 4-50 is a surface jet pump that is perfectly suitable for pumping operations in tanks, shallow wells, or for supplying water to service buildings, gardens, etc. With a maximum flow rate of 3.6 m³/h and a max. head of 50 metres, this pump combines performance and compactness. Convenient, it is equipped with an on/off button and a portable handle.





PERFORMANCE

- Max. Head: 50 m
- Max. flow rate: 3.6 m³/h

PRODUCT BENEFITS

- High suction performance: suction up to 8 metres
- On/off button
- Max. working pressure 8 bar
- Thermal overload protection
- Lifetime lubricated motor bearings
- 1.5 metre cable
- Transport handle included

2-year warranty

See page 9

	Sanijet SJ 4-50
Electrical features	
Voltage (V)	230
Frequency (Hz)	50
Nominal absorbed current (A)	5.2
Power consumption P1 (W)	1000
Power output P2 (W)	750
Revolutions per minute (RPM)	2900
Electrical class	I
Cable length (m)	1.5
IP Rating	IP55
Hydraulics	
Max. Head (m)	50
Max. flow rate (m³/h)	3.6
Suction height (m)	8
Max. operating pressure (bar)	8
Medium (°C)	40
Inlet diameter Ø (in)	1
Discharge diameter Ø (in)	1
Identification and logistics	
Gross weight (kg)	12
Barcode	3308815100265
Product code	**70000**

CURVE

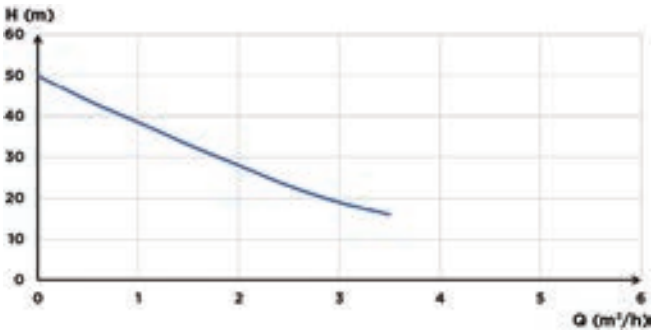

DIMENSIONS

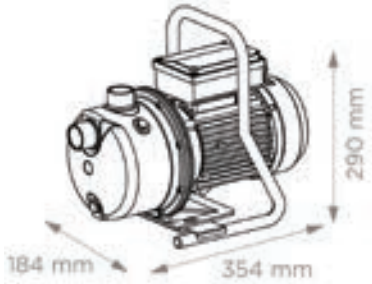

Dimensions (mm)

Sanijet 4-50 PC2

Clear water, rainwater

Sanijet 4-50 PC2 consists of the Sanijet 4-50 pump and the PC2 pressure control. This pump allows for domestic water distribution, irrigation, pumping, and the supply of water without any debris. The PC2 activates the pump as long as there is a demand for water. The built-in pressure gauge allows for monitoring the output pressure. In case of water shortage, the pump stops automatically and 3 automatic restart attempts will be made.



PERFORMANCE

- Max. Head: 50 m
- Max. flow rate: 3.6 m^3/h

PRODUCT BENEFITS

- High suction performance: suction up to 8 metres
- Press control PC2 with automatic switching at 2.4 bar
- On/off button
- Thermal overload protection
- Additional protection against dry running
- Hydraulic shock absorber
- 1.5 metre cable
- Transport handle included

2-year warranty

See page 9

	Sanijet SJ 4-50 PC2
Electrical features	
Voltage (V)	230
Frequency (Hz)	50
Nominal absorbed current (A)	5.2
Power consumption P1 (W)	1000
Power output P2 (W)	750
Revolutions per minute (RPM)	2900
Electrical class	I
Cable length (m)	1.5
IP Rating	IP55
Hydraulics	
Max. Head (m)	50
Max. flow rate (m^3/h)	3.6
Suction height (m)	8
Max. operating pressure (bar)	8
Medium (°C)	40
Inlet diameter Ø (in)	1
Discharge diameter Ø (in)	1
Identification and logistics	
Gross weight (kg)	13.5
Barcode	3308815100272
Product code	**70001**

CURVE

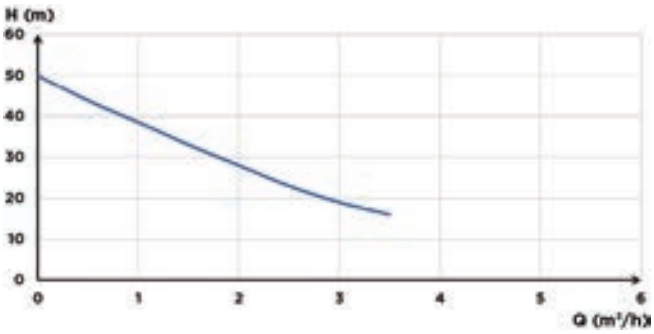

DIMENSIONS

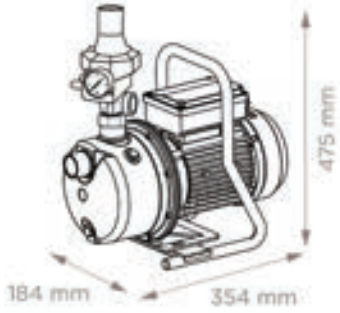

Dimensions (mm)

Sanijet 4-50 PC3

Clear water, rainwater

Sanijet 4-50 PC3 consists of the Sanijet 4-50 pump and the PC3 press control. It enables the distribution of domestic water, irrigation, pumping, and the supply of water without any debris. The integrated pressure gauge allows you to set the pump's starting pressure between 1.5 and 3.5 bar. The PC3 activates the pump when a tap is opened. In case of water shortage, the pump stops automatically and several restart attempts will be made for 24 hours.



PERFORMANCE

- Max. Head: 50 m
- Max. flow rate: 3.6 m^3/h

PRODUCT BENEFITS

- High suction performance: suction up to 8 metres
- Press control PC3 allowing the pressure switch adjustment from 1.5 to 3.5 bar
- On/off button
- Thermal overload protection
- Additional protection against dry running
- Hydraulic shock absorber
- 1.5 metre cable
- Transport handle included

2-year warranty

See page 9

	Sanijet SJ 4-50 PC3
Electrical features	
Voltage (V)	230
Frequency (Hz)	50
Nominal absorbed current (A)	5.2
Power consumption P1 (W)	1000
Power output P2 (W)	750
Revolutions per minute (RPM)	2900
Electrical class	I
Cable length (m)	1.5
IP Rating	IP55
Hydraulics	
Max. Head (m)	50
Max. flow rate (m^3/h)	3.6
Suction height (m)	8
Max. operating pressure (bar)	8
Medium (°C)	40
Inlet diameter Ø (in)	1
Discharge diameter Ø (in)	1
Identification and logistics	
Gross weight (kg)	13.4
Barcode	3308815100289
Product code	**70002**

CURVE

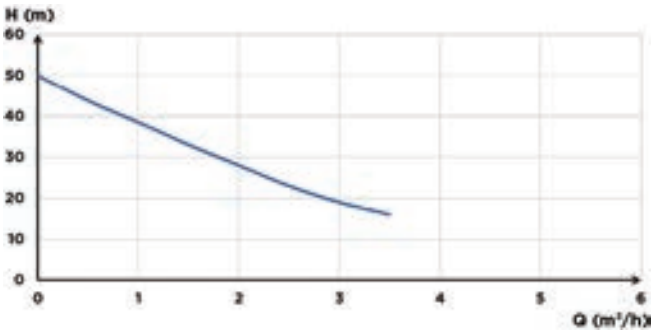

DIMENSIONS

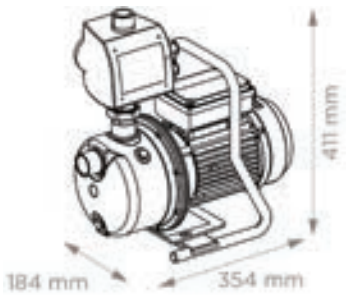

Dimensions (mm)

Sanijet 5-55

Clear water, rainwater

Sanijet 5-55 is a multi-stage jet pump ideal for irrigation, domestic water supply for gardening, wash stations, and the transfer of clear non-aggressive or abrasive water. Its powerful motor combined with its multi-stage hydraulics ensures remarkable performance and quieter operation.





PERFORMANCE

- Max. Head: 55 m
- Max. flow rate: 5 m^3/h

PRODUCT BENEFITS

- High suction performance: suction up to 8 metres
- Multi-stage pump
- Max. service pressure 8 bar
- Thermal overload protection
- 1.5 metre cable
- Quiet activation

2-year warranty

See page 9

	Sanijet SJ 5-55
Electrical features	
Voltage (V)	230
Frequency (Hz)	50
Nominal absorbed current (A)	5.2
Power consumption P1 (W)	1300
Power output P2 (W)	900
Revolutions per minute (RPM)	2850
Electrical class	I
Cable length (m)	1.5
IP Rating	IP55
Hydraulics	
Max. Head (m)	55
Max. flow rate (m^3/h)	5
Suction height (m)	8
Max. operating pressure (bar)	8
Medium (°C)	40
Inlet diameter Ø (in)	1
Discharge diameter Ø (in)	1
Identification and logistics	
Gross weight (kg)	11.5
Barcode	3308815100296
Product code	**70003**

CURVE

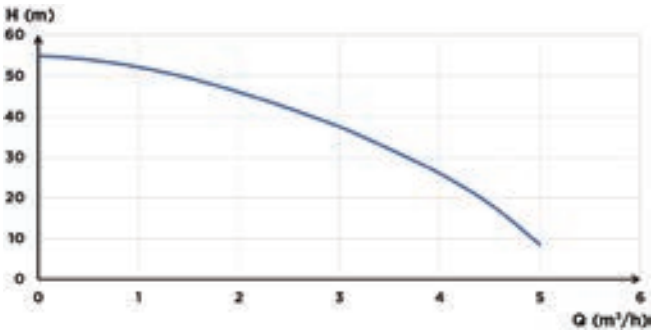

DIMENSIONS

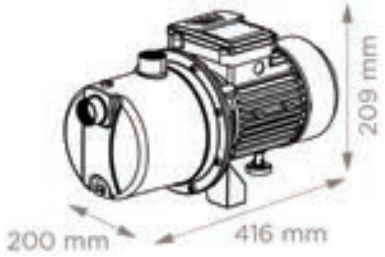

Dimensions (mm)

Sanijet 5-55 PC3

Clear water, rainwater

Sanijet 5-55 PC3 consists of the Sanijet 5-55 multi-stage pump and the PC3 pressure controller. It facilitates domestic water distribution, irrigation, pumping, and water supply without any debris. The integrated control allows the starting pressure of the pump to be adjusted between 1.5 and 3.5 bar. The PC3 activates the pump when a tap is opened. In case of water shortage, the pump automatically stops and several restart attempts will be made over 24 hours. Its multi-stage configuration allows for quieter operation.



PERFORMANCE

- Max. Head: 54 m
- Max. flow rate: 5 m^3/h

PRODUCT BENEFITS

- High suction performance: suction up to 8 metres
- Multi-stage pump
- Thermal overload protection
- Press control PC3 allowing adjustment of the switching pressure from 1.5 to 3.5 bar
- Additional protection against dry running
- Hydraulic shock absorber
- 1.5 metre cable
- Quiet activation

2-year warranty

See page 9

	Sanijet SJ 5-55 PC3
Electrical features	
Voltage (V)	230
Frequency (Hz)	50
Nominal absorbed current (A)	5.2
Power consumption P1 (W)	1300
Power output P2 (W)	900
Revolutions per minute (RPM)	2850
Electrical class	I
Cable length (m)	1.5
IP Rating	IP55
Hydraulics	
Max. Head (m)	54
Max. flow rate (m^3/h)	5
Suction height (m)	8
Max. operating pressure (bar)	8
Medium (°C)	40
Inlet diameter Ø (in)	1
Discharge diameter Ø (in)	1
Identification and logistics	
Gross weight (kg)	14.3
Barcode	3308815100302
Product code	**70004**

CURVE

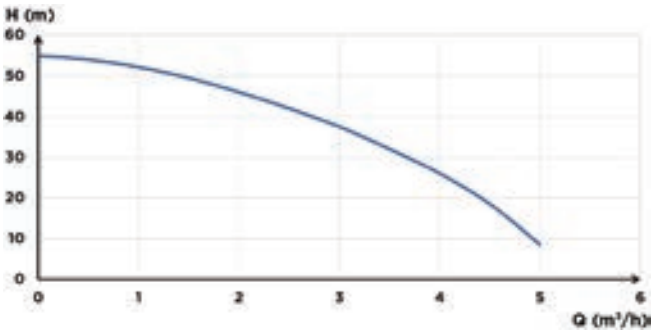

DIMENSIONS

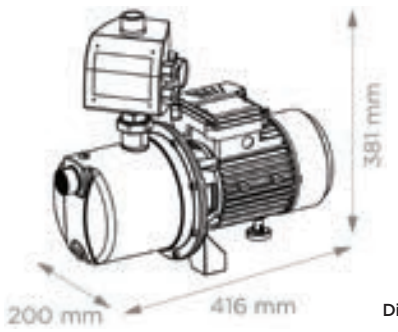

Dimensions (mm)



SANIMHP

SaniMHP: discreet and efficient horizontal multi-stage surface pumps for versatile use with clean water.

With SaniMHP, SFA offers a range of multi-stage surface pumps, ideal for irrigation, rainwater use and pumping water from tanks or ponds etc.

Thanks to an optimised design, these pumps ensure quiet operation and allow suction up to 8 metres, surpassing conventional pumps. **Self-priming, they are easy to start.**

The SaniMHP are available in automatic pump version for on-demand operation.





Horizontal multi-stage centrifugal pumps

	Irrigation	Domestic supply: Flushing toilets, Washing machines, Pool water replenishment	Supply for decorative fountains	Cleaning: Terrace, Car, Indoor floors, Facade, Roof	Pumping Rainwater, Well water, River water, Pond water	Transferring water to a tank
 **SaniMHP 4-40** Horizontal, self-priming, multi-stage centrifugal pump P.187	•				•	•
 **SaniMHP 4-40 PC2** Horizontal, self-priming, automatic multi-stage centrifugal pump with press control PC2 P.188	•	•	•	•	•	•
 **SaniMHP 4-40 PC3** Horizontal, self-priming, automatic multi-stage centrifugal pump with press control PC3 P.189	•	•	•	•	•	•
 **SaniMHP 4-50** Horizontal, self-priming, multi-stage centrifugal pump P.190	•				•	•
 **SaniMHP 4-50 PC3** Horizontal, self-priming, automatic multi-stage centrifugal pump with press control PC3 P.191	•	•	•	•	•	•
 **SaniMHP 6-50** Horizontal, self-priming, multi-stage centrifugal pump P.192	•				•	•
 **SaniMHP 9-50** Horizontal, self-priming, multi-stage centrifugal pump P.193	•				•	•
 **SaniMHP 9-50 PC4** Horizontal, self-priming, automatic multi-stage centrifugal pump with press control PC4 P.194	•	•	•	•	•	•

SaniMHP 4-40

Clear water, rainwater

SaniMHP 4-40 is a horizontal multi-stage centrifugal pump, self-priming and quiet, designed for use with clear water. With a maximum flow rate of 40 m3/h and a maximum head of 40 metres, it is ideal for irrigation, rainwater use, pumping water from tanks, wells or ponds etc. Its optimised design ensures quiet operation and allows for suction up to 8 metres, surpassing traditional pumps.







PERFORMANCE

- Max. Head: 40 m
- Max. flow rate: 4 m^3/h

PRODUCT BENEFITS

- Quiet design suitable for residential environments
- High suction performance: suction capacity up to 8 metres
- Self-priming up to 8 metres
- Versatility: suitable for watering, rainwater and pumping water from tanks, wells or ponds etc.
- Pump with stainless steel shaft and impeller, Noryl® diffuser
- Max pumping height 40 metres

2-year warranty

See page 9

	SaniMHP 4-40
Electrical features	
Voltage (V)	230
Frequency (Hz)	50
Nominal absorbed current (A)	4
Power consumption P1 (W)	900
Power output P2 (W)	700
Revolutions per minute (RPM)	2850
Electrical class	I
Cable length (m)	1.5
IP Rating	IP55
Hydraulics	
Max. Head (m)	40
Max. flow rate (m^3/h)	4
Suction height (m)	8
Max. operating pressure (bar)	9
Medium (°C)	40
Inlet diameter Ø (in)	1
Discharge diameter Ø (in)	1
Identification and logistics	
Gross weight (kg)	12
Barcode	3308815100180
Product code	**70005**

CURVE

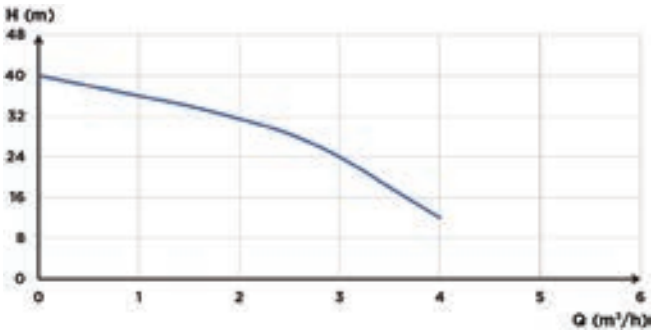

DIMENSIONS

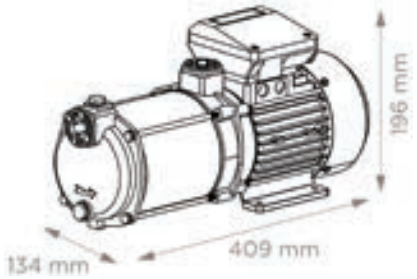

Dimensions (mm)

SaniMHP 4-40 PC2

Clear water, rainwater

SaniMHP 4-40 PC2 consists of the SaniMHP 4-40 and the press control PC2, it combines efficiency and versatility for use with clear water. Its multi-stage design ensures quiet operation and suction up to 8 metres. Thanks to its press control, this pump is ideal for watering and domestic applications such as fountains or sprinklers etc. with automatic activation.



PERFORMANCE

- Max. Head: 40 m
- Max. flow rate: 4 m^3/h

PRODUCT BENEFITS

- High suction performance: suction up to 8 metres
- Automatic activation thanks to the press control PC2
- Quiet design suitable for residential environments
- Pump shut-off in case of water shortage
- Pump with stainless steel shaft and impeller, Noryl® diffuser
- Max pumping height 40 metres

2-year warranty

See page 9

	SaniMHP 4-40 PC2
Electrical features	
Voltage (V)	230
Frequency (Hz)	50
Nominal absorbed current (A)	4
Power consumption P1 (W)	900
Power output P2 (W)	700
Revolutions per minute (RPM)	2850
Electrical class	I
Cable length (m)	1.5
IP Rating	IP55
Hydraulics	
Max. Head (m)	40
Max. flow rate (m^3/h)	4
Suction height (m)	8
Max. operating pressure (bar)	9
Medium (°C)	40
Inlet diameter Ø (in)	1
Discharge diameter Ø (in)	1
Identification and logistics	
Gross weight (kg)	15
Barcode	3308815100197
Product code	**70006**

CURVE

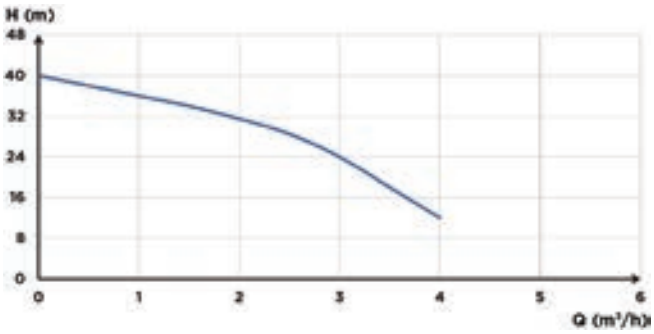

DIMENSIONS

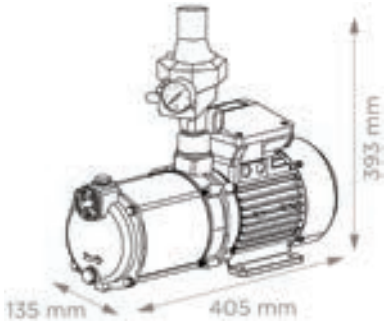

Dimensions (mm)

SaniMHP 4-40 PC3

Clear water, rainwater

SaniMHP 4-40 PC3 combines the performance of a SaniMHP 4-40 multi-stage pump with the flexibility of the press control PC3. It offers advanced automatic management with quiet operation, ensuring optimal suction up to 8 metres. Perfect for irrigation, rainwater, and watering, pumping water from tanks, wells or ponds etc. it adapts to versatile use in clear water.







PERFORMANCE

- Max. Head: 40 m
- Max. flow rate: 4 m^3/h

PRODUCT BENEFITS

- Start-up pressure setting of the pump between 1.5 and 3.5 bar
- Quiet design suitable for residential environments
- High suction performance: suction up to 8 metres
- Automatic activation thanks to press control PC3
- Maximum pumping height of 40 metres
- Pump shut-off in case of water shortage
- Pump with stainless steel shaft and impeller, Noryl® diffuser

2-year warranty

See page 9

	SaniMHP 4-40 PC3
Electrical features	
Voltage (V)	230
Frequency (Hz)	50
Nominal absorbed current (A)	4
Power consumption P1 (W)	900
Power output P2 (W)	700
Revolutions per minute (RPM)	2850
Electrical class	I
Cable length (m)	1.5
IP Rating	IP55
Hydraulics	
Max. Head (m)	40
Max. flow rate (m^3/h)	4
Suction height (m)	8
Max. operating pressure (bar)	9
Medium (°C)	40
Inlet diameter Ø (in)	1
Discharge diameter Ø (in)	1
Identification and logistics	
Gross weight (kg)	12.8
Barcode	3308815100203
Product code	**70007**

CURVE

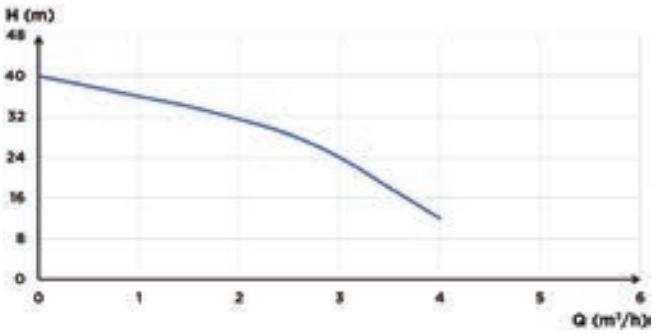

DIMENSIONS

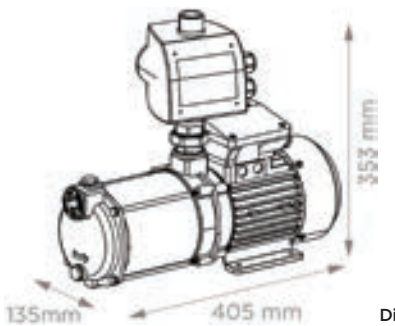

Dimensions (mm)

SaniMHP 4-50

Clear water, rainwater

SaniMHP 4-50 is a horizontal multi-stage centrifugal pump, self-priming and quiet, designed for use with clear water. With a maximum flow rate of 4 m³/h and a maximum head of 50 metres, it is ideal for irrigation, rainwater use, pumping water from tanks, wells or ponds etc. Its optimised design ensures quiet operation and allows for suction up to 8 metres, outperforming conventional pumps.







PERFORMANCE

- Max. Head: 50 m
- Max. flow rate: 4 m³/h

PRODUCT BENEFITS

- Quiet design suitable for residential environments
- High-performance suction: suction capacity up to 8 metres
- Self-priming up to 8 metres
- Versatility of use
- Pump with stainless steel shaft and impeller, Noryl® diffuser
- Max pumping height 50 metres

2-year warranty

See page 9

	SaniMHP 4-50
Electrical features	
Voltage (V)	230
Frequency (Hz)	50
Nominal absorbed current (A)	5
Power consumption P1 (W)	1100
Power output P2 (W)	850
Revolutions per minute (RPM)	2850
Electrical class	I
Cable length (m)	1.5
IP Rating	IP55
Hydraulics	
Max. Head (m)	50
Max. flow rate (m³/h)	4
Suction height (m)	8
Max. operating pressure (bar)	9
Medium (°C)	40
Inlet diameter Ø (in)	1
Discharge diameter Ø (in)	1
Identification and logistics	
Gross weight (kg)	12.8
Barcode	3308815100210
Product code	**70008**

CURVE

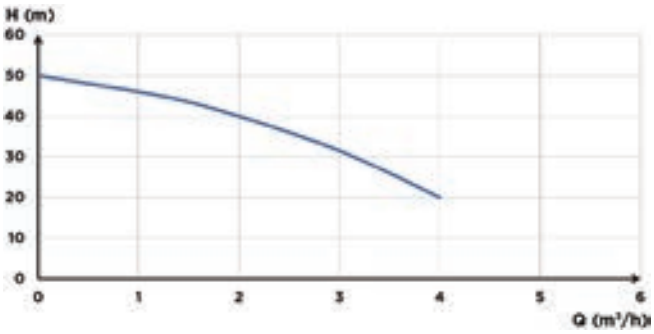

DIMENSIONS

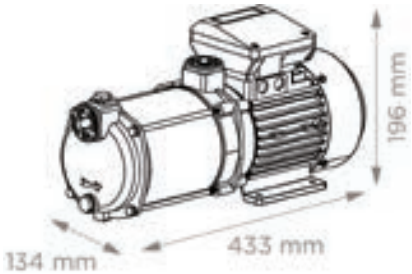

Dimensions (mm)

SaniMHP 4-50 PC3

Clear water, rainwater

SaniMHP 4-50 PC3 consists of the SaniMHP 4-50 and the press control PC3, it combines high performance and flexibility. Designed for use in clear water, it ensures quiet and efficient operation. With a suction up to 8 metres, it is perfect for watering needs, re-use of rainwater, on-demand operation for domestic situations.



PERFORMANCE

- Max. Head: 50 m
- Max. flow rate: 4 m^3/h

PRODUCT BENEFITS

- Starting pressure adjustment of the pump between 1.5 and 3.5 bar
- Quiet design suitable for residential environments
- Self-priming pump up to 8 metres
- Automatic activation thanks to the press control PC3
- Maximum pumping height of 50 metres
- Pump with stainless steel shaft and impeller, Noryl® diffuser

2-year warranty

See page 9

	SaniMHP 4-50 PC3
Electrical features	
Voltage (V)	230
Frequency (Hz)	50
Nominal absorbed current (A)	5
Power consumption P1 (W)	1100
Power output P2 (W)	850
Revolutions per minute (RPM)	2850
Electrical class	I
Cable length (m)	1.5
IP Rating	IP55
Hydraulics	
Max. Head (m)	50
Max. flow rate (m^3/h)	4
Suction height (m)	8
Max. operating pressure (bar)	9
Medium (°C)	40
Inlet diameter Ø (in)	1
Discharge diameter Ø (in)	1
Identification and logistics	
Gross weight (kg)	14.2
Barcode	3308815100227
Product code	**70009**

CURVE

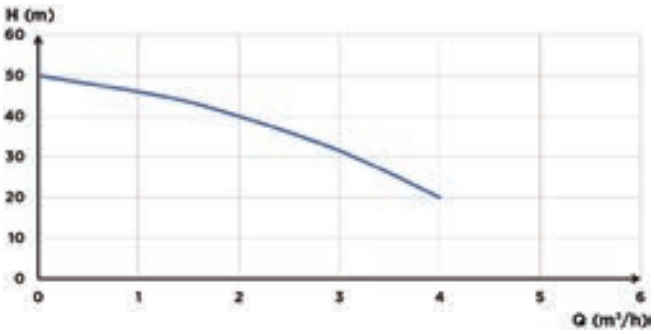

DIMENSIONS

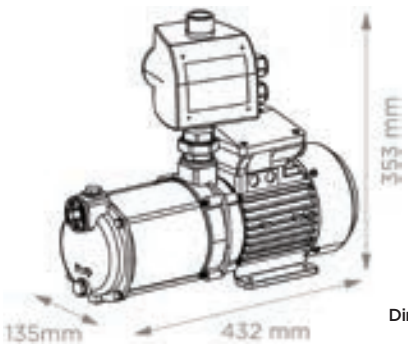

Dimensions (mm)

SaniMHP 6-50

Clear water, rainwater

SaniMHP 6-50 is a horizontal multi-stage pump, self-priming and quiet, designed for use with clear water. With a maximum flow rate of 5.4 m³/h and a head of 52 metres, it is ideal for irrigation, rainwater use, and watering, pumping water from tanks, wells or ponds etc. Easy to install and maintain, it offers a powerful suction up to 8 metres.







PERFORMANCE

- Max. Head: 52 m
- Max. flow rate: 5.4 m³/h

PRODUCT BENEFITS

- High output of 5.4 m³/h for various applications
- High suction performance: suction up to 8 metres
- Quiet design suitable for residential environments
- Ideal for irrigation, water supply and rainwater
- Pump with shaft and stainless steel impeller, Noryl® diffuser
- Max pumping height 52 metres

2-year warranty

See page 9

	SaniMHP 6-50
Electrical features	
Voltage (V)	230
Frequency (Hz)	50
Nominal absorbed current (A)	6.1
Power consumption P1 (W)	1350
Power output P2 (W)	1050
Revolutions per minute (RPM)	2850
Electrical class	I
Cable length (m)	1.5
IP Rating	IP55
Hydraulics	
Max. Head (m)	52
Max. flow rate (m³/h)	5.4
Suction height (m)	8
Max. operating pressure (bar)	12
Medium (°C)	40
Inlet diameter Ø (in)	1
Discharge diameter Ø (in)	1
Identification and logistics	
Gross weight (kg)	13.4
Barcode	3308815100234
Product code	**70010**

CURVE

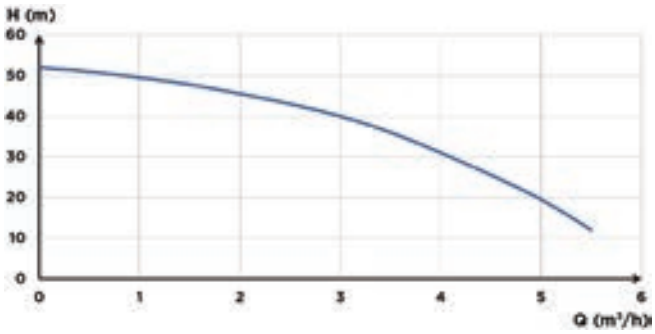

DIMENSIONS

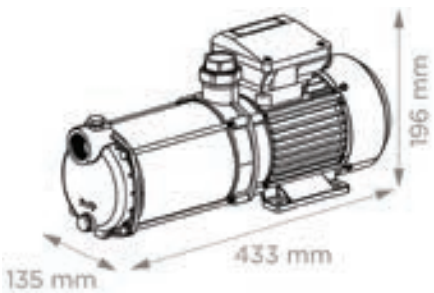

Dimensions (mm)

SaniMHP 9-50

Clear water, rainwater

SaniMHP 9-50 is a horizontal multi-stage pump that offers high performance with a maximum flow rate of 8.7 m^3/h and a pumping height of 50 metres. Self-priming and quiet, it is perfect for domestic homes or light commercial use for clean water, such as irrigation and rainwater recovery. Designed to last, it ensures reliable suction up to 8 metres.





PERFORMANCE

- Max. Head: 50 m
- Max. flow rate: 8.7 m^3/h

PRODUCT BENEFITS

- Maximum flow rate of 8.7 m^3/h for high demands
- High suction performance: suction up to 8 metres
- Robust and durable pump for light commercial use
- Perfect for irrigation and clear water management
- Pump with stainless steel shaft and impeller, Noryl® diffuser
- Max pumping height 50 metres

2-year warranty

See page 9

	SaniMHP 9-50
Electrical features	
Voltage (V)	230
Frequency (Hz)	50
Nominal absorbed current (A)	7.4
Power consumption P1 (W)	1650
Power output P2 (W)	1300
Revolutions per minute (RPM)	2850
Electrical class	I
Cable length (m)	1.5
IP Rating	IP55
Hydraulics	
Max. Head (m)	50
Max. flow rate (m^3/h)	8.7
Suction height (m)	8
Max. operating pressure (bar)	12
Medium (°C)	40
Inlet diameter Ø (in)	1¼
Discharge diameter Ø (in)	1
Identification and logistics	
Gross weight	16.9 kg
Barcode	3308815100241
Product code	**70011**

CURVE

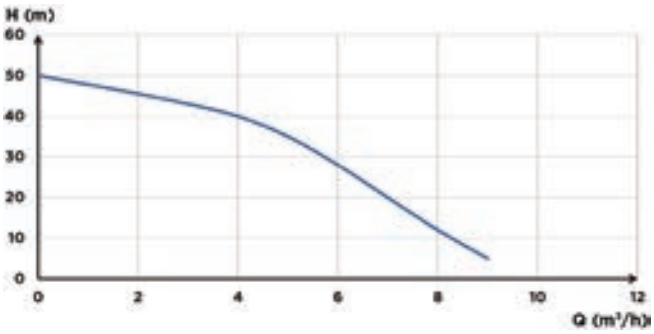

DIMENSIONS

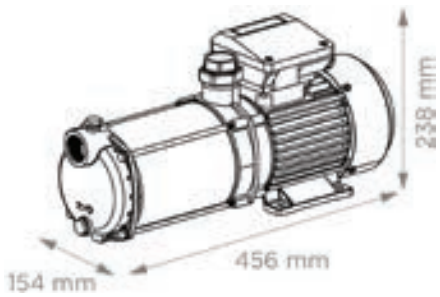

Dimensions (mm)

SaniMHP 9-50 PC4

Clear water, rainwater

SaniMHP 9-50 PC4 is a horizontal multi-stage centrifugal pump, self-priming and quiet with a press control PC4, designed for use with clear water. With a maximum flow rate of 8.7 m^3/h and a head of 50 metres, it is ideal for irrigation, rainwater utilisation and watering, pumping water from tanks, wells or ponds etc. The press control PC4 automatic control system, ensures automatic starting and stopping based on demand, providing efficient and practical water management.







PERFORMANCE

- Max. Head: 50 m
- Max. flow rate: 8.7 m^3/h

PRODUCT BENEFITS

- Automatic management thanks to the high-end press control PC4
- High flow rate of 8.7 m^3/h
- Quiet design suitable for residential environments
- Suitable for irrigation, water supply and rainwater systems
- Pump with stainless steel shaft and impeller, Noryl® diffuser
- Max pumping height 50 metres

2-year warranty

See page 9

	SaniMHP 9-50 PC4
Electrical features	
Voltage (V)	230
Frequency (Hz)	50
Nominal absorbed current (A)	7.4
Power consumption P1 (W)	1650
Power output P2 (W)	1300
Revolutions per minute (RPM)	2850
Electrical class	I
Cable length (m)	1.5
IP Rating	IP55
Hydraulics	
Max. Head (m)	50
Max. flow rate (m^3/h)	8.7
Suction height (m)	8
Max. operating pressure (bar)	12
Medium (°C)	40
Inlet diameter Ø (in)	1
Discharge diameter Ø (in)	1
Identification and logistics	
Gross weight (kg)	19.3
Barcode	3308815100258
Product code	**70012**

CURVE

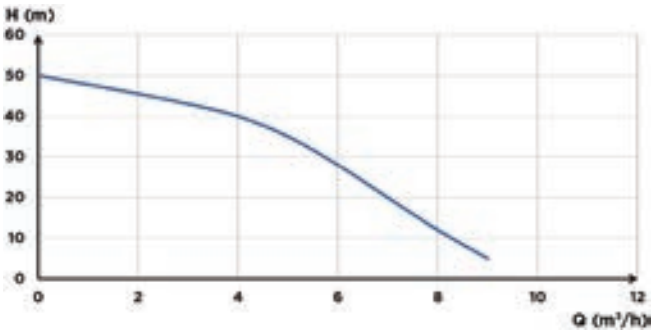

DIMENSIONS

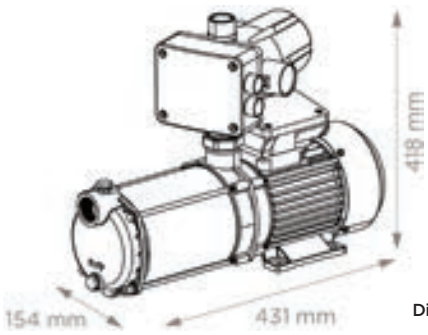

Dimensions (mm)



SANIBOOST

Saniboost: Booster pump ideal for optimised and consistent water supply.

With Saniboost, SFA meets water supply needs by increasing and regulating the pressure of water collected in a tank.

Our boost pumps are great for boosting pressure..

In addition to automatic operation, Saniboost is particularly suited for low-flow consumption, with guaranteed service pressure on drip irrigation installations or automatic flush mechanisms.

The Saniboost booster includes a buffer tank that limits the frequent starts and stops of the pump. This feature extends the lifespan of the equipment and reduces noise disturbances.





Booster pumps

	Irrigation	Domestic supply: Flushing toilets, Washing machines, Pool water replenishment	Supply for decorative fountains	Cleaning: Terrace, Car, Indoor floors, Facade, Roof	Compensation for weak pressure	Pumping Rainwater, Well water, River water, Pond water	Transferring water to a tank
 **Saniboost SJ 4-50** Domestic booster for water supply and irrigation with tank P.197	•	•	•	•	•	•	•
 **Saniboost SJ 5-55 B** Domestic booster for water supply and irrigation with tank P.198	•	•	•	•	•	•	•
 **Saniboost MHP 4-40 B** Domestic booster for water supply and irrigation with tank P.199	•	•	•	•	•	•	•
 **Saniboost Smart** Domestic booster with varying speeds for water supply and irrigation P.200	•	•	•	•	•	•	•

Saniboost SJ 4-50

Clear water, rainwater

Saniboost SJ 4-50 is a booster set consisting of the Sanijet 4-50 pump, the press control PC5, and a 20 L bladder tank. It is suitable for rainwater collection systems, irrigation, pressure boosting, and pumping clear water without any debris. With a max. flow rate of 3.6 m^3/h and a max. head of 50 metres, this booster set combines performance and robustness for household use.



PERFORMANCE

- Max. Head: 50 m
- Max. flow rate: 3.6 m^3/h

PRODUCT BENEFITS

- Self-priming pump
- 20 L bladder tank limiting the systematic activation of the pump and facilitating low-flow use
- Painted steel tank
- Digital press control for automatic operation
- Adjustment of starting and stopping pressures
- Protection settings
- Fast cycle protection
- Dry run protection

2-year warranty

See page 9

	Saniboost SJ 4-50
Tank volume (L)	20
Electrical features	
Voltage (V)	230
Frequency (Hz)	50
Nominal absorbed current (A)	5.2
Power consumption P1 (W)	1000
Power output P2 (W)	750
Revolutions per minute (RPM)	2900
Electrical class	I
Cable length (m)	1.5
IP Rating	IP55
Hydraulics	
Max. Head (m)	50
Max. flow rate (m^3/h)	3.6
Suction height (m)	8
Max. operating pressure (bar)	8
Medium (°C)	40
Inlet diameter Ø (in)	1
Discharge diameter Ø (in)	1
Identification and logistics	
Gross weight (kg)	20.1
Barcode	3308815100319
Product code	**70014**

CURVE

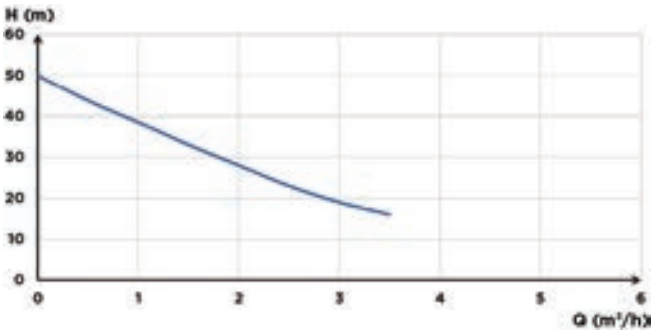

DIMENSIONS

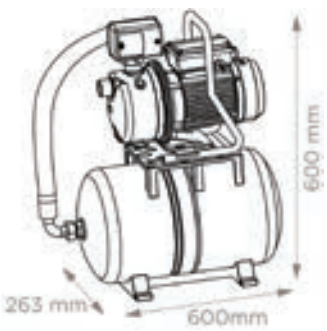

Dimensions (mm)

Saniboost SJ 5-55 B

Clear water, rainwater

Saniboost SJ 5-55 B is a booster set consisting of the Sanijet 5-55 multi-stage pump, the press control PC5, and a 20 L diaphragm tank. It is suitable for rainwater harvesting systems, irrigation, pressure boosting, and the pumping of clear water without any debris. With a max. flow rate of 5 m^3/h and a max. head of 55 metres, this booster set offers high performance and durability.



PERFORMANCE

- Max. Head: 54 m
- Max. flow rate: 5 m^3/h

PRODUCT BENEFITS

- Self-priming multi-stage pump
- 20 L diaphragm tank maintenance-free allowing low flow rate use
- Tank with resistant epoxy coating®
- Digital press control for automatic operation
- Adjustment of starting and stopping pressures
- Protection settings
- Fast cycle protection
- Dry running protection
- Quiet operation

2-year warranty

See page 9

	Saniboost SJ 5-55 B
Tank volume (L)	20
Electrical features	
Voltage (V)	230
Frequency (Hz)	50
Nominal absorbed current (A)	5.2
Power consumption P1 (W)	1300
Power output P2 (W)	900
Revolutions per minute (RPM)	2850
Electrical class	I
Cable length (m)	1.5
IP Rating	IP55
Hydraulics	
Max. Head (m)	54
Max. flow rate (m^3/h)	5
Suction height (m)	8
Max. operating pressure (bar)	8
Medium (°C)	40
Inlet diameter Ø (in)	1
Discharge diameter Ø (in)	1
Identification and logistics	
Gross weight (kg)	19.9
Barcode	3308815100333
Product code	**70015**

CURVE

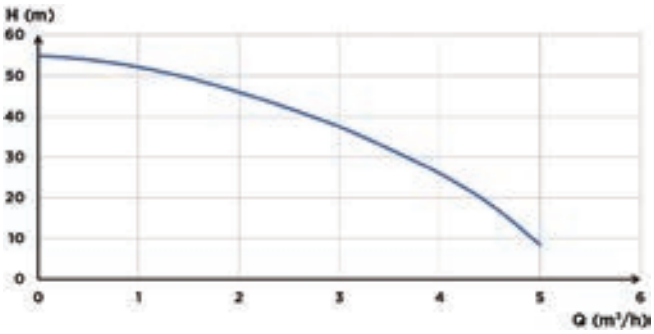

DIMENSIONS

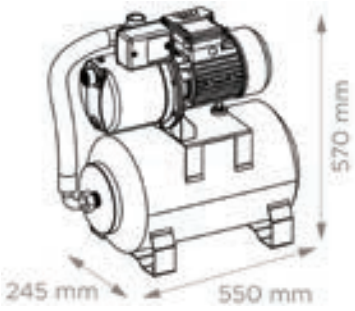

Dimensions (mm)

Saniboost MHP 4-40 B

Clear water, rainwater

Saniboost MHP 4-40 B is a booster set consisting of the MHP 4-40 B multi-stage pump, the press control PC5, and a 20 L diaphragm tank. It is suitable for rainwater harvesting systems, irrigation, pressure boosting, and the pumping of clear water without any debris. With a max. flow rate of 4 m^3/h and a max. head of 40 metres, this booster set is one of our most efficient, robust, and quiet models.



PERFORMANCE

- Max. Head: 40 m
- Max. flow rate: 4 m^3/h

PRODUCT BENEFITS

- Self-priming multi-stage pump
- 20 L diaphragm tank maintenance-free allowing low flow rate use
- Tank with resistant epoxy® coating
- Digital press control for automatic operation
- Ability to set switching on off pressures
- Protection settings
- Fast cycle protection
- Dry running protection
- Quiet operation

2-year warranty

See page 9

	Saniboost MHP 4-40 B
Tank volume (L)	20
Electrical features	
Voltage (V)	230
Frequency (Hz)	50
Nominal absorbed current (A)	4
Power consumption P1 (W)	900
Power output P2 (W)	700
Revolutions per minute (RPM)	2850
Electrical class	I
Cable length (m)	1.5
IP Rating	IP55
Hydraulics	
Max. Head (m)	40
Max. flow rate (m^3/h)	4
Suction height (m)	8
Max. operating pressure (bar)	9
Medium (°C)	40
Inlet diameter Ø (in)	1
Discharge diameter Ø (in)	1
Identification and logistics	
Gross weight (kg)	17.8
EAN code	3308815100326
Product code	**70013**

CURVE

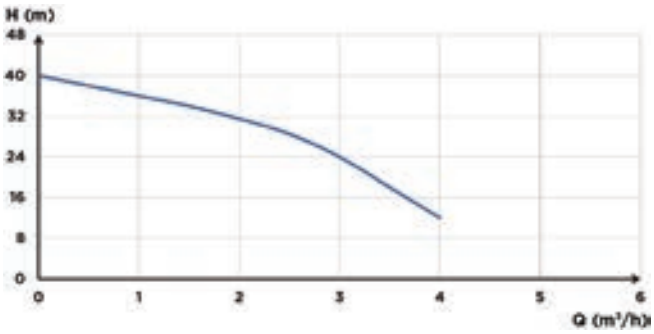

DIMENSIONS

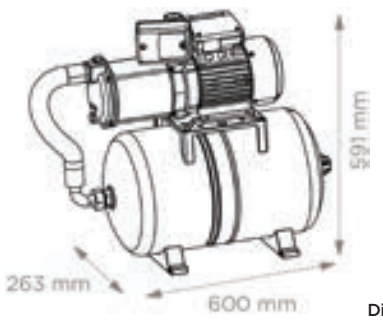

Dimensions (mm)

Saniboost Smart

Clear water, rainwater

Saniboost Smart has been developed to complement the Saniflo Clear Water range of pumps. Saniboost Smart is a product that delivers high pressure and flow rates and is suitable for mains-fed systems. It can also be the solution to restrictive pipes or poor mains water pressure (typically lead mains). It is perfect for a large detached dwelling with several floors and bathrooms or flats. However, it can be used for smaller dwellings if space is available. Saniboost Smart is a variable-speed pump. It will increase both pressure and flow, delivering up to 5.5 bar and a maximum flow rate of 5.2 m^3/h to all outlets in the household. This pump not only achieves high performance but is also a compact design, quiet operation <50 dB(A), and the possibility of higher pressure. This pump has been designed to be used in conjunction with a cold-water storage tank.



PERFORMANCE

- Max. Head: 56 m
- Max. flow rate: 5.2 m^3/h

PRODUCT BENEFITS

- Multi-stage pump
- Brushless technology allowing up to 50% consumption reduction compared to a single-phase motor
- Variable operation avoiding rapid cycles
- Output pressure adjustment from 1.5 to 5.5 bar
- Dry run protection
- Inlet/outlet non-return valves included
- Quiet in operation <50dB(A)
- WRAS certification

2-year warranty

See page 9

	Saniboost Smart
Electrical features	
Voltage (V)	160-260
Frequency (Hz)	50-60
Power consumption P1 (W)	750
Electrical class	I
Cable length (m)	1
IP Rating	IPX4
Hydraulics	
Max. Head (m)	56
Max. flow rate (m^3/h)	5.2
Suction height (m)	4
Max. operating pressure (bar)	6.5
Medium (°C)	60
Inlet diameter Ø (in)	1
Discharge diameter Ø (in)	1
Identification and logistics	
Gross weight (kg)	10.6
Barcode	3308815100340
Product code	**70016**

CURVE

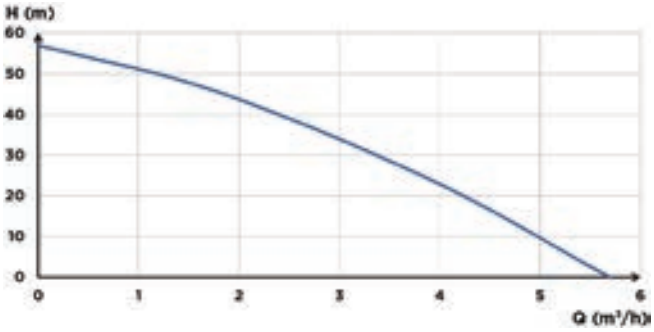

DIMENSIONS

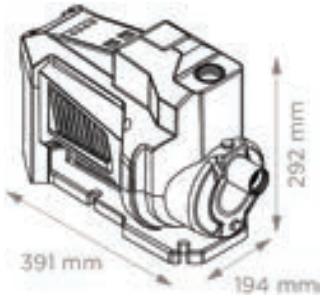

Dimensions (mm)

Press control

SFA pressure switches provide automatic and reliable management of clear water pumps, whether they are booster pumps or automatic pumps. Associated with a pump and in certain cases with a booster tank, they control the starting and stopping of the pump according to the pressure of the circuit. These devices protect installations in the event of a lack of water or rapid cycles, guaranteeing safe operation and increased longevity. Available in several versions, they adapt to different needs.

PRODUCT BENEFITS

- Constant performance: maintaining appropriate pressure for optimal use
- Durability: robust design for intensive and long-lasting use
- Enhanced safety: cushioning of water hammer and prevention of rapid cycling
- Integrated protection: automatic shut-off in case of water shortage

PRESS CONTROLS FOR BOOSTER/MANDATORY BOOSTER TANK



Press control PC5 3308815100944 **70021**



Press control PC6 3308815100951 **70022**

PRESS CONTROLS FOR PUMP: OPTIONAL SURGE TANK



Press control PC1 3308815100906 **70017**



Press control PC2 3308815100913 **70018**



Press control PC3 3308815100920 **70019**



Press control PC4 3308815100937 **70020**

Pressure switches for pump

	PC1	PC2	PC3	PC4
Pressure display	Analog (bar)	Analog (bar)	Analog (bar)	Digital (bar/psi)
Restart after dry-running shutdown	Manual only	3 attempts in 2 minutes	Attempts on 24 hours	Configurable up to 24 hours
Starting Pressure	Fixed 1.5 bar	Fixed 2.4 bar	Adjustable - screw 1.5 - 3.5 bar	Adjustable - digital 0.5 - 4 bar
Stop Flow	0.5 L/min	0.5 L/min	1.5 L/min	0.5 L/min
Maximum Pump Current	10 A	10 A	10 A	16 A
Maximum Pressure	10 bar	10 bar	10 bar	8 bar

Pressure switches for booster pump

	PC5	PC6
Pressure Display	Digital (psi-bar)	Digital (psi-bar)
Dry-Running Detection	Pressure (configurable)	Pressure (configurable)
Restart after Dry-Running Shutdown	Attempts over 24 hours	Attempts over 24 hours
Rapid Cycle Detection	Configurable	Configurable
Starting Pressure	0.5-7 bar	0.5-7 bar
Stopping Pressure	1-8 bar	1-8 bar
Current Display	No	Yes
Overload Detection	No	Yes
BMS Alarm Relay	No	Yes
Maximum Current	16A	16A
Maximum Pressure	8 bar	8 bar

Tanks



Steel tank
Delivered with 5-way connector and hose



Stainless steel tank
Delivered with 5-way connector and hose



Epoxy®-coated tank
Delivered with 5-way connector and hose

Product	EAN Code	Product Code	Equipment Type
20 L Steel Tank	3308815100975	**70023**	Bladder tank
60 L Steel Tank	3308815100982	**70024**	Bladder tank
20 L Stainless Steel Tank	3308815100999	**70025**	Bladder tank
50 L Stainless Steel Tank	3308815101002	**70026**	Bladder tank
20 L Epoxy® Coated Tank	3308815101019	**70027**	Diaphragm tank
60 L Epoxy® Coated Tank	3308815101026	**70028**	Diaphragm tank

Pressure gauges



Axial Pressure Gauge 0-6 bar



0-6 Radial Pressure Gauge

Product	EAN Code	Product Code
0-6 Radial Pressure Gauge	3308815101057	**70029**
Axial Pressure Gauge 0-6 bar	3308815101064	**70030**

Connectors



3-Piece Threaded Connector M/F 1”



5-Way Brass Connector 1”

Product	EAN Code	Product Code
3-Piece Threaded Connector M/F 1”	3308815100968	**70031**
5-Way Brass Connector 1”	3308815101033	**70032**



SFA Saniflo UK Limited
Unit 2, Watford Logistics Hub, 1 Clive Way,
Watford, Hertfordshire WD24 4PX

sfasaniflo.co.uk

Tel: **+44 (0)20 8842 0033**

SFA Saniflo

Pumps, Macerators & Lifting Stations brochure. SFA Saniflo UK Limited reserves the right to make modifications. Photos, text and images are non-binding. 07/26 BROCH-0001-2026