AKW®
Life Made Better

PRODUCT CATALOGUE **2024**

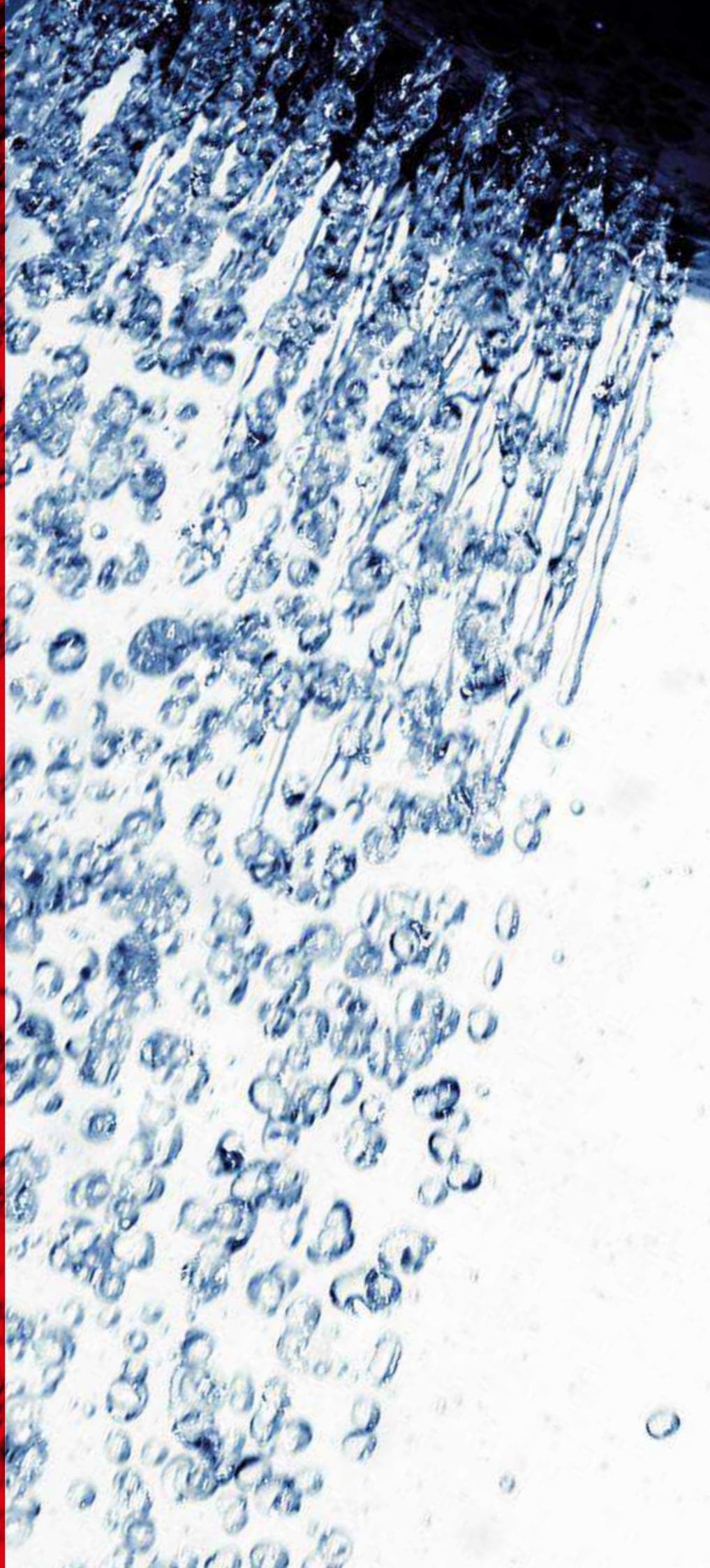

Showering & Bathing

AKW® ONE

ONE SUPPLIER

You can now buy everything you need to complete your installation from AKW, saving you time and money – no need to drive to multiple suppliers – as well as reduced administration

ONE Delivery

Dedicated nationwide transport including next day delivery options

ONE Design

National Surveying Service – makes specifying and ordering easier

ONE Price

No additional costs to customer (time, fuel, and vehicle wear and tear)

ONE Stock

Large stockholding with recent warehouse extension for increased capacity

ONE Install

One delivery equals time saved. You could be completing 4 extra installs every year!

+

Number **ONE** for Technical After Sales Support

+

Number **ONE** for Lifetime Guarantees

+

Number **ONE** for Service

+

Number **ONE** for Surveyors and Maintenance Engineers

+

Number **ONE** for Maintaining Individuals Independence

+

Number **ONE** for Accessible Kitchens

+

Number **ONE** for Bathroom Adaptations

+

Number **ONE** for Product Development

12 REASONS WHY

At AKW we are passionate about supporting independent living with superior quality products that are practical, safe, beautifully designed and which improve quality of life by creating stylish living spaces.

With over 35 years' experience in inclusive design, our name is synonymous with innovative design, easy installation, high quality and safety.

As an established international organisation, we are constantly striving to improve our already exceptional levels of Customer Service and continuously developing the most extensive product range in the UK to make your life as a specifier, installer or customer easier, cementing our position as market leaders. AKW employ over 260 staff globally who are all highly trained in their field to best assist you, all of whom share in the principles below.

1 24/7 ONLINE ORDERING

Via computer, tablet or mobile at orders.akw-ltd.co.uk

Generate your own personal account quotes online

Select delivery date or click and collect

EDI solutions available

2 HELPFUL & FRIENDLY CUSTOMER SERVICE TEAM

UK-based team of over 30

3 dedicated regional teams

Quick call answering

No quibble product replacement policy (subject to T&Cs)

3 EXTENSIVE STOCK LEVELS

ISO9001:2015 certification

Orders received before 12pm can be shipped for next day delivery

4000+ stocked product lines

Same-day trade counter collection available

Over 44 experienced warehouse staff

Our three national distribution warehouses cover over 3.5 million cubic feet

4 BESPOKE NATIONWIDE DELIVERY SERVICE

30+ Dedicated fleet of over delivery vehicles

Delivery schedules to suit customer requirements

5 National distribution hubs delivering products direct to our customers

OVER 100,000 deliveries annually with over 98% delivered on time in full

Tailored delivery service unique to AKW's requirements

5 DEDICATED SURVEYING SERVICE

AKW has a specialist surveying team covering the UK mainland

Surveyors carry photo ID cards with braille and wear AKW branded work wear for clear identification

Computer-aided drawings provided, 2D for bathrooms and 3D for kitchens

6 PRODUCT DEVELOPMENT

Market leader in product research, design, and development

5% Turnover invested in product development every year

Over 90% of products designed and developed in house

Devoted to listening to market needs and working with leading UK OTs and specialist organisations such as RNIB, Stirling & Salford universities

Solutions for customers with dementia & visual impairment

Ranges specifically designed for care and nursing homes

7 A TAILORED SALES APPROACH

3 External regional teams covering the UK

Enabling personalised account management

8 SHOWROOM & TRAINING CENTRE

2300 sqft showroom and training facility

Use of facilities to our customers for training days and meetings

Wide range of products on permanent display in room sets

9 SOCIAL & ENVIRONMENTAL RESPONSIBILITY

Proactively committed to reducing our carbon emissions

Project in place to reduce plastic packaging

Awarded the Ecovadis Silver Medal for Sustainable Business Initiatives

Charity partnerships established with commitment to sustainable social change

Employee volunteering scheme to support our communities

10 MARKETING SUPPORT

Bespoke customer brochures

We can assist with images of our products for your own literature and websites

11 AFTER SALES – TECHNICAL SUPPORT AND MAINTENANCE

Dedicated team of technical advisors providing expert knowledge and advice

Nationwide team of maintenance engineers with decades of experience

We aim to visit within three working days for a maintenance call, from receipt of full information

12 COMMITMENT AND GUARANTEES

All AKW products are designed, tested and certified to all current standards

We are committed to regulatory compliance, product safety and environmental efficiency

AKW offer **lifetime warranties** on many of our products

Two DSDC dementia friendly accredited product ranges

ISO9001:2015 (Quality), ISO14001:2015 (Environmental), ISO45001:2018 (H & S), FSC and PEFC certified

AKW® Life Made Better

www.akw-ltd.co.uk
orders.akw-ltd.co.uk

Email: sales@akw-ltd.co.uk
Phone: 01905 823298
Fax: 01905 823297

AKW® ONE

One Supplier.
One Delivery.
One Design.
One Price.
One Stock

From a small Worcestershire business, AKW has grown to become the UK's market-leader and an international operation.

CONTENTS

INTRODUCTION

12 Reasons Why	4
Company History	10
Quick Page Finder	13
About AKW	16
How this book works	18
Icons	19
Choosing the right products	20
Placing an order	22
Customer Services	23
Surveying excellence	24
Delivery	25
Here to help	26
Regulation & compliance	27

WET ROOMS 29

Wet Room Formers	31
Tanking Kits & Accessories	62

SHOWER TRAYS 67

Braddan Trays	69
Sulby Trays	77
Sulby 2	80
Swift Trays	87
Eagle TWO Trays	91
Low Profile Trays	95
Onyx / Onyx Exclusif Trays	101
Onyx Linea	101

WASTE SYSTEMS 111

Wastes & Pumps	**113**
Compatibility guide	114
Gravity Wastes	118
Waste Adaptors	127
Dry Wastes	129
Pumped Wastes	132
Digital Waste Pumps	140
Sanipro Macerator	148

SHOWER SCREENS & ENCLOSURES 151

Shower Screens	151
Shower Cubicles	245

SHOWERS 267

Electric Showers	269
Mixer Showers	283

WALLS & SAFETY FLOORING 299

Tiles & Accessories	301
Wall Panels	309
Safety Flooring	321

MOBILITY SUPPORT 329

Grab Rails	331
Shower Seats	359
Mobility Ramps	383

BEAUTIFUL BATHROOMS 387

Steel single ended bath	390
Bath panels	392
Bath shower screens	394
Bath shower kits	396
Bath taps	398

SANITARYWARE & BRASSWARE 407

Wash & Dry Toilets & Bidets	409
Sanitaryware	435
Brassware	473
Doc M	485
Walk-In & Assistive Baths	510

BATHROOM FURNITURE & ACCESSORIES 515

Furniture	516
Bathroom Accessories	525

HEATING & ELECTRICAL 531

Safety Heating	532
Bathroom Lights	536
Extractor Fans	542

PLUMBING FITTINGS 545

Metal Fittings	546
Plastic Fittings	550
Solvent Weld Fittings	554

CONTACT & INFORMATION 556

Contact us	556
Visit AKW	558
General Product Information	562
Legal Information	562
Terms & Conditions	563

Company History

1959

Established by Frank Hickson as Contour Doors originally manufacturing high quality sliding door equipment

1982

AKW Medi-Care Ltd. started by Anthony Keith Webb (A.K.W) Three Springs Industrial Estate, Worcester, UK

1983

Contour expanded production took another turn in 1983 with the manufacture of shower enclosures and bath screens

1990s

Manufacturing of trays set up internally DLP, Isle of Man

1994

Contour Doors changed its name to Contour Showers Ltd. and specialised in the manufacturing of shower trays and enclosures for the elderly and disabled market

1995

Company moves to larger premises Hylton Road, Worcester, UK.
Office Staff: 6
Sales Team: 3

Contour Showers Ltd. begin manufacturing screens for AKW

1996

Manufacturing of kitchens begins in Dudley, UK Suitable for wheelchair users

1998

AKW launch sub company Trays Direct to offer a more contractor based range

Manufacturing of screens set up internally DLP, Isle of Man

2000

Office Staff: 10
Sales Team: 6

Contour Showers Ltd. dedicated shower tray manufacturing facility opens in Longton, Stoke-on-Trent

2002

Manufacturing of shower seats & grab rails commences AKW daily living products range

Swift and Eagle level access shower trays utilising TRUESEAL2 floor edging profile are launched, revolutionising the company's level access shower tray range

2005

3D design service launched to assist OT's, Specifiers and Contractors to review bathroom adaptation proposals prior to commencing work

2006

AKW launch Level Best Wet Room showering system

A management buy-in during saw a new management team backed by private equity firm MST Capital

Release the quiet and reliable P12 Shower waste Pump, which to date is still the only peristaltic shower waste pump available

2008

ECI financed the buyout of AKW Medi-Care Ltd. in 2008 when it acquired a majority stake from the two founders

Range of Prinia 110mm high showers trays introduced, ideal for unbreachable floors which cannot be excavated when installing

2009

AKW launch Sanitaryware range including wash basins, hand dryers, toilets & taps

AKW launch Doc M Packs Wheelchair accessible unisex toilet facilities

2010

AKW acquire additional premises Independence House, Hampton Lovett, Droitwich Spa, UK

AKW launch Luda intelligent electric shower

2011

AKW showroom opens

Launch of stylish product ranges

Kitchens manufacturing brought in-house DLP, Isle of Man

2013

New logistics operation providing dedicated delivery service with fleet of AKW branded delivery vehicles

2014

AKW release guide to creating Dementia-friendly bathrooms

Awarded certification as an ISO 9001 Quality Management Standard compliant organisation.

2015

Launch of AKW Electric Showers AKW SmartCare Plus, iTherm and iSure

Launch of AKW Wet Rooms DuraForm, SureForm and TriForm®

Total employees: 250+

Development of the ShowerDec® range of wetroom formers, positioning ShowerDec® as a best in class wetroom product

2018

Contour Showers Ltd. launch the Opulence range of half height glass shower doors and bifold stable door enclosures

2019

Contour Showers Ltd. celebrates 60th anniversary

2022

Contour Showers Ltd. acquired and becomes part of **AKW Holdings Group**

Life Made Better

AKW

Showering Products
Quick Page Finder

Bathroom Products
Quick Page Finder

About AKW

The AKW story began in 1982 after one of our founders had been trying to find a shower tray to meet his mother's needs without success, so he produced and patented one of his own design. Since then, AKW has become an international business and the UK's leading manufacturer of accessible bathrooms, kitchens, and daily living products.

- **1 million+ satisfied customers**
- **150+ trained staff**
- **World-class manufacturing facilities**
- **Dedicated 30+ vehicle fleet providing door-to-door service**
- **Three national distribution warehouses covering over 3.5 million cubic feet**
- **30+ sales and surveying experts nationwide**

A wide variety of products, competitive pricing and first-class customer service make AKW the brand of choice for clients across the UK and abroad.

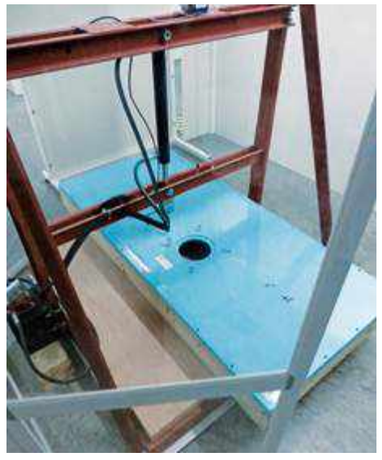

Life Made Better

'Made Better' is a phrase that runs through everything we do at AKW.

It's in finding ways to make someone's quality of life better through independent living solutions or improving our already exceptional levels of customer service.

It's in the superior quality and reliability of our products, many of which have a 'made for life' warranty that we're constantly striving to make even better.

It's in making sure that all our deliveries arrive in full and on time and improving on the most extensive product range in the UK to make your life easier as a specifier, installer or customer.

No matter how hard we push ourselves, we keep going, because we believe life can always be 'made better'.

How this book works

This product catalogue provides extensive detail about the products that are currently available from AKW, and contains all the essential features and benefits, product codes, ordering and technical information you will need.

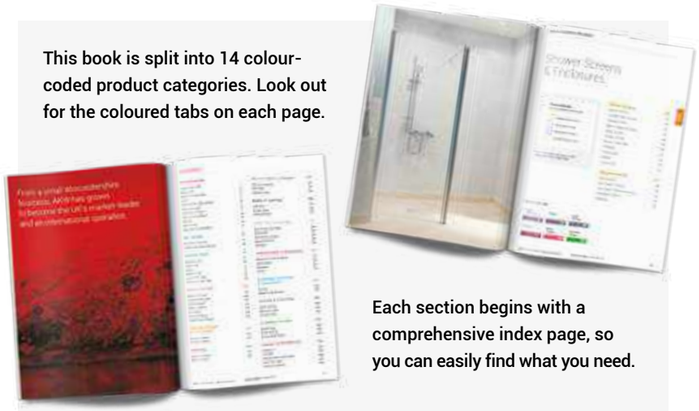

PRODUCT PAGES

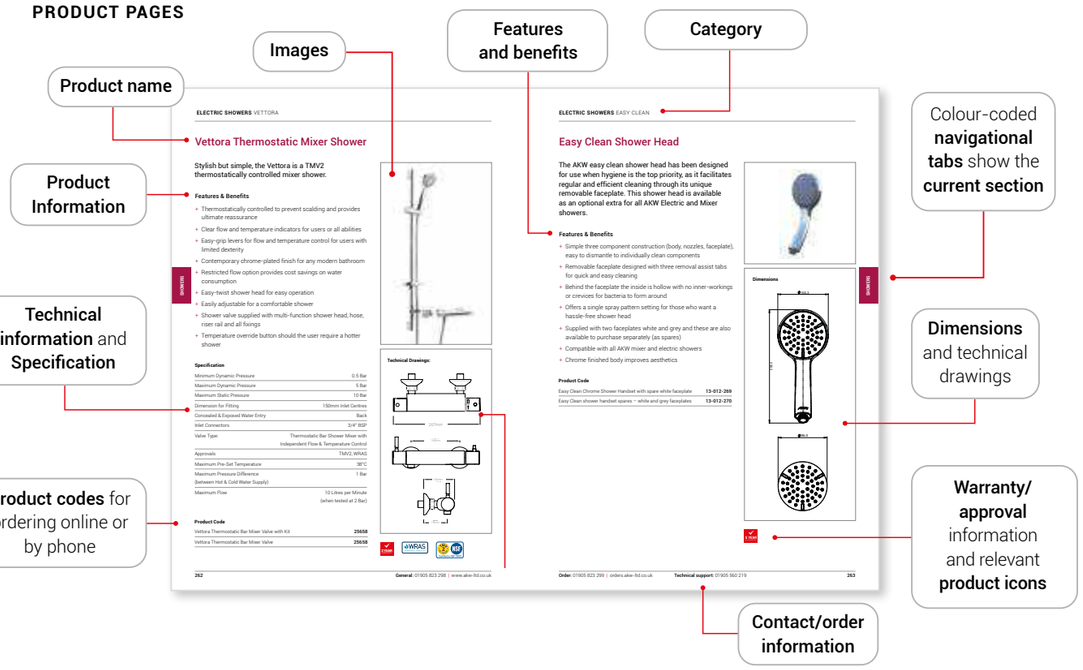

Product installation and technical guides can be found at the end of each section.

If you need extra copies of this catalogue, contact **marketing@akw-ltd.co.uk** or download the digital version from our website, **akw-ltd.co.uk**

Icons

We have created some simple icons to make the features and benefits of a product quickly recognisable.

WET ROOM FORMER/SHOWER TRAY ICONS

You will find these icons on the Wet Room Former and Shower Tray product pages. They illustrate where they can be installed, whether they are level access or surface mounted and whether the waste is central or offset.

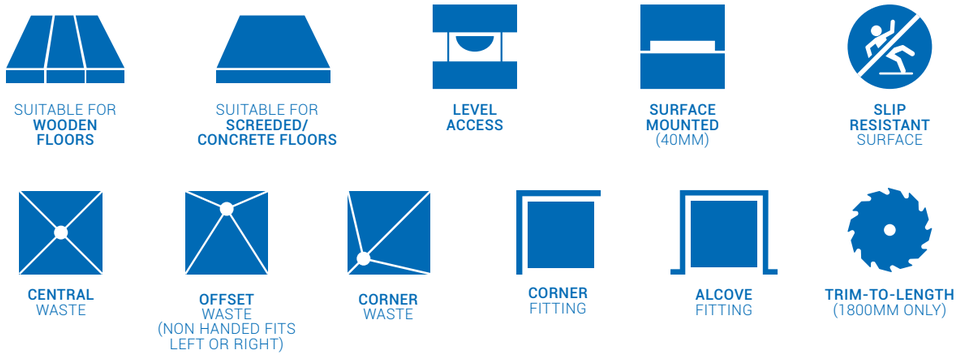

WARRANTY ICONS

Look out for our **Warranty Icons** throughout, showing the length of warranty provided for each product.

SHOWER SCREEN / SHOWER TRAY / FORMER COMPATIBILITY

These icons appear on the Shower Screen and Shower Tray product pages. The colour illustrates the shower screen type.

The reference code in the box illustrates the compatibility of screens and trays.

- A — STANDARD SHOWER SCREENS
- SE — SLIDING SHOWER SCREENS
- GA — GLASS SHOWER SCREENS
- A — SILVERDALE® SHOWER SCREENS
- WF5 — CONTOUR SHOWERS LTD. SCREEN OPTION

Choosing the right products

Here is an easy-to-use reference to help you choose which AKW products you need.

STEP 1: CHOOSE A SHOWER TRAY/WET ROOM FORMER

You'll find all our shower trays from page 57.

+ **Access requirement for user** Is it a multi-user home, does the user use a walking aid or wheelchair? AKW offer a wide variety of level access and low level shower trays.
+ **Floor type:** AKW shower trays are designed for different types of floors e.g. wooden, solid concrete floors (which could be unbreachable) or a screeded floor.
+ **Tray type:** Where is your shower tray going to be fitted? In a corner, or an alcove? Does it need to be cut to fit a particular size? Many of our trays are bath replacements and are therefore handed to the waste end.
+ **Drainage:** Most AKW trays will accommodate gravity or pumped wastes – indeed, some come with them already built in. If your shower enclosure requires waste water to be pumped away, we have a wide selection of drainage pumps (see wastes on **page 111**).

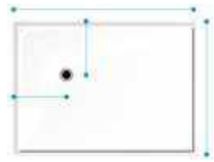

Left-hand tray, waste to the left

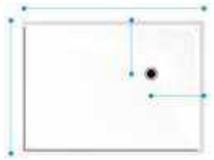

Right-hand tray, waste to the right

Please note: AKW shower trays are not generally suitable for use with power showers or high-flow systems.

STEP 2: CHOOSE A SHOWER SCREEN

Once you've chosen the tray, the next step is to specify a suitable shower screen (page 151).

+ **Entry and access:** It's important to think about how the shower screen opens (the entry path), so that there's space for other fittings such as the wash basin and toilet. Our shower screens are handed in the same manner as the trays, according to waste end.

Left-handed (A)

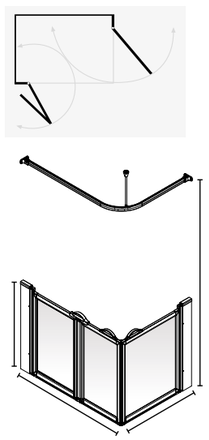

Right-handed (A)

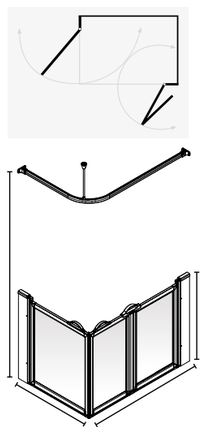

STEP 3: BUY EVERYTHING YOU NEED TO COMPLETE YOUR INSTALLATION IN ONE PLACE

You can now buy everything you need to complete your installation from AKW, saving you time and money. AKW offers a huge selection of products including:

WASTE SYSTEMS 111

SHOWERS 267

WALLS & SAFETY FLOORING 299

MOBILITY SUPPORT 329

SANITARYWARE & BRASSWARE 407

HEATING & ELECTRICAL 531

BATHROOM FURNITURE 515

PLUMBING FITTINGS 545

Placing an order

Ordering is easy; you can order online, by phone, fax or by emailing us.

Our friendly Customer Service team are here to help and can be contacted Monday-Friday, from 8am-5pm.

- @ orders@akw-ltd.co.uk
- orders.akw-ltd.co.uk
- 01905 823 299
- 01905 823 297

ORDERING ONLINE

orders.akw-ltd.co.uk

- **Available 24/7 via computer, tablet or smartphone**
- **Get account-based pricing**
- **Generate quotes online**
- **Select delivery date to suit you**

*Extended cut off till 2pm

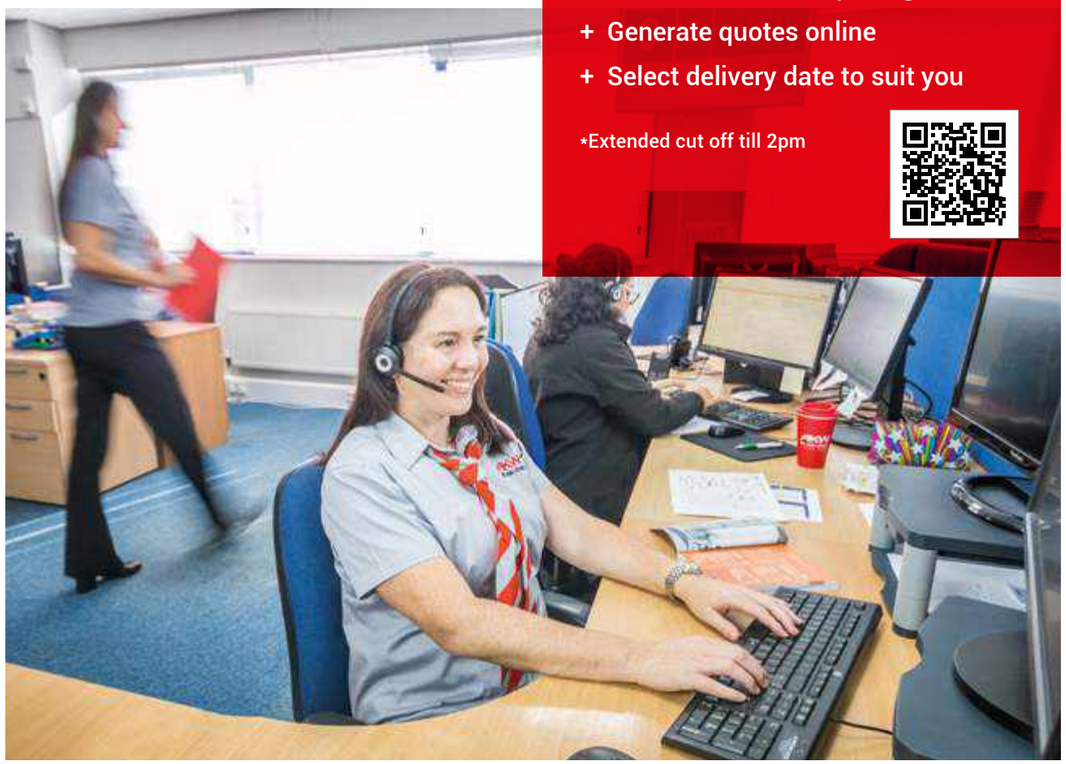

Customer Services

Our Customer Service Centre is made up of 26 members of staff who are our first point of contact for all customers. They manage on average 400 calls, 450 orders, and 200 quotations per day. Their average call wait time is just 6 seconds and we currently have a 98% service level.

We also have a **Technical Helpline** to answer any questions about our products and installation you may have, before or after purchase.

We are here to help, call our Technical Team on **01905 560 219** or Customer Services on **01905 823 299** from 8am-5pm.

TRADE COUNTER

You can collect your order the same day from our trade counter with AKW's free click and collect service.

Open Monday to Friday, from 8am to 5.30pm (last orders 4pm).

Independence House, Pointon Way, Hampton Lovett, Droitwich Spa, WR9 0LW

AKW'S SPECIALIST KITCHEN TEAM

For enquiries relating to AKW kitchens, get in touch with our specialist kitchen team. We also offer a **free kitchen survey** service to OTs and local authorities.

Request a Kitchen Catalogue here
www.akw-ltd.co.uk/contact

01905 823 262
kitchens@akw-ltd.co.uk

Surveying excellence

At the heart of every successful project is careful planning, which is why AKW's specialist Surveying team covers the whole of the UK to complete over 5,000 surveys per year.

Naturally we put safety and security first, so all our surveyors carry AKW ID cards with Braille stickers for visually impaired customers. In addition they are all fully disclosure checked and they all wear AKW branded work wear to clearly identify them as AKW employees whilst attending the properties of potentially vulnerable people.

Our thorough surveys provide complete peace of mind that the products and installation methods we specify will meet the client's needs, fit first time and give trouble-free use for many years to come.

Please email CSS@akw-ltd.co.uk to arrange a survey.

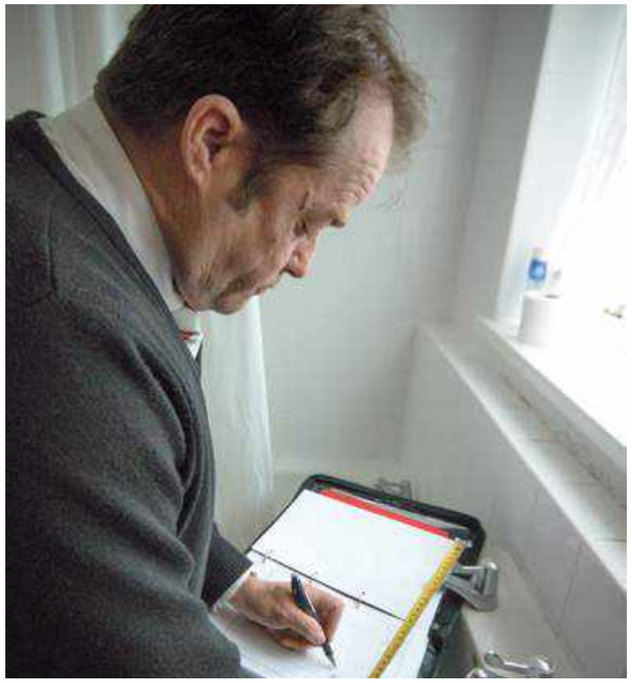

Our simple three-stage survey process:

1. **Within ten working days of receiving instruction, an experienced AKW surveyor will undertake a site survey and take all necessary measurements.**

2. **Our designs will be based on healthcare professional reports and tenants' specific needs to ensure we fully understand what is required and that we can provide the right technical advice.**

3. **Within five working days, we'll provide a 2D plan view (or 3D for kitchens) computer-aided drawing of how the new kitchen or bathroom will look.**

Delivery

We have a dedicated logistics service with over 30 vehicles providing on-time, in full deliveries across the UK mainland.

XPO has tailored a flexible solution for AKW using a dedicated truck fleet running an average of **30+ routes per day**.

Drivers distribute products nationwide to trade and e-commerce customers from AKW's warehouse in Droitwich Spa, Worcestershire, and four XPO satellite sites with access to provide palletised transport and global forwarding services as needed.

We will deliver goods to meet timescales and planning, whether you need your goods next day or in the future, we are happy to work with you to get the job done. All you need to do is ensure that your order is with us by the relevant cut off times, as detailed below:

Geographical area	Order cut-off	Delivery lead time or dedicated day
Mainland UK	12pm today	Next working day
Highlands of Scotland	12pm today	2 working days
Channel Islands	12pm today	2 working days
Isle of Wight	12pm today	3 working days
Isle of Man	12pm Friday	Wednesday

Scan for online orders site
Online ordering extended cut off until 2pm

Here to help

The best help comes from people who really understand your needs, no matter how big or small it may be.

You want your items delivered on time, which is why we have over 30 dedicated vehicles delivering nationwide, because no one takes as much care as us.

You want advice from people who've been in the same spot you're in, so our Technical team is staffed by installers with decades of experience, from 8am-5pm every weekday.

If our customers are happy, we're happy.

General enquiries:

01905 823 298

akw-ltd.co.uk

orders@akw-ltd.co.uk

Technical enquiries:

01905 560 219

tech@akw-ltd.co.uk

Regulation & compliance

AKW is committed to ensuring our products comply with all mandatory legislation, with many also having been tested to voluntary standards.

For any product carrying the UKCA Mark, we can supply a copy of the relevant Declaration of Performance (CPR) or Conformity (MDD).

BEAB Approval is used by electrical manufacturers to support CE Marking and demonstrate conformity with Low Voltage Directive (LVD).

For any product carrying the **CE Mark**, we can supply a copy of the relevant Declaration of Performance (CPR) or Conformity (MDD).

WRAS Approval demonstrates that a product won't cause waste, misuse, undue consumption or contamination of the water supply.

Products that carry the **BEAB Care Mark** comply with additional safety/ performance criteria for use in hospitals and other care establishments.

The **RNIB Mark** identifies products that are easy to use if you're blind or partially sighted.

ISO 9001: International Standard for Quality Management Systems. **ISO 14001**: International Standard for Environmental Management Systems.

Products carrying the **EMC Mark** have been approved through Electromagnetic Compatibility (EMC) Testing from Intertek.

AKW is a member of the Bathroom Manufacturers Association (BMA).

The **European Water Label** aims to reduce water consumption by identifying the water consumption of relevant products.

AKW is an approved supplier of the **Association of Plumbing & Heating Contractors.**

All of our **Thermostatic Mixing Valves** (TMVs) meet the requirements for either the TMV2 (domestic sector) or TMV3 (healthcare sector) scheme.

Wet Rooms

Shower Screen type
(with tray compatibility reference code):

- A — Standard Shower Screens
- GA — Glass Shower Screens
- SE — Sliding Shower Screens
- A — Silverdale® Shower Screens
- LAR — Larenco Shower Screens
- OP — Opulence Shower Screens

L/R in the product code denotes whether the screen is Left or Right handed.

Wet Room Formers 31

Showerdec 31
Tuff Form8® Former 39
Tuff Form® Former 47
TriForm® Former 57

Tanking Kits & Accessories 62

MAPEI Wet Room Tanking Kit 63
MAPEI AquaDefense Kit 64
Threshold Kits 64
FormSafe® Kit 65

You may also need:

Waste Systems 111
Showers 267
Shower Screens 151
Timber 327
Plumbing Fittings 545
Walls & Safety Flooring 299

ShowerDec®

Quickly create a walk in wet room by installing a ShowerDec® wetroom floor former into the bathroom floor. ShowerDec® floor formers have a pre-formed gradient moulded into their top surface, so there is no need to manually create a fall in the floor to the shower trays waste position.

A ShowerDec® will greatly reduce installation time and is quicker and easier to install than traditional screeded methods.

+ ShowerDec® has been tested to withstand 100 Stone / 635kg
+ No additional support needed around the waste assisting ease & speed of installation
+ Can be cut to size in virtually any position
+ 'BEST IN CLASS' falls of approximately 2° - 2.5° built into the top surface
+ Lifetime warranty

ShowerDec®

Wetroom shower areas with exceptional strength, up to 100 stone / 635kg.

Features & Benefits

- A level access wetroom shower area concealed beneath the vinyl or tiled flooring once installed
- Withstands 100 Stone / 635Kg to simulate a standing person
- No additional support needed around the waste for quick & easy installation*
- 24mm thick to facilitate installation with existing floorboards
- 40mm flat area around the floor former perimeter for door placement & water retention
- Larger shower area, ideal for wheelchairs
- Range of half height shower doors available, from page 151
- Supplied without a waste, see waste options page 36
- Lifetime warranty
- Floor formers are not handed

LIFETIME WARRANTY

*Tested in accordance with a standard floor with 16" joist centres of 47mm width & supported around the floor former outer edges. No additional support around the waste area.

Installation Details

- No raised collar around the underside of the waste for easy installation on timber floors
- Circular ribbed underside designed for setting into a concrete or screed base & eliminates slippage when installing
- Textured top surface allows excellent adhesion of vinyl flooring
- Offset waste positions to avoid joists
- 'BEST IN CLASS' falls of approximately 2.5° built into the top surface
- Pre-formed semi-drilled fixing points for secure installation
- Can be cut to size in virtually any position using a circular saw or jigsaw
- Suitable for timber & screeded floors
- Supplied with fixing screws

Dimensions, Size Options & Product Codes:

ShowerDec® Wetroom Former – *900 x 900mm*

Former code: **SD900x900**

Compatible shower screens:

HW GA SE SM EW HFW LAR OP

For WF equivalents please see page 184

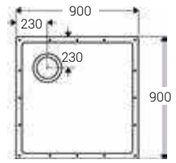

ShowerDec® Wetroom Former – *1000 x 1000mm*

Former code: **SD1000x1000**

Compatible shower screens:

HW GA SE SM EW HFW LAR OP

For WF equivalents please see page 184

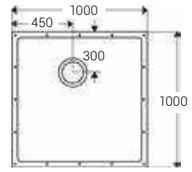

ShowerDec® Wetroom Former – *1200 x 750mm*

Former code: **SD1200x750**

Compatible shower screens:

HW GA SJ SM SN SU HFW MW NW LAR

For WF equivalents please see page 184

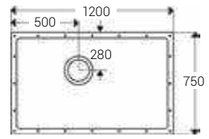

ShowerDec® Wetroom Former – *1200 x 900mm*

Former code: **SD1200x900**

Compatible shower screens:

HW GA SJ SM SN SU EW HFW MW NW LAR OP

For WF equivalents please see page 184

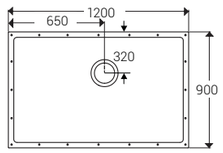

ShowerDec® Wetroom Former – *1200 x 1200mm*

Former code: **SD1200x1200**

Compatible shower screens:

HW GA SJ SM SN SU EW HFW MW NW LAR OP

For WF equivalents please see page 184

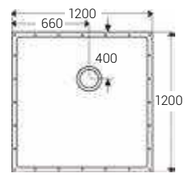

Dimensions, Size Options & Product Codes:

ShowerDec® Wetroom Former – *1300 x 800mm*

Former code: **SD1300x800**

Compatible shower screens:

EW5 HW XW GA SE SJ SM SN SU SX SY EW HFW NW UW ZUW LAR OP

For WF equivalents please see page 184

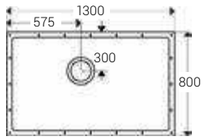

ShowerDec® Wetroom Former – *1400 x 900mm*

Former code: **SD1400x900**

Compatible shower screens:

BW EW5 HW GA SJ SM SN SU EW HFW NW ZUW LAR OP

For WF equivalents please see page 184

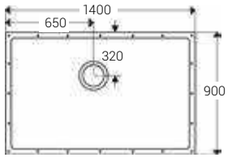

ShowerDec® Wetroom Former – *1500 x 820mm*

Former code: **SD1500x820**

Compatible shower screens:

BW HW PW TTW XW ZW GA SE SJ SM SN SU SX SY EW HFW NW UW ZUW LAR OP

For WF equivalents please see page 184

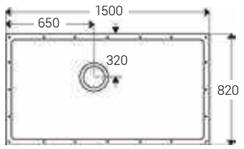

ShowerDec® Wetroom Former – *1500 x 1000mm*

Former code: **SD1500x1000**

Compatible shower screens:

BW HW PW TTW XW ZW GA SE SJ SM SN SU SX SY EW HFW NW UW ZUW LAR OP

For WF equivalents please see page 184

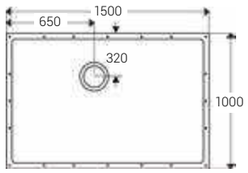

ShowerDec® Wetroom Former – *1500 x 1200mm*

Former code: **SD1500x1200**

Compatible shower screens:

HW PW TTW ZW GA SJ SM SN SU EW HFW NW UW ZUW LAR OP

For WF equivalents please see page 184

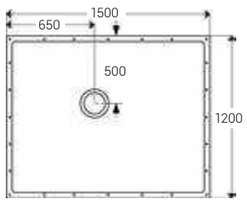

SHOWER TRAYS WET ROOM FORMERS

WET ROOMS

Dimensions, Size Options & Product Codes:

ShowerDec® Wetroom Former – *1800 x 820mm*

Former code: **SD1800x820**

Compatible shower screens:

HW PW TTW ZW GA SJ SN SU SX HFW NW UW ZUW LAR OP

For WF equivalents please see page 184

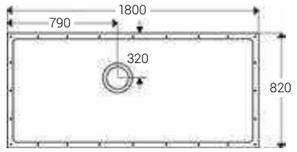

ShowerDec® Wetroom Former – *1800 x 900mm*

Former code: **SD1800x900**

Compatible shower screens:

HW PW TTW ZW GA SJ SN SU SX HFW NW UW ZUW LAR OP

For WF equivalents please see page 184

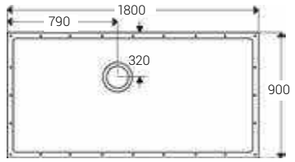

Showerdec® Waste options

CTW01 Gravity Waste

08CTW01

TSG52 Gravity Waste

08GT52NSC

TSG52 Square Tile Gravity Waste

08GT52-S

TSG52 Round Vinyl Gravity Waste

08GT52-R

TF75 Gravity waste

25106

For details see **page** 123

GW90-2 Low Height Wet Waste with TF Tiled Floor Adaptor

25498-UK

For details see **page** 124

DW90 Low Depth Dry Shower Waste – with Tuff Form® Tiled Floor Adaptor

25418-UK

For details see **page** 135

GW90-2 Low Height Wet Waste with Vinyl Floor Adaptor

25499-UK

For details see **page** 121

SS-TF75 Stainless Steel Gravity Waste

LB00101

For details see **page** 125

For details contact customer services on **01905 823 298**

For installation information - see **page** 53

Tuff Form8®

Tuff Form8 is our new level-access wet room former which combines all of Tuff Form's existing benefits with a brand new fitting innovation to create our best, most uncompromising wet room former to date.

+ Octagonal waste plate achieves 15 different positions to make installation even easier
+ Easily trimmed on site to enable fast and simple installation
+ Exceptionally strong to accommodate a user with wheelchair and a carer (up to 60 stone / 381kg)
+ Level access with large size options
+ Well-engineered 1:16 gradient allows water to be drained away quickly
+ Fully recyclable

Download your copy of the **Tuff Form8** brochure:
akw-ltd.co.uk/catalogues-brochures-guides/

Tuff Form8®

Tuff Form8

Features & Benefits

- Octagonal waste plate achieves 15 different positions to avoid all obstructing joists making it suitable for all UK joist patterns
- Ability to remove octagonal plate makes for quick and easy installation of pipework
- Waste installation requires no tedious screw hole drilling
- Wide selection of waste options
- Versatile applications suitable for both wooden and concrete floors
- Easily trimmable within 150mm of the octagonal plate
- No need for under boarding
- Pre-formed fixing holes, for quick and easy installation
- Suitable for use with underfloor heating
- Ribbed underside structure eliminates slippage or float during installation
- Designed with a variety of end users in mind, able to durably support wheelchair users and carers up to 60 stone on timber joists
- Level access with large size options
- A solid support by the cutting-edge SMC-GRP (Sheet Moulding Compound – Glass Reinforced Plastic) composite technology, enabling easy transportation and installation
- Well-engineered 1:16 gradient ensure that there is no water pooling in the shower area thanks to the octagonal plate design that provides a continual fall all the way to the waste
- Peace of mind for long-term use

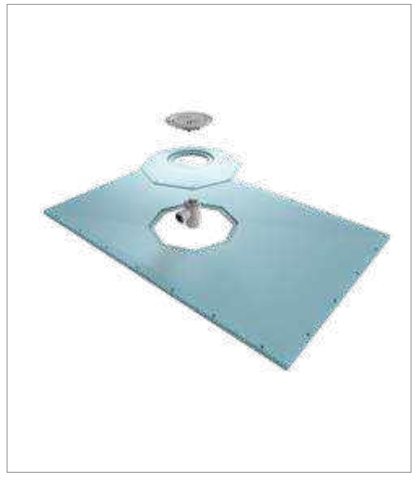

For guide to icons, see **page 19**

Approval: BS EN 14527

Specifications

Thickness: 22mm to suit the 18mm UK timber floorboard + 4mm plywood, no extra adjustment needed for installation
Weight limit: 60 stone (381kg) on joists/ unlimited on concrete
Fall to waste: 15mm
Material composition: Compression moulding, SMC-GRP (Sheet Moulding Compound – Glass Reinforced Plastic)
Recyclability: Recyclable
Screen Compatibility: Larenco, Opulence, Level Best, Silverdale® and Standard Screens

Dimensions, Size Options & Product Codes:

Tuff Form8® Wet Room Former – *900 x 900mm*

Former only	**21130**
Former with GW50 Waste & Vinyl Floor Adaptor	**21130-1**
Former with GW19 Waste & Vinyl Floor Adaptor	**21130-2**
Former with TF75 Gravity Waste for Vinyl Floor	**21130-3**
Former with DW90 Dry Waste for Vinyl Floor	**21130-4**
Former with DW90 Dry Waste for Tiled Floor	**21130-5**
Former with GW90-2 Wet Waste for Vinyl floor	**21130-6**
Former with GW90-2 Wet Waste for Tiled floor	**21130-7**

Compatible shower screens:

HW GA SE SM EW HFW LAR OP

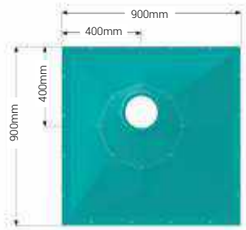

Tuff Form8® Wet Room Former – *1000 x 1000mm*

Former only	**21131**
Former with GW50 Waste & Vinyl Floor Adaptor	**21131-1**
Former with GW19 Waste & Vinyl Floor Adaptor	**21131-2**
Former with TF75 Gravity Waste for Vinyl Floor	**21131-3**
Former with DW90 Dry Waste for Vinyl Floor	**21131-4**
Former with DW90 Dry Waste for Tiled Floor	**21131-5**
Former with GW90-2 Wet Waste for Vinyl floor	**21131-6**
Former with GW90-2 Wet Waste for Tiled floor	**21131-7**

Compatible shower screens:

HW GA SE SM EW HFW LAR OP

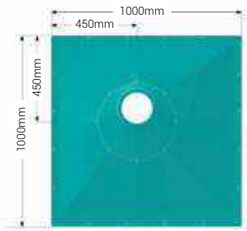

Tuff Form8® Wet Room Former – *1135 x 770mm*

Former only	**21132**
Former with GW50 Waste & Vinyl Floor Adaptor	**21132-1**
Former with GW19 Waste & Vinyl Floor Adaptor	**21132-2**
Former with TF75 Gravity Waste for Vinyl Floor	**21132-3**
Former with DW90 Dry Waste for Vinyl Floor	**21132-4**
Former with DW90 Dry Waste for Tiled Floor	**21132-5**
Former with GW90-2 Wet Waste for Vinyl floor	**21132-6**
Former with GW90-2 Wet Waste for Tiled floor	**21132-7**

Compatible shower screens:

HW GA SU EW HFW LAR

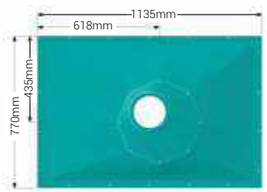

See **Waste Options** starting on **page 111**

Dimensions, Size Options & Product Codes:

Tuff Form8® Wet Room Former *–1200 x 1200mm*

Former only	**21133**
Former with GW50 Waste & Adaptor	**21133-1**
Former with GW19 Waste & Adaptor	**21133-2**
Former with TF75 Gravity Waste	**21133-3**
Former with DW90 Dry Waste for Vinyl Floor	**21133-4**
Former with DW90 Dry Waste for Tiled Floor	**21133-5**
Former with GW90-2 Wet Waste for Vinyl floor	**21133-6**
Former with GW90-2 Wet Waste for Tiled floor	**21133-7**

Compatible shower screens:

HW GA SJ SM SN SU EW HFW MW NW LAR OP

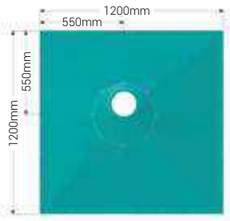

Tuff Form8® Wet Room Former *– 1300 x 820mm*

Former only	**21134**
Former with GW50 Waste & Adaptor	**21134-1**
Former with GW19 Waste & Adaptor	**21134-2**
Former with TF75 Gravity Waste	**21134-3**
Former with DW90 Dry Waste for Vinyl Floor	**21134-4**
Former with DW90 Dry Waste for Tiled Floor	**21134-5**
Former with GW90-2 Wet Waste for Vinyl floor	**21134-6**
Former with GW90-2 Wet Waste for Tiled floor	**21134-7**

Compatible shower screens:

EW5 HW XW GA SE SJ SM SN SU SX SY EW HFW NW UW ZUW LAR

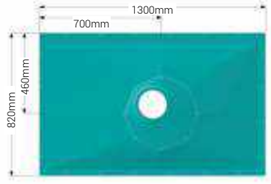

Tuff Form8® Wet Room Former *– 1400 x 900mm*

Former only	**21135**
Former with GW50 Waste & Adaptor	**21135-1**
Former with GW19 Waste & Adaptor	**21135-2**
Former with TF75 Gravity Waste	**21135-3**
Former with DW90 Dry Waste for Vinyl Floor	**21135-4**
Former with DW90 Dry Waste for Tiled Floor	**21135-5**
Former with GW90-2 Wet Waste for Vinyl floor	**21135-6**
Former with GW90-2 Wet Waste for Tiled floor	**21135-7**

Compatible shower screens:

BW EW5 HW GA SJ SM SN SU EW HFW NW ZUW LAR OP

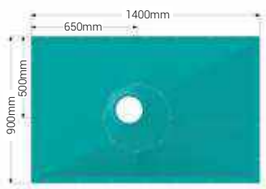

WET ROOMS WET ROOM FORMERS

WET ROOMS

Dimensions, Size Options & Product Codes:

Tuff Form8® Wet Room Former *– 1500 x 820mm*

Former only	**21136**
Former with GW50 Waste & Adaptor	**21136-1**
Former with GW19 Waste & Adaptor	**21136-2**
Former with TF75 Gravity Waste	**21136-3**
Former with DW90 Dry Waste for Vinyl Floor	**21136-4**
Former with DW90 Dry Waste for Tiled Floor	**21136-5**
Former with GW90-2 Wet Waste for Vinyl floor	**21136-6**
Former with GW90-2 Wet Waste for Tiled floor	**21136-7**

Compatible shower screens:

BW HW PW TTW XW ZW GA SE SJ SM SN SU SX SY EW HFW NW UW ZUW LAR OP

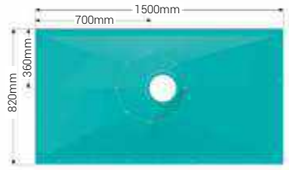

Tuff Form8® Wet Room Former *– 1500 x 1200mm*

Former only	**21137**
Former with GW50 Waste & Adaptor	**21137-1**
Former with GW19 Waste & Adaptor	**21137-2**
Former with TF75 Gravity Waste	**21137-3**
Former with DW90 Dry Waste for Vinyl Floor	**21137-4**
Former with DW90 Dry Waste for Tiled Floor	**21137-5**
Former with GW90-2 Wet Waste for Vinyl floor	**21137-6**
Former with GW90-2 Wet Waste for Tiled floor	**21137-7**

Compatible shower screens:

HW PW TTW ZW GA SJ SM SN SU EW HFW NW UW ZUW LAR OP

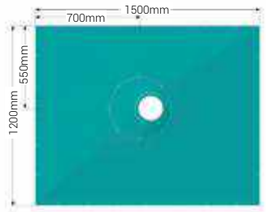

Tuff Form8® Wet Room Former *– 1800 x 820mm*

Former only	**21138**
Former with GW50 Waste & Adaptor	**21138-1**
Former with GW19 Waste & Adaptor	**21138-2**
Former with TF75 Gravity Waste	**21138-3**
Former with DW90 Dry Waste for Vinyl Floor	**21138-4**
Former with DW90 Dry Waste for Tiled Floor	**21138-5**
Former with GW90-2 Wet Waste for Vinyl floor	**21138-6**
Former with GW90-2 Wet Waste for Tiled floor	**21138-7**

Compatible shower screens:

HW PW TTW ZW GA SJ SN SU SX HFW NW UW ZUW LAR OP

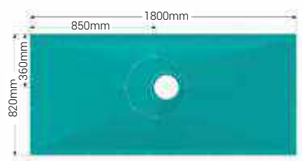

Tuff Form8® Waste options

TF75 Gravity waste

25106

For details see **page** 123

GW90-2 Low Height Wet Waste with TF Tiled Floor Adaptor

25498-UK

For details see **page** 124

DW90 Low Depth Dry Shower Waste – with Tuff Form® Tiled Floor Adaptor

25418-UK

For details see **page** 135

SilentFlow+® Waste Pump (PGTF) with 22mm Outlet

25414

For details see **page** 133

GW90-2 Low Height Wet Waste with Vinyl Floor Adaptor

25499-UK

For details see **page** 121

TF75 Bottom Outlet Waste

25408

For details see **page** 122

SS-TF75 Stainless Steel Gravity Waste

LB00101

For details see **page** 125

CTW01 Shower Trap

08CTW01

For details contact customer services on **01905 823 298**

TFWA Tuff Form® Waste Adaptor

25124/29

For details see **page** 127

TSG52 Round Vinyl Gully

08GT52-R

For details contact customer services on **01905 823 298**

DW90 Low Depth Dry Shower Waste – with Tuff Form® Vinyl Floor Adaptor

25419-UK

For details see **page** 135

CUW01 Gravity Waste

08CUW01

For installation information - see **page** 53

Tuff Form®

Helping you create wet floor shower areas and multi-user bathrooms, Tuff Form makes excellent use of available space.

+ Creates a full level-access showering solution
+ Easily trimmed on site to enable fast and simple installation
+ Exceptionally strong to accommodate a user with wheelchair and a carer (up to 60 stone / 381kg)
+ Over half a million formers sold worldwide
+ Fully recyclable

Tuff Form

TuffForm

Features & Benefits

- Creates a full level access showering solution for both wooden and solid floors
- A solid support by the cutting-edge SMC-GRP (Sheet Moulding Compound – Glass Reinforced Plastic) composite technology, enabling easy transportation and installation
- Easily trimmable within 150mm of the waste
- Ribbed underside structure eliminates slippage or float during installation
- Offset waste position to avoid joists or pipework
- Pre-formed fixing holes, for quick and easily installation
- Exceptionally strong to accommodate a user with wheelchair and a carer too (up to 60 stone / 381kg bearing weight)
- Proven popularity with over a million installations worldwide
- Level access with large size options
- Screen sets fold back to free up floor space – ideal for wheelchair access
- A variety of screen sizes and styles give you added choice
- A wet floor installation with suitable slip-resistant flooring provides excellent water integrity with comfort and safety underfoot
- Superior strength and rigidity, ideal for fitting under the bath in multi-tenant dwellings

For guide to icons, see **page 19**

Approval: BS EN 14527

Specification

Thickness: 22mm to suit the 18mm UK timber floorboard + 4mm plywood, no extra adjustment needed for installation
Weight limit: 60 stone (381kg) on joists/ unlimited on concrete
Fall to waste: 15mm
Material composition: Compression moulding, SMC-GRP (Sheet Moulding Compound – Glass Reinforced Plastic)
Recyclability: Recyclable
Screen Compatibility: Larenco, Opulence, Level Best, Silverdale® and Standard Screens

WET ROOMS

Dimensions, Size Options & Product Codes:

Tuff Form® Wet Room Former – *900 x 900mm*

Former only	**21000**
Former with TF75 Waste	**21002**
Former with GW50 waste and waste adaptor	**21060**
Former with low depth GW90 waste and adaptor	**21089**

Compatible shower screens:

HW GA SE SM EW HFW LAR OP

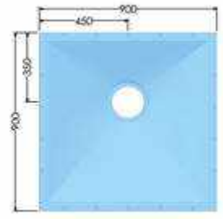

Tuff Form® Wet Room Former – *1000 x 1000mm*

Former only	**21008**
Former with TF75 Waste	**21006**
Former with GW50 waste and waste adaptor	**21061**
Former with low depth GW90 waste and adaptor	**21090**

Compatible shower screens:

HW GA SE SM EW HFW LAR OP

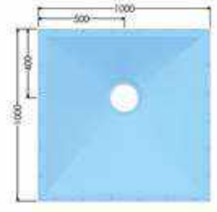

Tuff Form® Wet Room Former – *1135 x 770mm*

Former only	**21012**
Former with TF75 Waste	**21014**
Former with GW50 waste and waste adaptor	**21062**
Former with low depth GW90 waste and adaptor	**21091**

Compatible shower screens:

HW GA SU EW HFW LAR

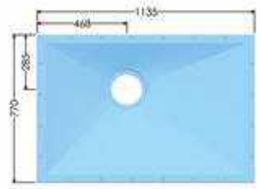

Tuff Form® Wet Room Former – *1200 x 900mm*

Former only	**21015**
Former with TF75 Waste	**21021**
Former with GW50 waste and waste adaptor	**21023**

Compatible shower screens:

HW GA SJ SM SN SU EW HFW MW NW LAR OP

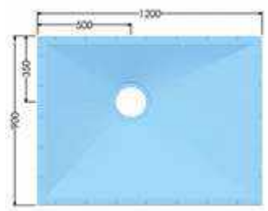

See **Waste Options** starting on page 35

Dimensions, Size Options & Product Codes:

Tuff Form® Wet Room Former – *1200 x 1200mm*

Former only	**21018**
Former with TF75 Waste	**21020**
Former with GW50 waste and waste adaptor	**21065**
Former with low depth GW90 waste and adaptor	**21095**

Compatible shower screens:

HW GA SJ SM SN SU EW HFW MW NW LAR OP

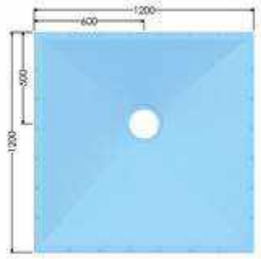

Tuff Form® Wet Room Former – *1300 x 820mm*

Former only	**21027**
Former with TF75 Waste	**21029**
Former with GW50 waste and waste adaptor	**21063**
Former with low depth GW90 waste and adaptor	**21092**

Compatible shower screens:

EW5 HW XW GA SE SJ SM SN SU SX SY EW HFW NW UW ZUW LAR

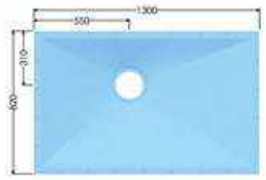

Tuff Form® Wet Room Former – *1400 x 900mm*

Former only	**21028**
Former with TF75 Waste	**21030**
Former with GW50 waste and waste adaptor	**21070**
Former with low depth GW90 waste and adaptor	**21094**

Compatible shower screens:

BW EW5 HW GA SJ SM SN SU EW HFW NW ZUW LAR OP

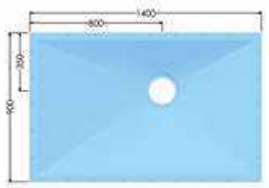

Tuff Form® Wet Room Former – *1500 x 820mm*

Former only	**21036**
Former with TF75 Waste	**21038**
Former with GW50 waste and waste adaptor	**21064**
Former with low depth GW90 waste and adaptor	**21093**

Compatible shower screens:

BW HW PW TTW XW ZW GA SE SJ SM SN SU SX SY EW HFW NW UW ZUW LAR OP

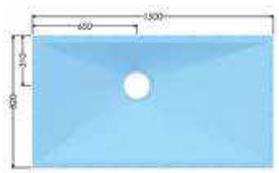

WET ROOMS WET ROOM FORMERS

WET ROOMS

Dimensions, Size Options & Product Codes:

Tuff Form® Wet Room Former – *1500 x 1200mm*

Former only	**21045**
Former with TF75 Waste	**21046**
Former with GW50 waste and waste adaptor	**21067**
Former with low depth GW90 waste and adaptor	**21096**

Compatible shower screens:

HW PW TTW ZW GA SJ SM SN SU EW HFW NW UW ZUW LAR OP

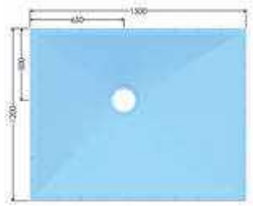

Tuff Form® Wet Room Former – *1800 x 820mm*

Former only	**21050**
Former with TF75 Waste	**21052**
Former with GW50 waste and waste adaptor	**21066**
Former with low depth GW90 waste and adaptor	**21097**

Compatible shower screens:

HW PW TTW ZW GA SJ SN SU SX HFW NW UW ZUW LAR OP

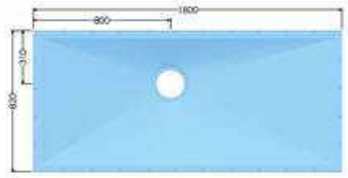

See **Compatible shower screens** starting on **page 151**

Tuff Form® Waste options

TF75 Gravity waste

25106

For details see **page** 123

DW90 Low Depth Dry Shower Waste – with Tuff Form® Tiled Floor Adaptor

25418-UK

For details see **page** 135

GW90-2 Low Height Wet Waste with Vinyl Floor Adaptor

25499-UK

For details see **page** 121

TFWA Tuff Form® Waste Adaptor with Standard Waste

25124 (50mm)
25129 (19mm)

For details see **page** 127

SS-TF75 Stainless Steel Gravity Waste

LB00101

For details see **page** 125

TF75 Bottom Outlet Waste

25408

For details see **page** 122

DW90 Low Depth Dry Shower Waste – with Tuff Form® Vinyl Floor Adaptor

25419-UK

For details see **page** 135

GW90-2 Low Height Wet Waste with TF Tiled Floor Adaptor

25498-UK

For details see **page** 124

SilentFlow+® Waste Pump (PGTF) with 22mm Outlet

25414

For details see **page** 133

Low depth GW90 Gravity Waste (50mm Water Trap)

25404

For details see **page** 120

Low depth GW90 Waste Tuff Form Adaptor (waste not included)

25409

For details see **page** 128

CUW01 Gravity Waste

08CUW01

WET ROOMS WET ROOM FORMERS

WET ROOMS

Tuff Form Shower Tray: Concrete Floor Installation

Tuff Form® inset into screed for complete level access on a concrete floor. Features the AKW PGTF Pumped Gulley Waste.

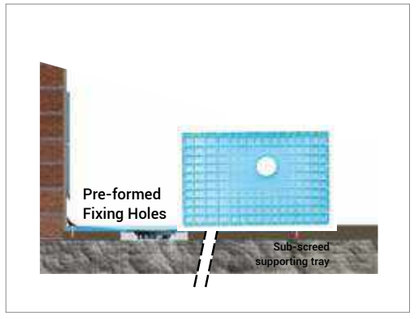

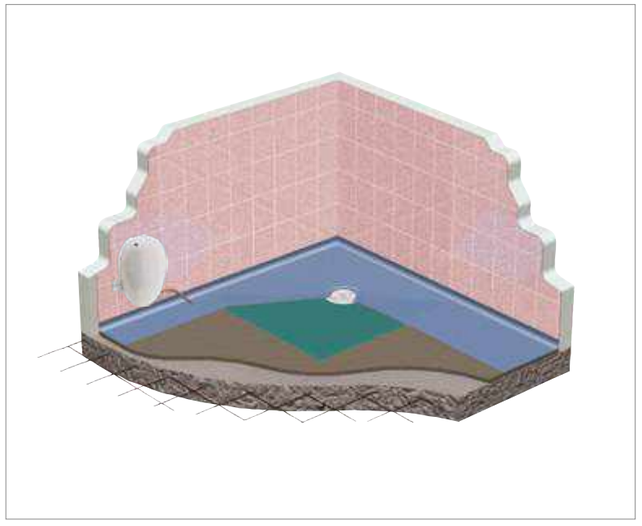

Tuff Form Shower Tray: Wooden Floor Installation

Tuff Form® installed on wooden joists. Features the AKW TF75 Gravity Waste.

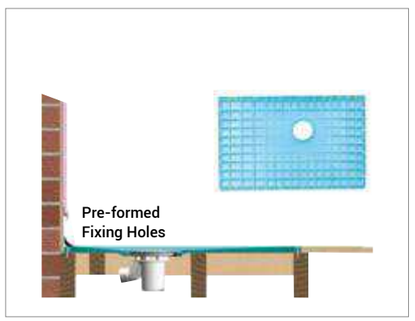

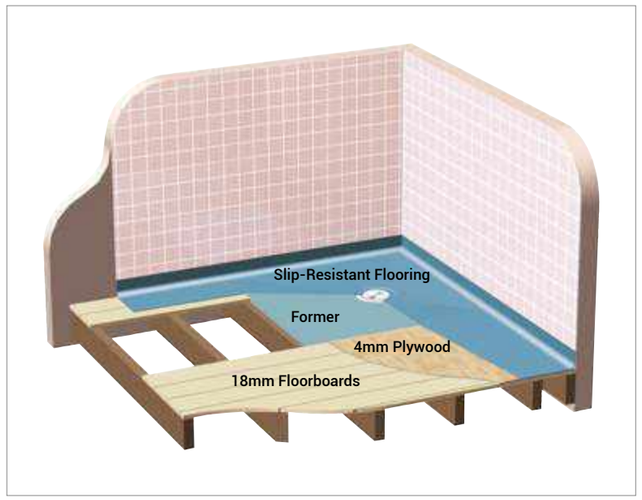

Important: For more information on waste compatibility, see **pages** 111

Tuff Form® Former: Bathroom for Life Installation

Tuff Form® offers superior strength and rigidity which can support a bath and bather. Installed with a Bath-to-Tray Adaptor, this provides an easy upgrade from a conventional bathroom to a wet floor showering area when needed.

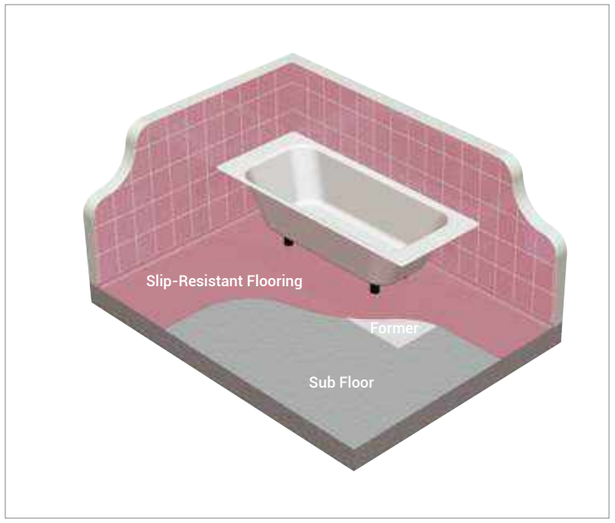

WET ROOMS WET ROOM FORMERS

WET ROOMS

From this

to this

TriForm®

TriForm® performs superbly and looks even better to create a truly aspirational yet functional showering experience. Offering perfectly level access, TriForm® can be used with a wide range of tiles and finishes.

+ Reversible two-in-one cover offers a choice of two different finishes
+ Three easy-fit waste positions deliver superior flow capacity
+ Exceptional drainage – up to 78 litres a minute with all three wastes fitted
+ Great weight bearing capacity of up to 40 stone / 254kg

TriForm

Features & Benefits

- Creates a full level access showering solution
- Can accommodate tiles floors only up to 25mm deep
- Numerous waste positions available to easily avoid joists
- Drill guides included for easy installation
- Self-supporting and suitable for ground floor and upstairs bathrooms
- Reversible two-in-one cover offers a choice of two different finishes
- Three easy-fit waste positions deliver superior flow capacity
- Exceptional drainage, capable of handling a flow rate of up to 78 litres of water per minute with all three wastes fitted
- Enhanced strength through its material composition accommodates a greater weight bearing capacity of up to 40 stone / 254kg

Specifications

Thickness: 22mm to suit the 18mm UK timber floorboard + 4mm plywood, no extra adjustment needed for installation
Strength: 40 stone (254kg)
Waste cover adjustment: 6-16mm reversible tileable stainless steel waste
Fall to waste: approximately 1:40
Material Composition: GRP (Glass Reinforced Plastic) fibreglass hand lay-up
Screen Compatibility: Larenco, Level Best, Silverdale® and Standard Screens

For guide to icons, see **page 19**

Dimensions, Size Options & Product Codes:

TriForm® Wet Room Former – *900 x 900mm*

Former Only: **21205**

Compatible shower screens:

HW GA SE SM EW HFW LAR OP

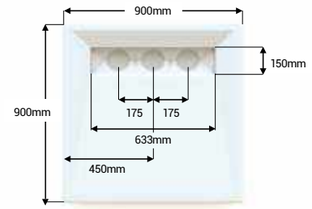

TriForm® Wet Room Former – *1000 x 1000mm*

Former Only: **21206**

Compatible shower screens:

HW GA SE SM EW HFW LAR OP

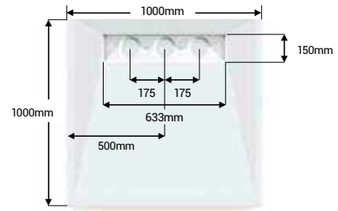

TriForm® Wet Room Former – *1200 x 900mm*

Former Only **21209**

Compatible shower screens:

HW GA SJ SM SN SU EW HFW NW LAR OP

TriForm® Wet Room Former – *1200 x 1200mm*

Former Only **21208**

Compatible shower screens:

HW GA SJ SM SN SU EW HFW MW NW LAR OP

TriForm® Wet Room Former – *1300 x 820mm*

Former Only **21207**

Compatible shower screens:

EW5 HW XW UW ZUW GA SE SJ SM SN SU SX SY EW HFW NW LAR

See **Compatible shower screens** starting on **page 151**

TriForm® Gulley Waste

Gulley Waste drain kit and cover options for use with any TriForm® wet floor former.

Features & Benefits

+ Two cover options: a two-in-one option (stainless steel on one side, a tiling option on reverse) and a one-sided decorative stainless steel slotted cover
+ Suitable to use with tiles ranging from 6-25mm

Product Codes

TriForm® Stainless Steel/Reverse-to-Tile Gulley Waste Kit (to suit 6-16mm thick tiles)	**21213**
TriForm® Stainless Steel/Reverse-to-Tile Gulley Waste Kit (to suit 16-25mm thick tiles)	**21214**
TriForm® Decorative Stainless Steel Slotted Gulley Waste Kit (to suit 6-16mm thick tiles)	**21215**
TriForm® Decorative Stainless Steel Slotted Gulley Waste Kit (to suit 16-25mm thick tiles)	**21216**

To suit 6-16mm thick tiles

To suit 16-25mm thick tiles

Reversible Stainless Steel Cover (Stainless Steel side)

Reversible Stainless Steel Cover (Tiled side)

Decorative Stainless Steel Slotted Cover

TriForm Waste options

DW90 Waste for Onyx Tray

25696-UK

For details see **page** 135

GW50 Gravity Waste

25126

For details see **page** 118

GW90 Onyx Waste

25694

For details see **page** 119

Low Depth GW90

25404

For details see **page** 120

GW19 19mm Gravity Waste

25125

For details see **page** 118

Tanking Kits & Accessories

Our tanking kits make your wet room 100% watertight. The range of options include fast-drying flexible liquid tanking membranes, to a pre-formed rubberised membrane system which is ready to tile immediately.

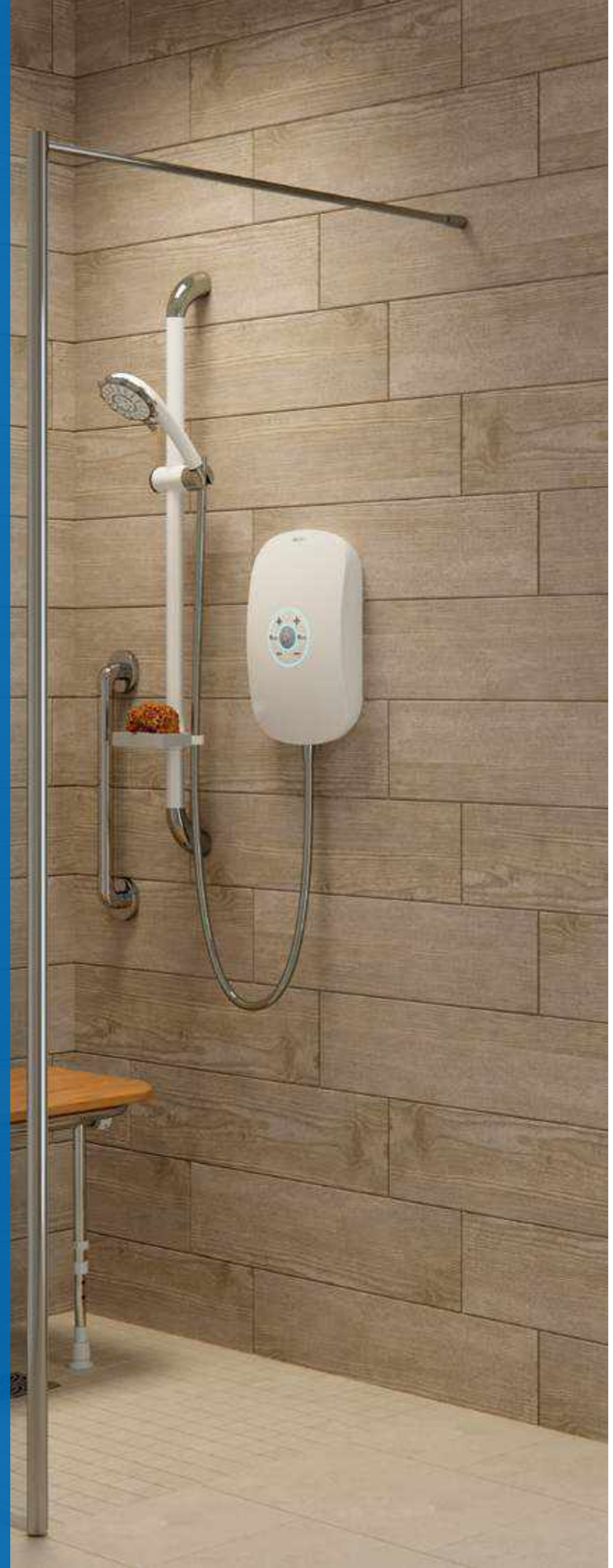

MAPEI Wet Room Tanking Kit

Features & Benefits

- Waiting time 1-2 hours between each coat; 12-24 hours before laying ceramic
- Complete drying: 5 hours (2mm of thickness at +23°C)
- Flexible, anti-fracture membrane
- Can be used on the following; plasterboard, gypsum or cementitious render, lightweight cement block and marine plywood
- Consumption: 1.5kg/sqm
- Application by trowel, roller or by spraying
- Ready to use – solvent free
- Single component
- Storage: 24 months (protect from frost)
- Easy to use tanking system

Product Codes

MAPEI Wet Room Tanking Kit	**LB00113**
Mapegum WPS (5kg/10kg/20kg)	**LB00115/ LB00114/ LB00139**
Mapeband Tape (10m x 120mm wide)	**LB00118**
Mapeband Internal Corners x2	**LB00116**
Mapeband External corners x2	**LB00117**
Mapeband Waste Outlet Gasket	**LB00119**
Mapeband Pipe Inlet Kit	**LB00120**

Kit includes

1x 10kg drum of Mapegum WPS (5m² coverage),

10 metres of Mapeband Tape (120mm wide),

4x Mapeband Internal Corners,

1x Mapeband Waste Outlet Gasket (400 x 400mm) and 1x Mapeband Pipe Inlet Kit.

MAPEI AquaDefense Kit

Ready to use, flexible, ultra-rapid drying waterproofing membrane for interior and exterior use in showers, wet rooms and on balconies. For use with all AKW formers. Can be reinforced with Mapetex SEL to provide an anti-fracture membrane.

LIFETIME GUARANTEE

Features & Benefits

+ Kit includes: 1x Mapei Primer G, 5 metres of Mapeband Tape (120mm wide) and 7.5kg drum of Mapelastic Aquadefense
+ Very fast drying (can be tiled after 4 hours)
+ 100% watertight
+ One-component, ready-to-use liquid

Product Code

MAPEI AquaDefense Kit	**21323**

Threshold Kits

Features & Benefits

+ Made from aluminium, for use on wet floors
+ Screw to floor and use silicone to seal
+ Helps to retain water within showering area
+ Screens can also be fitted with a threshold kit
+ Can be used as a ramp
+ Available as L-shaped or straight
+ Also available as made-to-measure

Threshold Kit Side Profile

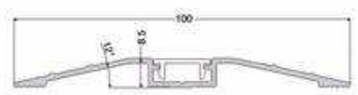

Product Codes

900x900mm L-Shaped Threshold Kit	**25026**
1000x1000mm L-Shaped Threshold Kit	**25027**
1135x770mm L-Shaped Threshold Kit	**25029L/R**
1200x1200mm L-Shaped Threshold Kit	**25030**
1400x900mm L-Shaped Threshold Kit	**25032L/R**
1300x820mm L-Shaped Threshold Kit	**25028L/R**
1500x820mm L-Shaped Threshold Kit	**25031L/R**
2000mm Straight Threshold Kit	**25025**
Made-to-Measure Threshold Kit	**25035**

L/R in the product code denotes whether the kit is Left or Right handed.

FormSafe® Kit

FormSafe® is a unique, pre-formed flexible self-adhesive waterproof membrane. Consisting of a 1mm thick rubberised waterproof layer, incorporating a fabric mesh on one side.

Features & Benefits

+ Cold applied, therefore no heating equipment required and no risk of fire or damage
+ Manufactured from a waterproof material that provides a completely waterproof barrier for peace of mind
+ Effective de-coupling membrane between tiles and floor prevents noise transfer and accommodates expansion/ contraction in the floor or tiles
+ FormSafe can be tiled immediately after fitting significantly reducing wet room installation time
+ Self-adhesive membrane with a paper top layer prevents mess and ensures no foreign bodies adhere to the surface during installation
+ Spans cracks/gaps up to 2.25mm
+ Available in 5m² and 10m² kits which include all required parts
+ Suitable for timber and solid floors, providing flexibility for various site conditions

Product Codes

5m² FormSafe® Kit	**23610**
10m² FormSafe® Kit	**23611**
Wetroom 1mm Butyl Tanking Kit 10m²	**15WTK-10**

Kit includes

1 x Reinforcing tape

1 x Primer

1 x Joining compound

1 x Membrane 5m² or 10m²

Shower Trays

Braddan Trays	69
Sulby Trays	77
Sulby 2	80
Swift Trays	87
Eagle TWO Trays	91
Low Profile Trays	95
Onyx / Onyx Exclusif Trays	101
Onyx Linea Tray	108

You may also need:

Waste Systems 111	Showers 267	Shower Screens 151
Timber 327	Plumbing Fittings 545	Walls & Safety Flooring 299

Braddan

With extensive choice and easy installation, Braddan is a long-term favourite among specifiers, installers and end users.

+ Unique design offers options for a surface mounted, level access or step in shower enclosure
+ Suitable for all installation types with no extra support needed
+ A slip-resistant surface makes them safe to use
+ Integral added strength for extra peace of mind

Braddan Shower Tray

Features & benefits

- The Braddan's unique design can create a full level-access, (except on a concrete floor) surface-mounted or step-in shower enclosure Suitable for all floor types, no under-tray foaming required
- Shower tray creates a visually defined showering area particularly useful for those with visual impairment
- Made from GRP with a slip-resistant textured surface for added safety
- Integral added strength for extra peace of mind
- A central waste position at the end of the tray
- 5 waste options available (gravity and pumped wastes)
- Excellent drainage achieved with 35mm fall inside the tray
- Factory fitted upward pumped waste option is designed for unbreachable floor installations
- Non handed shower tray can be specified for both left or right-handed installations
- Suitable for corner and alcove fittings
- 'Trim-to-length' Kit supplied with 1800mm trays (can be trimmed to 1500mm)
- All trays are supplied with 3 tiling upstands ensuring a watertight seal between the tray and tiles
- Ramp kits available for wheelchair access on surface mounted installations
- Trim to length kit included. Can be cut down to 1500mm to fit in an alcove

For guide to icons, see **page 19**

Specifications

Tray height: 40mm

Material composition: GRP (Glass-reinforced plastic) with the exception of 1200 x 700; 1200 x 820; 1300 x 700, 1420 x 700 and 1800 x 700 trays which are SMC (sheet moulded compound)

Weight limit: 30 stone / 190kg

Fall to Waste: 35mm

Screen Compatibility: Larenco, Level Best, Silverdale® and Standard Screens

Size Options & Product Codes:

Tray size	Tray only	Tray with Gravity Waste (GW50)	Tray with Upward Pump Waste
800 x 800 (GRP)	16522	16522W	16523
820 x 820 (GRP)	16470	16470W	16471
900 x 900mm (GRP)	16472	16472W	16474
1000 x 700mm (GRP)	16000	16000W	16083
1000 x 800mm (GRP)	16528	16528W	16529
1000 x 1000mm (GRP)	16071	16071W	16168
1100 x 800mm (GRP)	16196	16196W	16197
1200 x 650mm (GRP)	16360	16360W	16361
1200 x 700mm (SMC)	16006	16006W	16090
1200 x 760mm (GRP)	16012	16012W	16175
1200 x 820mm (SMC)	16045	16045W	16135
1200 x 900mm (GRP)	16520	16520W	16521
1300 x 700mm (SMC)	16013	16013W	16100
1300 x 820mm (GRP)	16050	16050W	16141
1420 x 700mm (SMC)	16022	16022W	16109
1420 x 820mm (GRP)	16058	16058W	16150
1400 x 900mm (GRP)	16063	16063W	16082
1500 x 700mm (GRP)	16495	19495W	16496
1500 x 820mm (GRP)	16531	16531W	16532
1600 x 700mm (GRP)	16442	16442W	16443
1700 x 700mm (SMC)	16028	16028W	16121
1800 x 700mm (SMC)	16039	16039W	16129
1800 x 820mm (GRP)	16065	16065W	16161
1800 x 900mm (GRP)	16099	16099W	16120

Shower Screen Compatibility

Tray size	Compatible Screens
800 x 800 (GRP)	H SE SM GA E HF M
820 x 820 (GRP)	H GA E HF
900 x 900mm (GRP)	H M SE SM GA E HF OP
1000 x 700mm (GRP)	A C H SM GA E HF M
1000 x 800mm (GRP)	E H SM GA HF M OP
1000 x 1000mm (GRP)	BF C H SE SM GA E HF M OP
1200 x 650mm (GRP)	C H K SE SJ SM SN SU SX GA HF M N
1200 x 700mm (GRP)	B C D H K X SE SJ SM SN SU SX SY GA A E HF M N OP
1200 x 760mm (SMC)	A B C D E H K SE SJ SM SN SU SX GA HF M N
1200 x 820mm (GRP)	B C E5 H SE SJ SM SN SU SX SY GA E HF M N
1200 x 900mm (SMC)	H SJ SM SN SU GA E HF M N OP
1300 x 700mm (SMC)	B C D H J Q U X Y SE SJ SM SN SU SX SY GA A E HF M N OP
1300 x 820mm (GRP)	C E5 H J U Y SE SJ SM SN SU SX SY GA E HF M N OP
1420 x 700mm (SMC)	B H J K Q U X Y SE SJ SM SN SU SX SY GA HF N
1420 x 820mm (GRP)	B H J K U X Y SE SJ SM SN SU SX SY GA HF N
1500 x 700mm (GRP)	B H P TT X Z SE SJ SM SN SU SX SY GA HF N OP
1500 x 820mm (GRP)	H P TT X Z SE SJ SM SN SU SX SY GA HF OP
1700 x 700mm (SMC)	B H J K P TT Y Z SJ SN SU SX GA HF N OP
1800 x 700mm (SMC)	H P TT YF XF Z SJ SN SU SX GA HF OP
1800 x 820mm (GRP)	H P TT YF XF Z SJ SN SU SX GA HF OP

Standard Screens
Sliding Screens
Larenco Glass Screens
Level Best Glass Screens
Silverdale Shower Screens
Opulence Glass Screens

SMC Tray

Sheet molding compound (SMC) is a high-strength composite material comprising primarily a thermosetting resin, filler(s), and fiber reinforcement.

GRP Tray

Glass reinforced plastic (GRP) is made of synthetic resin as main basic material and glass fiber or other product as reinforced material, processed into a solid material by molding and setting.

Tray Dimensions

+ All trays are not handed and can fit either to the left or right
+ Distance from tray edge to waste is 143mm on all tray sizes.

i For more information please see specification on-line at orders.akw-ltd.co.uk

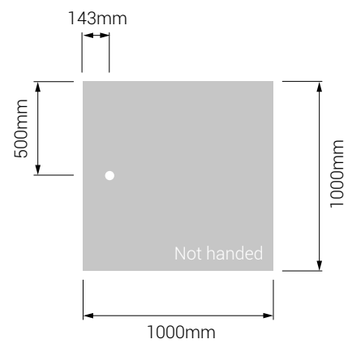

Braddan Waste Options

GW19 19mm Gravity Waste

25125

For details see **page** 118

PW50 Standard Pumped Waste

15mm: 25122

22mm: 25405

For details see **page** 137

GW50 Gravity Waste

25126

For details see **page** 118

Upward Discharge (factory fitted waste)

07130

Braddan Aluminium Ramp Kits

Features & Benefits

+ Allow easy wheelchair access
+ Available for surface-mounted or semi-recessed trays in 20mm and 40mm heights*
+ Supplied for corner or straight access
+ Can be cut to size on site
+ Made-to-measure available

Product Codes

20mm Straight Ramp (length 1800mm)	**25000**
40mm Straight Ramp (length 1800mm)	**25002**
20mm Corner Ramp (suitable for 900 x 900mm tray)	**25001**
40mm Corner Ramp (suitable for 900 x 900mm tray)	**25003**
Made-to-Measure	**25012**

Actual height for 20mm ramp is 19.4mm. Actual height for 40mm ramp is 38.5mm

Maximum external dimensions: 145mm (40mm high) and 74mm (20mm high)

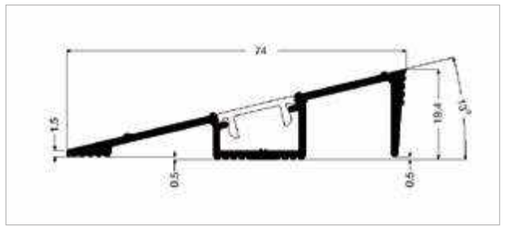

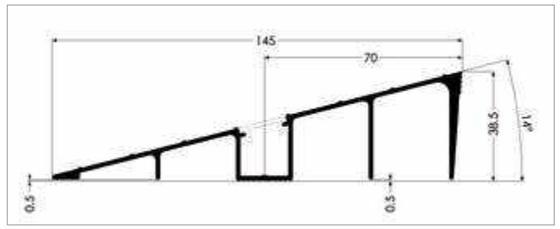

If using vinyl flooring please use made-to-measure kit

Braddan Cut-to-Length Kits

Cut-to-Length kits are supplied with all 1800mm long Braddan trays.

Braddan -1800 x 700

1800 x 700 Trim-to-length Braddan trays are manufactured from SMC and are supplied with a separate end cap. If the trays need to be reduced in size to fit into an alcove the end cap then needs to be sealed to the cut end prior to the tilling flange being fitted.

Braddan -1800 x 820

1800 x 820 Trim-to-length Braddan trays are manufactured from GRP. The trim-to-length kit comprises of two lengths of aluminium extrusion. The first piece is secured to the underside of the cut end of the tray. This is then secured into the wall The second section is then secured over the first and sealed on top of the tray prior to tiling to provide a water tight seal.

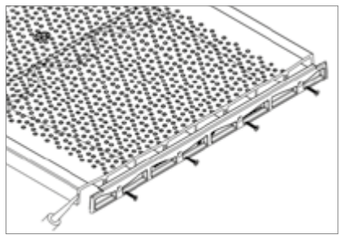

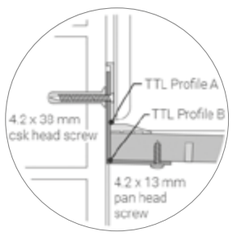

Braddan Shower Tray: Concrete Floor Installation

Braddan installed on concrete floor. Features the AKW Standard 50mm Pumped Waste, alternatively, the factory-fitted AKW Upward Discharge Waste can be specified. Ramp available (40mm).

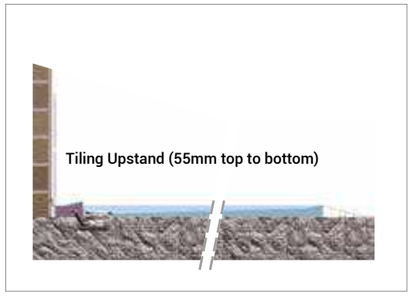

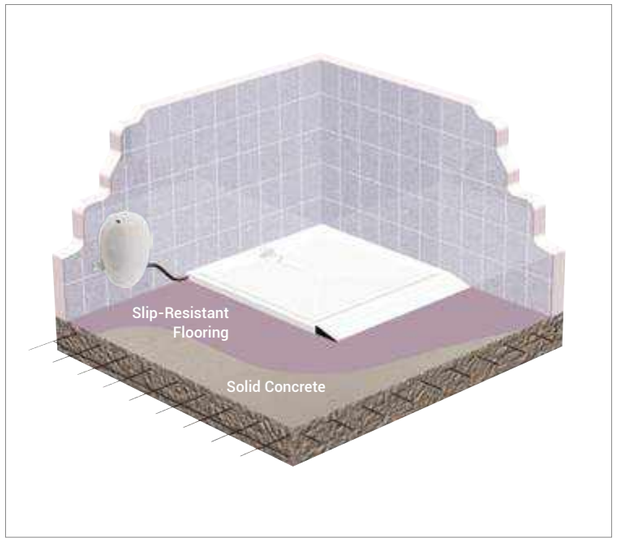

Braddan Shower Tray: Screeded Floor Installation

Braddan installed in a screed on concrete beams or solid concrete using an AKW M11 DigiPump with a factory fitted AKW Upward discharge waste.

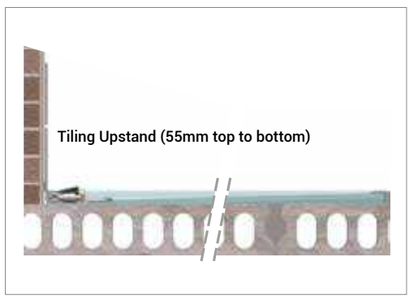

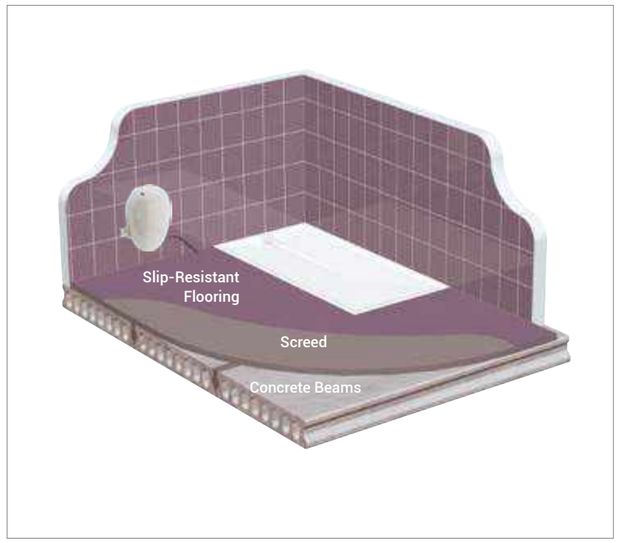

Braddan Shower Tray: Wooden Floor Installation

Braddan inset onto joists in a wooden floor, featuring the AKW 20mm Ramp Kit and the AKW Standard 50mm Gravity Waste.

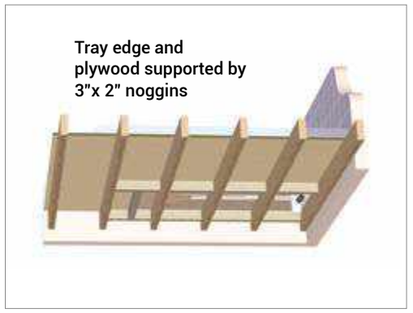

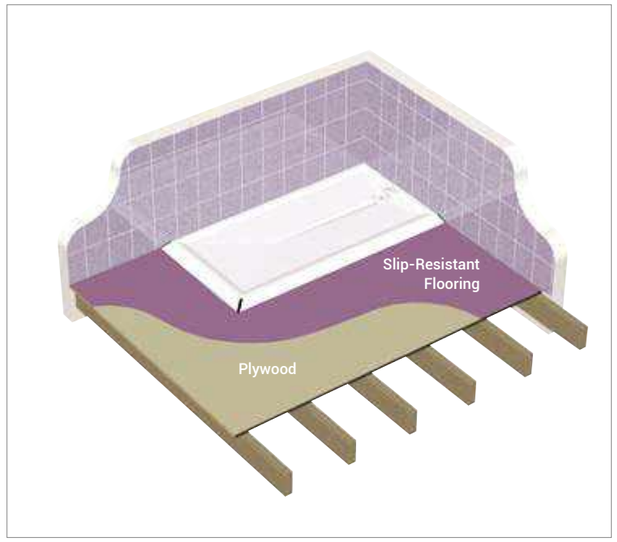

Sulby

Designed for easy installation onto unbreachable floors, the Sulby can go where others can't.

+ Low entry, step-in tray for a defined showering area
+ Achieves gravity drainage on unbreachable floors
+ Excellent drainage (35mm fall inside the tray)
+ Many flexible features make for simple fitting – no excavation needed

Sulby Shower Tray

Features & Benefits

+ Low entry, step-in tray for a defined showering area particularly useful for those with visual impairment
+ Pipework can be concealed within the height of the tray, so it is easier to install and improves the aesthetics of the bathroom
+ Patented, built-in, above floor gravity waste with 8 possible outlet points
+ Slip resistance textured surface for added safety
+ The Sulby tray has an adjustable water trap of 31mm or 38mm
+ Excellent drainage achieved with 35mm fall inside the tray
+ Non handed shower tray can be specified for both left or right-handed installations
+ Trim-to-length kit supplied with Sulby 1800mm trays
+ Optional pipe duct kit available to avoid the re-routing of existing pipework
+ Tiling upstands supplied for corner or alcove installations
+ No under-tray foaming required
+ Choice of corner, side and end ramps for easy access

For guide to icons, see **page 19**

Specifications

Tray height: Sulby 90mm, Sulby 2 110mm
Material composition: GRP (Glass-Reinforced Plastic) fibreglass hand lay-up
Weight limit: 30 stone / 190kg
Fall to Waste: 35mm
Gravity Waste: Built in filter, 124mm deep below mounting surface, 50mm water trap depth (seal)
50mm threaded waste fitting, Limited to 7 litres per minute
Screen Compatibility: Silverdale® and Standard Screens

Size Options & Product Codes:

Tray size	Tray with Built in Gravity Waste
820 x 820mm (90mm high)	17232
900 x 900mm (90mm high)	17231
1000 x 1000mm (90mm high)	17055
1200 x 700mm (90mm high)	17000
1200 x 760mm (90mm high)	17006
1200 x 820mm (90mm high)	17029
1300 x 700mm (90mm high)	17007
1300 x 700mm (110mm high)	17202
1300 x 820mm (90mm high)	17034
1420 x 700mm (90mm high)	17016
1420 x 700mm (110mm high)	17201
1420 x 820mm (90mm high)	17042
1800 x 700mm (90mm high)	17023
1801 x 820mm (90mm high)	17049

Shower Screen Compatibility

Tray size	Compatible Screens
820 x 820 (90mm high)	E H HF GA SE SM E HF
900 x 900mm (90mm high)	E H HF M GA SE SM E HF M OP
1000 x 1000mm (90mm high)	BF C E H HF M GA SE SM E HF M OP
1200 x 700mm (90mm high)	A B C D E H HF K M N GA SE SJ SM SN SU SX SY A E HF M N OP
1200 x 760mm (90mm high)	A B C D E H HF K M N GA SE SJ SM SN SU SX SY A E HF M N
1200 x 820mm (90mm high)	B C E E5 H HF M N GA SE SJ SM SN SU SX SY E HF M N
1300 x 700mm (90 & 110mm high)	A B C E H HF J M N Q U X Y GA SE SJ SM SN SU SX SY A E HF M N OP
1300 x 820mm (90mm high)	C E E5 H HF J M N U Y GA SE SJ SM SN SU SX SY E HF M N
1420 x 700mm (90 & 110mm high)	B H HF J K N Q U X Y GA SE SJ SM SN SU SX SY HF N
1420 x 820mm (90mm high)	B H HF J K N U X Y GA SE SJ SM SN SX SY HF N
1800 x 700mm (90mm high)	H HF P TT YF XF Z GA SJ SN SU SX HF OP
1800 x 820mm (90mm high)	H HF P TT YF XF Z GA SJ SN SU SX HF

Standard Screens
Sliding Screens
Larenco Glass Screens
Level Best Glass Screens
Silverdale Shower Screens
Opulence Glass Screens

Tray Dimensions

+ All trays are not handed and can fit either to the left or right
+ Distance from tray edge to waste is 143mm on all tray sizes

i For more information please see specification on-line at orders.akw-ltd.co.uk

TRAYS

Sulby 2

A low entry, step-in shower tray, designed for easy installation onto unbreachable floors, 110mm high for use with 90mm gravity or pumped wastes.

For guide to icons, see **page 19**

Features & Benefits

- Low entry, step-in tray for a defined showering area particularly useful for those with visual impairment
- Easy access for all
- Pipework can be concealed within the height of the tray, so it is easier to install and improves the aesthetics of the bathroom
- Slip resistance textured surface for added safety
- Waste concealed within the height of the tray, therefore, there is no need to breach the floor
- Excellent 19 lpm drainage (25404 waste)
- Compatible with dry wastes
- Can be fitted with PW90 waste for pumped solution
- Quick and easy installation
- No need to excavate the floor
- Ensures a watertight fixing to the wall
- Can be installed on timber and concrete floors

Tray Dimensions

- All trays are non-handed and can fit either to the left or right
- Distance from tray edge to centre of the waste is 100mm on all tray sizes.

For more information please see specification on-line at orders.akw-ltd.co.uk

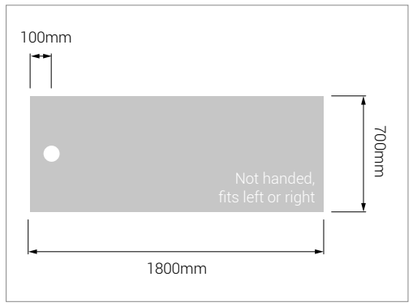

TRAYS

Size Options & Product Codes:

Tray size	Tray only	Tray with Gravity Waste (GW90)
800 x 800mm (110mm high)	17242	17242W
1000 x 700mm (110mm high)	17243	17243W
1000 x 1000mm (110mm high)	17248	17248W
1200 x 700mm (110mm high)	17244	17244W
1200 x 800mm (110mm high)	17249	17249W
1200 x 900mm (110mm high)	17240	17240W
1300 x 700mm (110mm high)	17245	12745W
1300 x 800mm (110mm high)	17250	17250W
1400 x 800mm (110mm high)	17251	17251W
1420 x 700mm (110mm high)	17241	17241W
1500 x 700mm (110mm high)	17246	17246W
1700 x 700mm (110mm high)	17247	17247W
1800 x 700mm (110mm high)	17252	17252W
1800 x 800mm (110mm high)	17253	17253W

Shower Screen Compatibility

Tray size	Compatible Screens
800 x 800 (110mm high)	E H HF M GA SE E HF M
1000 x 700mm (110mm high)	A C E H HF M GA SM A E HF M
1000 x 1000mm (110mm high)	BF C E H HF M GA SE SM E HF M OP
1200 x 700mm (110mm high)	A B C D E H HF K M N X GA SE SJ SM SN SU SX SY A E HF M N OP
1200 x 800mm (110mm high)	B C E E5 H HF M N GA SE SJ SM SN SU SX SY E HF M N OP
1200 x 900mm (110mm high)	E H HF M N GA SJ SM SN SU E HF M N OP
1300 x 700mm (110mm high)	A B C D E H HF K M N Q U X Y GA SE SJ SM SN SU SX SY A E HF M N OP
1300 x 800mm (110mm high)	C E E5 H HF J M N U Y GA SE SJ SM SN SU SX SY E HF M N OP
1400 x 800mm (110mm high)	B H HF J K N U X Y GA SE SJ SM SN SX SY HF N OP
1420 x 700mm (110mm high)	B H HF J K N Q U X Y GA SE SJ SM SN SU SX SU B HF N X Y
1500 x 700mm (110mm high)	B H HF N X GA SE SJ SM SN SU SX HF N TT OP
1700 x 700mm (110mm high)	B H HF J K N Y GA SJ SN SU SX HF N TT Y OP
1800 x 700mm (110mm high)	H HF P TT YF XF Z GA SJ SN SU SX HF OP
1800 x 800mm (110mm high)	H HF P TT YF XF Z GA SJ SN SU SX HF OP

Standard Screens
Sliding Screens
Larenco Glass Screens
Level Best Glass Screens
Silverdale Shower Screens
Opulence Glass Screens

Sulby: Factory-Fitted Waste Installation

ABS cover lifts off to expose waste

Trap and strainer can be removed to give clear access for rodding

A stop end is supplied for fitting to the unused waste outlet

Sulby: Ramp Options

Sulby ramps are designed to be removed when not in use, so they are not fixed in position.

Features & Benefits

- Straight and corner ramps, or a step is available
- Ramp designed to suit 90mm high Sulby shower trays only
- Step can be used with 110mm high Sulby shower trays

Product Codes

Straight Sulby Ramp: 770(w) x 480(d) x 90(h)mm	**25009**
Corner Sulby Ramp: 770(w) x 630(d) x 90(h)mm	**25008**
Sulby Step: 700(w) x 300(d) x 45(h)mm	**25007**

Please note: Gradient for ramps is 1:6. Dimensions are outside dimensions.

Sulby 2: Waste Options

PW90 Pumped Waste

15mm: 25105

22mm: 25406

For details see **page** 138

Low Depth GW90

25404

For details see **page** 120

DW90 Low Depth Dry Shower Waste

25492-UK

For details see **page** 135

GW90 Metal Topped 90mm Diameter Waste

25434

For details see **page** 131

Sulby: Concrete Floor Installation

All AKW Sulby trays have a built-in 31mm gravity waste, set above floor level.

Tray fitted with waste on left

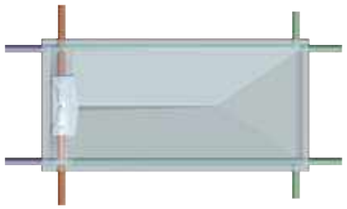

Tray fitted with waste on right

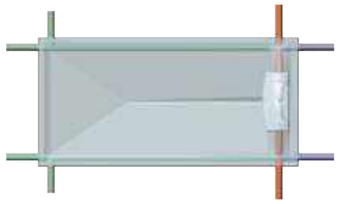

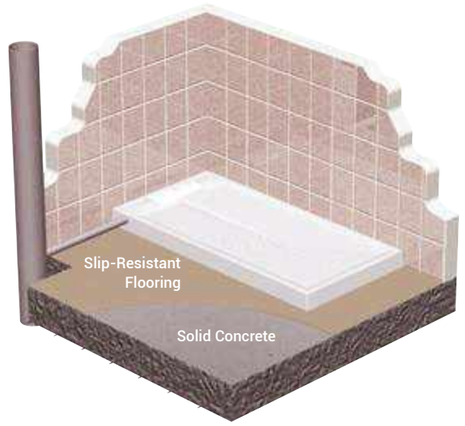

Sulby 2: Concrete Floor Installation

Tray fitted with waste on left

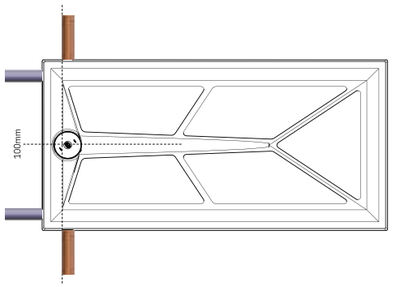

Tray fitted with waste on right

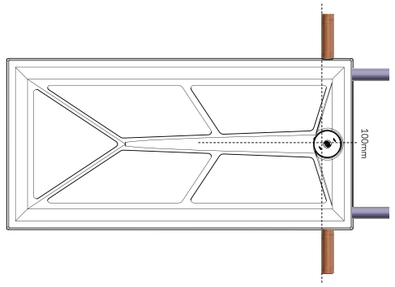

Swift

A Swift level access shower tray is set flush into the bathroom floor when fitted and has no height difference between the tray edge and the bathroom floor when installed, offering an unrestricted walk in shower solution for people with restricted mobility or wheelchair users who require a bathroom adaptation with no steps or ramps to negotiate.

Exclusively incorporating TRUESEAL2 floor edge profile which allows vinyl safety flooring to be hot seam welded directly to the Swift shower tray, creating a perfect watertight joint.

+ Provides a practical, corner entry level access shower for users with mobility difficulties who require a walk in shower or wheelchair accessible shower
+ Installation friendly, no need for intricate corner seam welds
+ Hot seam weld the vinyl safety flooring directly onto the tray's unique TRUESEAL2 floor edge profile, creating a perfect watertight joint
+ Shower tray, half height shower doors and a shower seat or grab rail can be installed during one site visit, leaving the flooring to be fitted afterwards
+ Can be used with floor tiles by omitting TRUESEAL2
+ Lifetime warranty

SWIFT Shower Tray

Level access shower tray range using TRUESEAL2 floor edge profile.

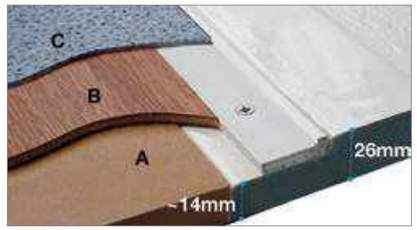

A - Floorboard or concrete flooring
B - ¼" plywood C - 2mm vinyl sheet flooring

For guide to icons, see **page 19**

Features & Benefits

+ Provides a practical, corner entry showering solution for users with mobility difficulties or requiring wheelchair access
+ Anti-slip surface for an assured underfoot grip
+ Installation friendly, no need for intricate corner seam welds
+ Hot seam weld the vinyl sheet flooring directly onto the tray's unique TRUESEAL2 floor edge profile, creating a perfect watertight join
+ Only requires the removal of ~14mm of flooring, the equivalent of a floorboard, (apart from the trap area where additional space is required)
+ Locate in wooden or solid floor settings, minimal need for additional support under the tray required
+ Shower tray, enclosure & ancillary equipment can be installed during one site visit, leaving the flooring to be fitted afterwards
+ 14mm tiling lip is watertight & will accommodate wallboards or wall tiles
+ Can be used with floor tiles by omitting TRUESEAL2, please choose when ordering
+ Lifetime warranty
+ Handed & non-handed tray options available

Specifications

Tray height: Level access

Material composition: GRP

Weight limit: 42 stone / 270kg

Tray Dimensions

+ Square trays are non-handed
+ Rectangular trays are handed left or right
+ Distance from tray edge to centre of waste is as follows:
  + All square trays are 300mm
  + 1290mm trays are 645mm
  + 1295mm trays are 650mm
  + 1345mm trays are 650mm
  + 1400mm trays are 700mm

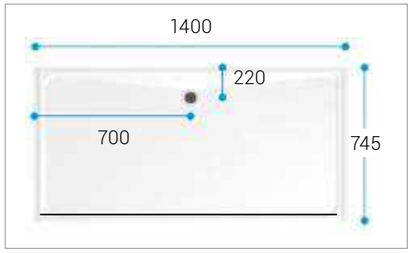

For more information please see specification on-line at orders.akw-ltd.co.uk

Size Options & Product Codes:

Tray size	Tray only	Tray only, no TRUESEAL 2 , no waste	Tray with Gravity Waste
795 x 795mm	SWIF795NW	SWIF795NTNW	SWIF795
945 x 945mm	SWIF945NW	SWIF945NTNW	SWIF945
1045 x 1045mm	SWIF1045NW	SWIF1045NTNW	SWIF1045
1095 x 795mm LH	SWIF1095LHNW	SWIF1095LHNTNW	SWIF1095LH
1095 x 795mm RH	SWIF1095RHNW	SWIF1095RHNTNW	SWIF1095RH
1245 x 1245mm	SWIF1245NW	SWIF1245NTNW	SWIF1245
1295 x 745mm LH	SWIF1295LHNW	SWIF1295LHNTNW	SWIF1295LH
1295 x 745mm RH	SWIF1295RHNW	SWIF1295RHNTNW	SWIF1295RH
1345 x 845mm LH	SWIF1345LHNW	SWIF1345LHNTNW	SWIF1345LH
1345 x 845mm RH	SWIF1345RHNW	SWIF1345RHNTNW	SWIF1345RH
1345 x 945mm LH	SWIF1345x945LHNW	SWIF1345x945LHNTNW	SWIF1345x945LH
1345 x 945mm RH	SWIF1345x945RHNW	SWIF1345x945RHNTNW	SWIF1345x945RH
1400 x 745mm	SWIF1400LHNW	SWIF1400LHNTNW	SWIF1400LH

Tray size	Tray with Gravity Waste, no TRUESEAL 2	Tray with Pumped Waste	Trays with Pumped Waste, no TRUESEAL 2
795 x 795mm	SWIF795NT	SWIF795PW	SWIF795NTPW
945 x 945mm	SWIF945NT	SWIF945PW	SWIF945NTPW
1045 x 1045mm	SWIF1045NT	SWIF1045PW	SWIF1045NTPW
1095 x 795mm LH	SWIF1095LHNT	SWIF1095LHPW	SWIF1095LHNTPW
1095 x 795mm RH	SWIF1095RHNT	SWIF1095RHPW	SWIF1095RHNTPW
1245 x 1245mm	SWIF1245NT	SWIF1245PW	SWIF1245NTPW
1295 x 745mm LH	SWIF1295LHNT	SWIF1295LHPW	SWIF1295LHNTPW
1295 x 745mm RH	SWIF1295RHNT	SWIF1295RHPW	SWIF1295RHNTPW
1345 x 845mm LH	SWIF1345LHNT	SWIF1345LHPW	SWIF1345LHNTPW
1345 x 845mm RH	SWIF1345RHNT	SWIF1345RHPW	SWIF1345RHNTPW
1345 x 945mm LH	SWIF1345x945LHNT	SWIF1345x945LHPW	SWIF1345x945LHNTPW
1345 x 945mm RH	SWIF1345x945RHNT	SWIF1345x945RHPW	SWIF1345x945RHNTPW
1400 x 745mm	SWIF1400NT	SWIF1400PW	SWIF1400NTPW

Shower Screen Compatibility

Tray size	Compatible Screens
795 x 795mm	H HF GA HF
945 x 945mm	H HF GA HF Y
1045 x 1045mm	H HF GA HF
1095 x 795mm	H HF GA HF
1245 x 1245mm	H HF GA HF
1295 x 745mm	H HF GA HF
1345 x 845mm	H HF GA HF
1345 x 945mm	H HF GA HF
1400 x 745mm	H HF GA HF

Standard Screens **Sliding Screens** **Larenco Glass Screens**
Level Best Glass Screens **Silverdale Shower Screens** **Opulence Glass Screens**

Eagle TWO

Eagle TWO level access, bath replacement shower trays can be cut to length to fit a space once occupied by a bath. Set flush into the bathroom floor when fitted and with no height difference between the tray edge and the bathroom floor, Eagle TWO shower trays provides an unrestricted walk in shower solution for people with restricted mobility or wheelchair users who require a bathroom adaptation with no steps or ramps for the user to negotiate.

Exclusively incorporating TRUESEAL2 floor edge profile which allows vinyl safety flooring to be hot seam welded directly to the Swift shower tray, creating a perfect watertight joint.

+ Perfect showering solution where a bathtub is no longer practical for users with mobility difficulties or requiring wheelchair access
+ Can be cut to length to fit exactly where a bathtub once was
+ Hot seam weld vinyl safety flooring directly onto the tray's unique TRUESEAL2 floor edge profile, creating a perfect watertight joint
+ Shower tray, half height shower doors and a shower seat or grab rail can be installed during one site visit, leaving the flooring to be fitted afterwards
+ Can be used with floor tiles by omitting TRUESEAL2
+ Lifetime warranty

EAGLE TWO Shower Tray

Bath replacement, cut to length, level access shower tray range using TRUESEAL2.

+ A showering solution where a bathtub is no longer practical for users with mobility difficulties or requiring wheelchair access.
+ Anti-slip surface for an assured underfoot grip.
+ Hot seam weld the vinyl sheet flooring directly onto the trays unique TRUESEAL2 floor edge profile, creating a perfectly secure watertight join.
+ Requires the removal of ~14mm of flooring, the equivalent of a floorboard, (apart from the trap area where additional space is required).
+ Shower tray, enclosure & any ancillary equipment can be installed during one site visit, leaving the flooring to be fitted afterwards.
+ 14mm tiling lip is watertight & will accommodate wallboards or wall tiles.
+ With three tiling lips & a central waste position. Either end of the tray can be cut to determine the trays hand for easier installation.
+ Cut to length from original length of 1850mm to fit exactly into the space left by a bath. End plate supplied to conceal the cut end when installed between three walls.
+ Can be used with floor tiles by omitting TRUESEAL2, please choose when ordering.
+ Lifetime warranty.
+ Trays not handed.

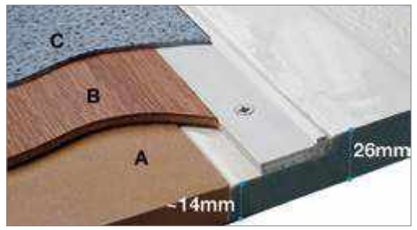

A - Floorboard or concrete flooring
B - ¼" plywood C - 2mm vinyl sheet flooring

For guide to icons, see **page 19**

Specifications

Tray height: Level access
Material composition: GRP
Weight limit: 42 stone / 270kg
Cut length minimum size: 1500mm

Size Options & Product Codes:

Tray size	Tray only code	Tray only, no TRUESEAL 2, no waste	Tray with gravity waste
1850 x 745mm	ET745NW	ET745NTNW	ET745
1850 x 845mm	ET845NW	ET845NTNW	ET845

Tray size	Tray with gravity waste, no TRUESEAL 2	Tray with pumped waste	Tray with pumped waste, no TRUESEAL 2
1850 x 745mm	ET745NT	ET745PW	ET745NTPW
1850 x 845mm	ET845NT	ET845PW	ET845NTPW

Shower Screen Compatibility

Tray size	Compatible Screens
1850 X 745mm	H HF J M N U Z GA SJ SM SN SU E HF M N
1850 X 845mm	H HF J M N U Z GA SJ SM SN SU E HF M N

Standard Screens **Sliding Screens**
Level Best Glass Screens **Silverdale Shower Screens**

Tray Dimensions

+ All trays are not handed and can fit either to the left or right
+ Distance from tray edge to the centre of the waste can be see on the diagram

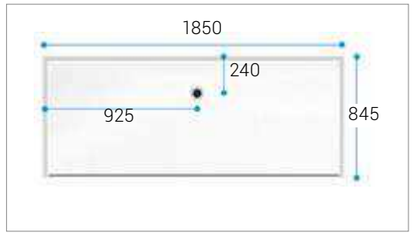

For more information please see specification on-line at orders.akw-ltd.co.uk

Low Profile

Suited to wooden floors and one of the easiest trays to install, Low Profile can be fitted for either level or low-level access.

+ At just 32mm high, this tray is ideal for where level or low-level access is needed
+ Offset waste position to avoid joints
+ Excellent water drainage with 25mm fall
+ Reinforced with steel sections for extra strength
+ Slip-resistant surface for added safety

Low Profile Shower Tray

Features & Benefits

+ At just 32mm high, the Low Profile tray is ideal for where level or low-access is needed
+ Shower tray creates a visually defined showering area particularly useful for those with visual impairment
+ Slip-resistant textured surface for added safety
+ Reinforced with steel sections for extra strength, therefore no under tray foaming is required
+ Excellent water drainage with a 25mm fall inside the tray
+ Non-handed shower tray can be specified for both left or right-handed installations
+ Easy installation, thanks to offset waste position to avoid joists
+ 1800mm trays supplied with a trim to length kit
+ Three separate tiling upstands supplied

For guide to icons, see **page 19**

Please note: Not recommended for use with pumped wastes

Specifications

Tray height: 32mm

Material composition: GRP (Glass-Reinforced Plastic) fibreglass hand lay-up

Weight limit: 30 stone / 190kg

Fall to Waste: 25mm

Screen Compatibility: Larenco, Opulence Level Best, Silverdale® and Standard Screens

Size Options & Product Codes:

Tray size	Tray only	Tray with Gravity Waste (GW90)
900 x 900mm	18063	18076
1000 x 1000mm	18055	18174
1200 x 700mm	18000	18070
1200 x 760mm	18006	18071
1200 x 820mm	18029	18170
1300 x 700mm	18007	18072
1300 x 820mm	18034	18171
1420 x 700mm	18016	18073
1420 x 820mm	18042	18172
1500 x 700mm	18062	18075
1800 x 700mm	18023	18074
1800 x 820mm	18049	18173

Shower Screen Compatibility

Tray size	Compatible Screens
900 x 900mm	E H HF M GA SE SM E HF
1000 x 1000mm	BF C E H HF N GA SE SM E HF M OP
1200 x 700mm	A B C D E H HF K M N GA SE SJ SM SN SX SY A E HF M N OP
1200 x 760mm	A B C D E H HF K M N GA SE SJ SM SN SU SX A HF M N
1200 x 820mm	BF C E E5 HF HF M N GA SE SJ SM SN SU SX SY E HF M N
1300 x 700mm	A B C D E H HF J M N Q U X Y GA SE SJ SM SN SU SX SY A E HF M N OP
1300 x 820mm	C E E5 H HG J M N U Y GA SE SJ SM SN SU SX SY E HF M N
1420 x 700mm	BF HF HF J K N Q U X Y GA SE SJ SM SN SU SX SY HF N
1420 x 820mm	H HF J K N U X Y GA SE SJ SM SN SU SX SY
1500 x 700mm	B H HF N P TT X Z GA SE SJ SM SN SU SX HF N
1800 x 700mm	H HF P TT XF YF Z GA SJ SN SU SX HF OP
1800 x 820mm	H HF P TT XF YF Z GA SJ SN SU SX HF OP

Standard Screens | Sliding Screens | Larenco Glass Screens
Level Best Glass Screens | Silverdale Shower Screens | Opulence Glass Screens

Tray Dimensions

+ All trays are non-handed and can fit either to the left or right
+ Distance from tray edge to centre of the waste varies on each tray,

For more information please see specification on-line at orders.akw-ltd.co.uk

Low Profile: Waste Options

GW90 90mm Diameter Gravity Waste

25120

For details see **page** 119

Low Depth GW90

25404

For details see **page** 120

DW90 Low Depth Dry Shower Waste

25492-UK

For details see **page** 135

GW90 Metal Topped 90mm Diameter Waste

25434

For details see **page** 131

Low Profile Shower Tray: Wooden Floor Installation

Low Profile trays installed for complete level access in a wooden floor. Non-handed with offset waste position the tray can be rotated 180° to miss the joists on two planes.

Tray to be supported by timber supports

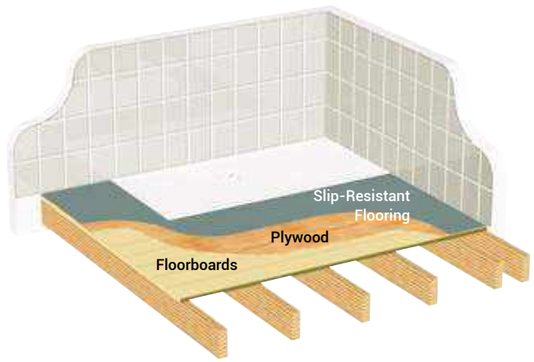

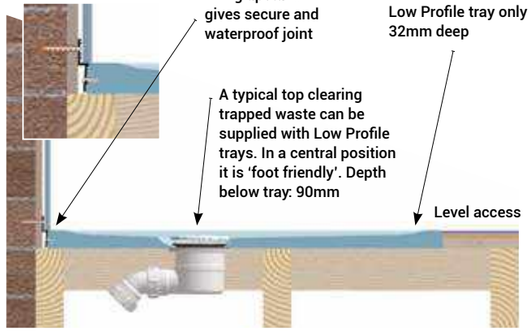

Please Note: Trays are shown in colour for illustrative purposes only.
Low profile trays are not designed for use with pumped wastes.

Onyx
Onyx Exclusif

Contemporary, lightweight SMC shower tray, designed in-house by AKW, reflecting the latest trends in industrial design.

+ Available in white and black to create a bespoke, stylish environment
+ Contemporary slate finish helps with drainage and slip resistance
+ Easy installation with this lightweight tray (less than 25kg)
+ Made from SMC (Sheet Moulding Compound), making them exceptionally strong
+ Can be recessed or surface mounted

Onyx Shower Tray

Onyx Shower Tray combines sleek lines with incredible strength, supporting up to 31.5 stone/ 200kg, and offering low or level access.

Features & Benefits

- Removable waste plate allows easy access for waste cleaning
- 26mm low profile tray can be recessed for level access or surface mounted
- Shower tray creates a visually defined showering area particularly useful for those with visual impairment
- Contemporary design
- Slip resistant textured surface for added safety
- Strong, non-deformable webbed structure ensures excellent shock and impact resistance, as well as easy installation
- Easy installation, lightweight (under 25kg)
- Concealed shallow depth waste (54mm under the tray)
- Colour and finish coordinated waste cover with slots to improve water flow
- Easy installation
- Available in a choice of white and black to suit customer preference
- Compatible with Larenco, Opulence, Level Best, Silverdale and Standard carer screens

For guide to icons, see **page 19**

Specifications

Tray height: 26mm
Material composition: SMC (Sheet Moulding Compound)
Weight limit: 31.5 stone / 200kg
Fall to Waste: 16mm
Screen Compatibility: Larenco, Level Best, Silverdale® and Standard Screens
RAL Colours: white (RAL9003) and black (RAL7021)

Onyx Exclusif Shower Tray

With its contemporary aesthetic, the Onyx Exclusif Shower Tray provides a stylish yet strong showering solution, with a maximum capacity of 31.5 stone / 200kg and a variety of sizes available to accommodate wheelchair users and carers.

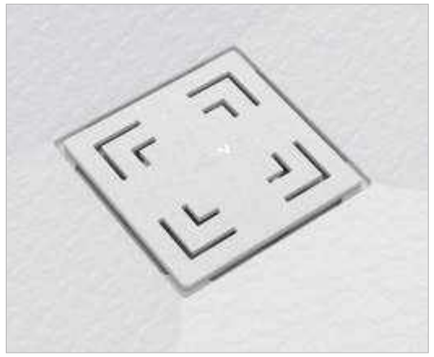

Waste Cover - Zinc Die-Cast (optional extra)

Features & Benefits

- 26mm shallow depth tray can be installed above the floor for low-level access or recessed into it to enable level-access showering
- Manufactured from SMC (Sheet-Moulding Compound) for strength and durability
- Contemporary textured finish offers a reliably high level of slip resistance for reassurance when getting in/out of the shower
- Rigid, webbed structure on the underside of the tray reinforces strength and provides excellent shock and impact resistance
- Lightweight materials ensure quick and easy installation
- Can support up to 31.5st (200kg), suitable for wheelchair users or those with carers
- Available in a choice of white and black to suit customer preference
- Compatible with Larenco, Opulence, Level Best, Silverdale and Standard carer screens

For guide to icons, see **page 19**

Specifications

Made from GRP (Glass Reinforced Plastic) using the SMC process
Weight limit: 31.5st / 200kg
Lightweight, under 25kg
Trays offered in white (18 sizes) or black (13 sizes)
Matching waste cover included
Optional waste cover available
Concealed waste positioned at one end
Can be trimmed to within 150mm of waste
Shallow depth waste available (54mm under the tray)
High water flow rate (up to 30 lpm)
Also designed for use with the DW90 dry waste or the PW90 pumped waste

Size Options & Product Codes:

	Onyx		Onyx Exclusif	
Tray Size	**White Tray Only**	**Black Tray Only**	**White Tray Only**	**Black Tray Only**
800 x 800mm	11886	11890	12820WH	12820BK
900 x 900mm	11887	11891	12821WH	12821BK
1000 x 700mm	11888	–	12822WH	–
1000 x 800mm	11851	11852	12823WH	12823BK
1200 x 700mm	11889	–	12824WH	–
1200 x 800mm	11853	11854	12825WH	12825BK
1200 x 900mm	11855	11856	12826WH	12826BK
1400 x 700mm	11987	–	12827WH	–
1400 x 800mm	11871	11872	12828WH	12828BK
1400 x 900mm	11873	11874	12829WH	12829BK
1600 x 700mm	11869	–	12830WH	–
1600 x 800mm	11857	11858	12831WH	12831BK
1600 x 900mm	11859	11860	12832WH	12832BK
1700 x 700mm	11983	–	12833WH	–
1700 x 800mm	11861	11862	12834WH	12834BK
1700 x 900mm	11863	11864	12835WH	12835BK
1800 x 800mm	11865	11866	12836WH	12836BK
1800 x 900mm	11867	11868	12837WH	12837BK
2000 x 1000mm	11894	–	–	–

Optional extra:

Onyx Exclusif Waste Cover - Chrome Plated Zinc Die-cast 21-016-207

Shower Screen Compatibility

Tray size	Compatible Screens
800 x 800mm	H SE SM GA SE E HF M LAR
900 x 900mm	H M GA SE SM E HF LAR OP
1000 x 700mm	A C H GA SM E HF M LAR
1000 x 800mm	E H GA SM HF M LAR OP
1200 x 700mm	H GA SJ SM SN SU E HF M N LAR OP
1200 x 800mm	B C E E5 HF GA SE SX SY E HF LAR OP
1200 x 900mm	C E5 H J U Y GA SE SJ SM SN SU SX SY E HF M N LAR OP
1400 x 700mm	BF HF HF J K N Q U X Y GA SE SJ SM SN SU SX SY HF N LAR
1400 x 800mm	B H J K U X Y GA SE SJ SM SN SU SX SY HF N LAR OP
1400 x 900mm	BW E5 H HF GA HF LAR OP
1600 x 700mm	GA LAR OP
1600 x 800mm	GA LAR OP
1600 x 900mm	GA LAR OP
1700 x 700mm	Y GA SJ SM SN SX LAR OP
1700 x 800mm	GA SJ SM SN SX LAR OP
1700 x 900mm	GA SJ SM SN SX LAR OP
1800 x 800mm	Z GA SJ SM SN SX LAR OP
1800 x 900mm	Z GA SJ SM SN SX LAR OP
2000 x 1000mm	GA

Standard Screens | Sliding Screens | Larenco Glass Screens

Level Best Glass Screens | Silverdale Shower Screens | Opulence Glass Screens

Onyx Waste Options

GW90 Onyx Waste

25694

For details see **page** 119

DW90 Waste for Onyx Tray

25696-UK

For details see **page** 139

PW90 22mm Pumped Waste

25495

For details see **page** 138

Waste must be ordered with the Onyx Tray

Onyx Leg Kits

Onyx Tray Leg Kit Product Codes:

Dimensions	Code (without skirt)	White	Black
800 x 800	**11895**	11895WH	11895BK
900 x 900	**11896**	11896WH	11896BK
1000 x 700	**11897**	11897WH	11897BK
1000 x 800	**11898**	11898WH	11898BK
1200 x 700	**11899**	11899WH	11899BK
1200 x 800	**11990**	11990WH	11990BK
1200 x 900	**11991**	11991WH	11991BK
1400 x 700	**11986**	11986WH	11986BK
1400 x 800	**11992**	11992WH	11992BK
1400 x 900	**11993**	11993WH	11993BK
1600 x 700	**11984**	11984WH	–
1600 x 800	**11994**	11994WH	11994BK
1600 x 900	**11995**	11995WH	11995BK
1700 x 700	**11980**	11980WH	–
1700 x 800	**11996**	11996WH	11996BK
1700 x 900	**11997**	11997WH	11997BK
1800 x 800	**11998**	11998WH	11998BK
1800 x 900	**11999**	11999WH	11999BK
2000 x 1000	**11989**	11989WH	–

Legs:

Onyx Tray Leg Kit x 5 Legs	16-017-343
Onyx Tray Leg Kit x 8 Legs	16-017-344
Onyx Tray Leg Kit x 11 Legs	16-017-345

LIFETIME WARRANTY

Onyx Exclusif Ramp

Designed to work with Onyx Exclusif trays, this aethetically pleasing white SMC ramp allows wheelchairs users or users with limited mobility easily anvigate the low 26mm threshold of the Onyx Exclsif tray.

Features & Benefits

- Suitable for wheelchair use, tested to 200kg / 31st weight limit
- Manufactured from SMC for strength and longevity
- Can be trimmed on-site to suit requirements
- Slip-resistant slate surface finish to match Onyx Exclusif tray
- Lightweight material
- Lifetime warranty for peace of mind
- Easy installation and can be installed retrospectively
- Finish consistent with the Onyx Exclusif tray
- Corner and alcove option available
- Hidden fixings improve aesthetics, with colour matched screw caps

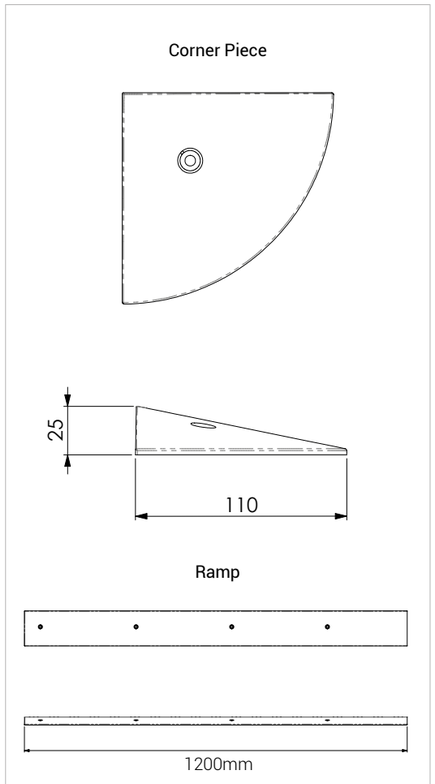

Specifications

Tray height: 26mm
Material composition: SMC (Sheet Moulding Compound)
Screen Compatibility: Larenco, Level Best, Silverdale® and Standard Screens
RAL Colours: white (RAL9003)

Onyx Linea Shower Tray

With its art deco inspired Linea waste, the Onyx Linea shower tray offers superior strength with a maximum capacity of 39st (247kg), and contemporary styling with a luxurious slip-resistant, stone-effect finish.

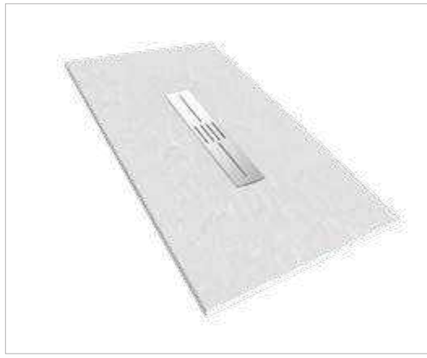

Features & Benefits

- One of our shallowest trays at 26mm Onyx Linea can be installed above the floor or recessed to enable level-access showering
- Manufactured from SMC (Sheet-Moulding Compound) for strength and durability
- Lightweight, under 25kg
- Contemporary stone finish offers a reliably high level of slip resistance for reassurance when getting in/out of the shower
- Rigid, webbed structure on the underside of the tray reinforces strength and provides excellent shock and impact resistance
- Lightweight materials ensure quick and easy installation
- Can support up to 39st (247kg), suitable for wheelchair users or those with carers
- Compatible with Larenco, Level Best, Silverdale & Standard Screens
- Available in 16 sizes to suit your install requirements

Specifications

Tray height: 26mm
Material composition: SMC (Sheet Moulding Compound)
Weight limit: 39 stone / 200kg
Fall to Waste: 16mm
Screen Compatibility: Larenco, Level Best, Silverdale® and Standard Screens
RAL Colours: white (RAL9003), grey (RAL7036) and black (RAL7021)

For guide to icons, see **page 19**

Size Options & Product Codes:

Tray size	Tray only
1000 X 700mm	23980WH
1000 x 800mm	23982WH
1200 x 700mm	23981WH
1200 x 800mm	23983WH
1200 x 900mm	23984WH
1400 x 700mm	23985WH
1400 x 800mm	23987WH
1400 x 900mm	23989WH
1600 x 700mm	23986WH
1600 x 800mm	23988WH
1600 x 900mm	23990WH
1700 x 700mm	23991WH
1700 x 800mm	23992WH
1700 x 900mm	23994WH
1800 x 800mm	23993WH
1800 x 900mm	23995WH

Shower Screen Compatibility

Tray size	Compatible Screens
1000 x 700mm	A C H GA SM E HF M LAR
1000 x 800mm	E H GA SM HF M LAR
1200 x 700mm	H GA SJ SM SN SU E HF M N LAR
1200 x 800mm	B C E E5 HF GA SE SX SY E HF LAR
1200 x 900mm	C E5 H J U Y GA SE SJ SM SN SU SX SY E HF M N LAR
1400 x 700mm	BF HF HF J K N Q U X Y GA SE SJ SM SN SU SX SY HF N LAR
1400 x 800mm	B H J K U X Y GA SE SJ SM SN SU SX SY HF N LAR
1400 x 900mm	BW E5 H HF GA HF LAR
1600 x 700mm	GA LAR
1600 x 800mm	GA LAR
1600 x 900mm	GA LAR
1700 x 700mm	Y GA SJ SM SN SX LAR
1700 x 800mm	GA SJ SM SN SX LAR
1700 x 900mm	GA SJ SM SN SX LAR
1800 x 800mm	Z GA SJ SM SN SX LAR
1800 x 900mm	Z GA SJ SM SN SX LAR
2000 x 1000mm	GA

Standard Screens | Sliding Screens | Larenco Glass Screens
Level Best Glass Screens | Silverdale Shower Screens | Opulence Glass Screens

Waste Systems

Wastes & Pumps	**113**
Compatibility guide	114
Gravity Wastes	118
Waste Adaptors	127
Dry Wastes	129
Pumped Wastes	132
Digital Waste Pumps	140
AKW DigiPump SmartCare Wireless Waste Pump Kit	141
Wireless Interface	142
Auxiliary Pump Switch	143
DigiPump Flow Sensor Kit	143
P12 Waste Pump	144
Sanipro Macerator	148

You may also need:

Shower Trays 67	Showers 267	Shower Screens 151	Tiles & Accessories 301
Wet Room Formers 29	Tanking Kits 62	Walls & Safety Flooring 299	Plumbing Fittings 545

Wastes & Pumps

AKW's extensive range of wastes complement our range of wet room formers and shower trays. The range includes gravity, wet, dry and pumped wastes to cover all installations.

Waste system compatibility:

- WR — Compatible with Wet Room Formers
- S — Compatible with Shower Trays

Wastes for Vinyl Floors

	TF75	GW50 with adaptor	GW19 with adaptor	TF75 bottom outlet	Adaptor for Ø50mm Waste	Adaptor for Ø90mm Waste	90mmØ Dry Waste with Tuff Form Vinyl Adaptor	90mmØ Wet Waste with Tuff Form Vinyl Adaptor	CTW01 Shower Trap	CUW01 Pumped Trap
ShowerDec *(Ø160mm)*	✓	✓	✓	✓	✓	✓	✓	✓	✓	✓
Tuff Form® /Tuff Form8® *(Ø160mm)*	✓	✓	✓	✓	✓	✓	✓	✓	✓	✓
Tri Form® *(Ø50/90mm)*	✗	✗	✗	✗	✗	✗	✗	✗	✗	✗
Braddan *(Ø50/90mm)*	✗	✗	✗	✗	✗	✗	✗	✗	✗	✗
Swift *(Ø90mm)*	✗	✗	✗	✗	✗	✗	✗	✗	✗	✗
Eagle TWO *(Ø90mm)*	✗	✗	✗	✗	✗	✗	✗	✗	✗	✗
Sulby	✗	✗	✗	✗	✗	✗	✗	✗	✗	✗
Sulby 2 *(Ø90mm)*	✗	✗	✗	✗	✗	✗	✗	✗	✗	✗
Low Profile *(Ø90mm)*	✗	✗	✗	✗	✗	✗	✗	✗	✗	✗
Onyx / Onyx Exclusif / Onyx Linea *(Ø90mm)*	✓	✓	✓	✓	✓	✓	✓	✓	✓	✓

Wastes for Tiled Floors

	SS-TF75	Swirl Adaptor for ø50mm wastes	GW50 with Swirl Adaptor	GW19 with Swirl Adaptor	Drilled Adaptor for ø50mm wastes	GW50 with Drilled Adaptor	GW19 with Drilled Adaptor	90mmØ Dry Waste with Tuff Form Tiled Adaptor	90mmØ Wet Waste with Tuff Form Tiled Adaptor
	LB00101	LB00171	LB00102	LB00103	25433	21318	21319	25418-UK	25498-UK
ShowerDec *(Ø160mm)*	✓	✓	✓	✓	✓	✓	✓	✓	✓
Tuff Form® /Tuff Form8® *(Ø160mm)*	✓	✓	✓	✓	✓	✓	✓	✓	✓
Tri Form® *(Ø50/90mm)*	✗	✗	✗	✗	✗	✗	✗	✗	✗
Braddan *(Ø50/90mm)*	✗	✗	✗	✗	✗	✗	✗	✗	✗
Swift *(Ø90mm)*	✗	✗	✗	✗	✗	✗	✗	✗	✗
Eagle TWO *(Ø90mm)*	✗	✗	✗	✗	✗	✗	✗	✗	✗
Sulby	✗	✗	✗	✗	✗	✗	✗	✗	✗
Sulby 2 *(Ø90mm)*	✗	✗	✗	✗	✗	✗	✗	✗	✗
Low Profile *(Ø90mm)*	✗	✗	✗	✗	✗	✗	✗	✗	✗
Onyx / Onyx Exclusif / Onyx Linea *(Ø90mm)*	✓	✓	✓	✓	✓	✓	✓	✓	✓

	Ø90mm Wastes						Ø50mm Wastes	
	GW90 + Adaptor (25409)	**Low Depth GW90** + Adaptor (25409)	**90mmØ Dry Waste** + Adaptor (25409)	**90mmØ DW90 Waste** for Onyx	**90mmØ GW90 Onyx Waste**	**90mmØ Wet Waste** + Adaptor (25409)	**GW50** + Adaptor (LB00171 or 25433 or 25107)	**GW19** + Adaptor (LB00171 or 25433 or 25107)
	25120	**25404**	**25492-UK**	**25696-UK**	**25695**	**25434**	**25126**	**25125**
ShowerDec *(Ø160mm)*	A ✓	A ✓	A ✓	✗	✗	A ✓	A ✓	A ✓
Tuff Form® /Tuff Form8® *(Ø160mm)*	A ✓	A ✓	A ✓	✗	✗	A ✓	A ✓	A ✓
Tri Form® *(Ø50/90mm)*	✗	✗	✗	✓	✓	A ✓	A ✓	A ✓
Braddan *(Ø50/90mm)*	✗	✗	✗	✗	✗	✗	A ✓	A ✓
Swift *(Ø90mm)*	✗	✗	✗	✗	✗	✗	A ✓	A ✓
Eagle TWO *(Ø90mm)*	A ✓	A ✓	✓	✗	✗	A ✓	✗	✗
Sulby	✗	✗	✗	✗	✗	✗	✗	✗
Sulby 2 *(Ø90mm)*	A ✓	A ✓	✓	✗	✗	A ✓	✗	✗
Low Profile *(Ø90mm)*	A ✓	A ✓	A ✓	✗	✗	A ✓	✗	✗
Onyx / Onyx Exclusif / Onyx Linea *(Ø90mm)*	✓	✓	✓	✓	✓	✓	✓	✓

A Denotes that waste requires an adaptor and does not come with one as standard, the relevant adaptor product code is stated at the top of the column.

WASTE SYSTEMS COMPATIBILITY GUIDE

	Pumped for Vinyl Floors		Pumped for Tiled Floors	Ø50mm Pumped		Ø90mm Pumped			Upward Discharge
	PGTF (15mm)	**SilentFlow+** (PGTF 22mm)	**SS-PGTF** (22mm)	**PW50** (15mm) + Adaptor (LB00171 or 25433 or 25107)	**PW50** (22mm) + Adaptor (LB00171 or 25433 or 25107)	**PW90** (15mm) + Adaptor (25409)	**PW90** 22mm Pumped Waste for Onyx	**PW90** (22mm) + Adaptor (25409)	**Upward Discharge** (Factory Fitted)
	25101	**25414**	**LB00104**	**25122**	**25405**	**25105**	**25695**	**25406**	**07130**
ShowerDec *(Ø160mm)*	✓	✓	✓	A ✓	A ✓	A ✓	✗	A ✓	✗
Tuff Form® /Tuff Form8® *(Ø160mm)*	✓	✓	✓	A ✓	A ✓	A ✓	✗	A ✓	✗
Tri Form® *(Ø50/90mm)*	✗	✗	✗	A ✓	A ✓	✓	✓	✓	✗
Braddan *(Ø50/90mm)*	✗	✗	✗	A ✓	A ✓	✗	✗	✗	**Factory fitted**
Swift *(Ø90mm)*	✗	✗	✗	A ✓	A ✓	✗	✗	✗	**Factory fitted**
Eagle TWO *(Ø90mm)*	✗	✗	✗	✗	✗	A ✓	✗	A ✓	✗
Sulby	✗	✗	✗	✗	✗	✗	✗	✗	✗
Sulby 2 *(Ø90mm)*	✗	✗	✗	✗	✗	A ✓	✗	A ✓	✗
Low Profile *(Ø90mm)*	✗	✗	✗	✗	✗	A ✓	✗	A ✓	✗
Onyx / Onyx Exclusif / Onyx Linea *(Ø90mm)*	✓	✓	✓	✓	✓	✓	✓	✓	✓

A Denotes that waste requires an adaptor and does not come with one as standard, the relevant adaptor product code is stated at the top of the column.

WASTES

WR S

Standard Gravity Waste with 19mm or 50mm Water Trap

AKW Standard gravity waste with 19mm or 50mm water trap for Braddan and Swift trays or the Tuff Form®/Tuff Form8® former with adaptor (see **page** 127).

Exploded View

Features & Benefits

+ One-piece design with built in filter particularly ideal for wooden floor installations
+ Gravity waste allows for easy shower tray or former installation
+ Water trap prevents bad odour backflow
+ Top access for easy cleaning and ensures easy maintenance
+ Built-in filter catches hair and debris which can be removed for cleaning
+ Can be specified with tiles and vinyl with appropriate adaptor

Specifications

Water trap depth (seal): 19mm or 50mm
Waste hole fitting diameter: 50mm
Bayonet fitting cover
Depth below tray: 93mm (19mm) and 124mm (50mm)
Overall depth: 113mm (19mm) and 144mm (50mm)
Flow rate: approx. 35 litre per minute

Product Codes

Standard Gravity Waste (19mm Water Trap)	**25125**
Standard Gravity Waste (50mm Water Trap)	**25126**

GW50 Patent: GB2418355

LIFETIME WARRANTY

WASTES

WR S

GW90 90mm Diameter with 50mm Water Trap

Can be specified with any Sulby 2, Eagle TWO or Low Profile tray. Alternatively, can be fitted to the wet floor formers with adaptor (see **page** 127).

Exploded View

GW90 Onyx Waste

Features & Benefits

+ One-piece design with built in filter particularly ideal for wooden floor installations
+ Water trap prevents bad odour backflow
+ Top access for easy cleaning and ensures easy maintenance
+ Built-in filter catches hair and debris which can be removed for cleaning
+ Can be specified with vinyl flooring
+ Gravity waste particularly ideal for any Sulby2, Eagle TWO or Low Profile shower trays on wooden floor Installations

Specifications

Water trap depth (seal): 50mm
Waste hole fitting diameter: 90mm
Bayonet fitting cover
Depth below tray: 90mm
Overall depth: 110mm
Flow rate: approx. 31 litre per minute

Product Codes

GW90 Gravity Waste (50mm Water Trap)	**25120**
GW90 Onyx Waste for Onyx tray and Linea Tray	**25694**

GW90 Patent: GB2418355

WASTES

WR S

Low Depth GW90 90mm Diameter with 50mm Water Trap

The low depth gravity waste has been designed for ease of installation and flexibility of fitting. The 90mm diameter waste with a 50mm water trap is suitable for Sulby 2, Eagle TWO or Low Profile® trays where height restrictions are an issue. Alternatively it can be used with wet floor formers with GW90 Gravity waste adaptor.

GW90 Gravity waste adaptor

LIFETIME WARRANTY

Features & Benefits

- Unique swivel outlet for quick and easy installation
- Water trap prevents bad odour backflow
- Top access for easy cleaning and ensures easy maintenance
- Built-in filter catches hair and debris which can be removed for cleaning
- Can be specified with vinyl flooring
- Can be specified with wet floor formers when fitted with the adaptor 25409
- Low depth gravity waste particularly ideal for Sulby 2, Low Profile and Eagle TWO trays on wooden floor installations

Specifications

Water Trap depth (seal): 50mm
Depth below tray: 60mm
Bayonet fitting cover
Overall depth: 82mm
Waste fitting hole diameter: 90mm
Flow rate: approx. 9 litres per minute

Product Codes

Low Depth GW90 Gravity Waste (50mm Water Trap)	**25404**
Low Depth GW90 Waste Tuff Form Adaptor (waste not included)	**25409**
Low Depth GW90 Waste Tuff Form Adaptor	**25435**

WR S

GW90-2 Low Depth Wet Waste with Vinyl Floor Adaptor

Features & Benefits

- Compact and shallow 53mm depth ideal for solid floor or shallow joist installations
- Suitable for use with push fit & solvent weld pipe (with included adaptor)
- Water trap prevents bad odour backflow
- Top access for easy cleaning and ensures easy maintenance
- Built-in filter catches hair and debris which can be removed for cleaning
- Can be specified with vinyl flooring

Waste pipe connector kit included in kit

Specifications

Water Trap depth (seal): 50mm
Depth below tray: 72mm
Push fit top
Overall depth: 89mm
Waste fitting hole diameter: 90mm
Flow rate: 27 l/min + 15mm head + 1m pipe

Product Code

GW90-2 Low Depth Wet Waste with Vinyl Floor Adaptor	**25499-UK**

WR S

TF75 Bottom Outlet Waste with 75mm Water Seal Trap Shower Gulley

Suitable to fit with Tuff Form® /Tuff Form8® wet floor formers with vertical outlet to suit 110mm standard pipe.

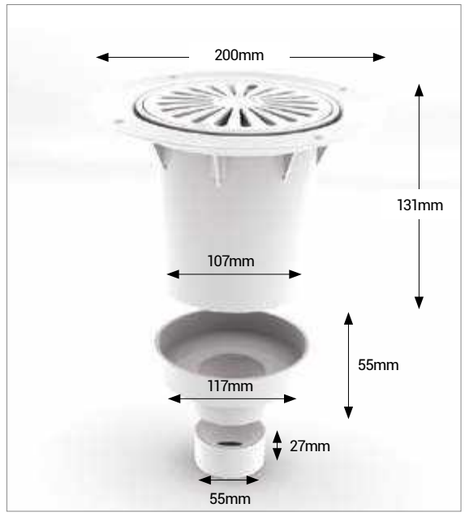

TF75 Patent: GB2402946

Features & Benefits

- Bayonet fitting or option to screw down waste top ideal for properties with concrete flooring and new build properties
- Water trap prevents bad odour backflow
- Top access for easy cleaning and ensures easy maintenance
- Built-in filter catches hair and debris which can be removed for cleaning
- One part waste for easy installation
- Can be specified with vinyl flooring
- Suitable to fit with all wet floor formers with vertical outlet to suit 110mm standard pipe

Specifications

Water Trap depth (seal): 75mm
Depth below tray: 157mm
Bayonet fitting or option to screw down waste top
Overall depth: 213mm
Waste diameter: 200mm
Flow rate: approx. 32 litres per minute
Solvent socket adaptor for vertical 4", 2", 1½" outlets

Product Code

TF75 Bottom Outlet Waste with 75mm Water Seal Trap Shower Gulley	**25408**
TSG2SS-SL-NSC 75mm Water Seal Trapped Gully - Round Chrome Top	**08GT11**
TSG2SS-SL-NSC 75mm Water Seal Trapped Gully - Square Chrome Top	**08GT14**

WR S

TF75 Gravity Waste for Tuff Form® and Screeded Floors

Designed for Tuff Form® /Tuff Form8® wet floor formers and screeded floor installations in a breachable floor.

Exploded View

TF75 Patent: GB2402946

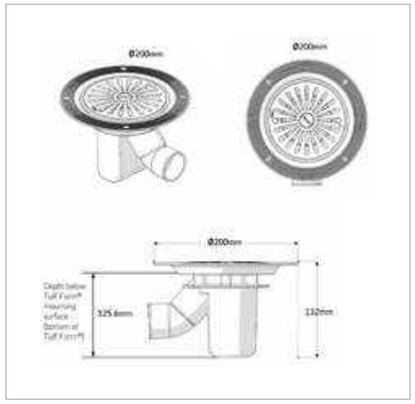

Features & Benefits

- Adjustable elbow for waste pipe exit
- Accommodates vertical or horizontal outlets as elbow can be easily adjusted to suit existing pipework
- Water trap prevents bad odour backflow
- Top access for easy cleaning and ensures easy maintenance
- Built-in filter catches hair and debris which can be removed for cleaning
- Can be specified with vinyl flooring
- Designed for all wet floor formers and screeded floor installations in a breachable floor
- Alternative waste cover available in Mid Grey to provide users with a greater contrast in the bathroom, especially those with sight loss and dementia.

Specifications

Water Trap depth (seal): 75mm
Depth below tray: 125mm
Bayonet fitting or option to screw down waste top
Overall depth: 132mm
Waste diameter: 200mm
Flow rate: approx. 32 litres per minute

Product Codes

TF75 Gravity Waste for Tuff Form® and Screeded Floors	**25106**
TF75 Tuff Form Waste Cover Grey	**18-003-029**
CTW01 Gravity Shower Trap	**08CTW01**
McAlpine Standard TSG52 Two Piece 50mm Water Seal Gully	**08GT52NSC**

WR S

GW90-2 Low Depth Wet Waste with TF Tiled Floor Adaptor

Features & Benefits

+ Compact and shallow 53mm depth ideal for solid floor or shallow joist installations
+ Suitable for push fit & solvent weld pipe (with included adaptor)
+ Water trap prevents bad odour backflow
+ Top access for easy cleaning and ensures easy maintenance
+ Built-in filter catches hair and debris which can be removed for cleaning
+ Can be specified with tiled flooring

Waste pipe connector kit included in kit

Specifications

Water Trap depth (seal): 50mm
Depth below tray: 68mm
Push fit top
Overall depth: 53mm
Waste diameter: 90mm
Flow rate: 27 litres per minute + 15mm head + 1m pipe

Product Code

GW90-2 Low Depth Wet Waste with TF Tiled Floor Adaptor	**25498-UK**
TSG52T150SSCON - Two Piece 50mm Water Seal Trapped Gully - Square Chrome Top	**08GT52-S**

WR S

SS-TF75 Stainless Steel Gravity Waste for Tuff Form® and Screeded Floors

Designed for Tuff Form® /Tuff Form8® wet floor formers and screeded floor installations in a breachable floor.

Patent Pending

Features & Benefits

+ Adjustable elbow for waste pipe exit
+ Accommodates vertical or horizontal outlets as elbow can be easily adjusted to suit existing pipework
+ Water trap prevents bad odour backflow
+ Top access for easy cleaning and ensures easy maintenance
+ Built-in filter catches hair and debris which can be removed for cleaning
+ Can be specified with tiled flooring
+ Designed for Tuff Form® /Tuff Form8® wet floor formers and screeded floor installations in a breachable floor

Specifications

Water Trap depth (seal): 75mm
Depth below tray: 125mm
Bayonet fitting or option to screw down waste top
Overall depth: 132mm
Waste diameter: 200mm
Flow rate: approx. 32 litres per minute

Product Code

SS-TF75 Stainless Steel Gravity Waste for Tuff Form® and Screeded Floors	**LB00101**

WR S

CTW01 Gravity Shower Trap

Features & Benefits

- 2 part, 50mm water seal trapped waste for use with a wetroom floor former and flexible sheet flooring
- Bolts together for easy installation
- Push on cover plate
- Removable inner cup for cleaning
- Manufactured in ABS to the highest quality and will withstand wheelchair loadings.
- Ideal for showers in domestic wet rooms, disabled and student accommodation, bathroom pods, retirement and care homes, hotels, hospitals and sport and leisure

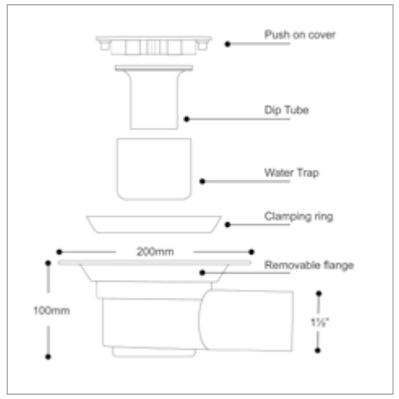

Specifications

Water Trap depth (seal): 50mm
Depth below tray: 68mm
Push fit top
Overall depth: 53mm
Waste diameter: 90mm
Flow rate: 26 litres per minute

Product Code

CTW01 Shower Trap	**08CTW01**

WR

TFWA Tuff Form® Waste Adaptor

This adaptor ring allows a typical top clearing ø50mm trapped waste to be fitted into a Tuff Form® former.

Features & Benefits

- Designed to trap vinyl flooring in place maintaining a watertight installation
- Can be specified with Tuff Form (with vinyl flooring)
- Opens from above for easy installation
- Offers an additional option to suit installation requirements

Specifications

19mm (GW19) or 50mm (GW50) water trap options available
Depth below tray: 97mm (19mm) and 128mm (50mm)
Overall depth: 128mm (19mm) and 159mm (50mm)

Product Codes

TFWA Tuff Form® Waste Adaptor only	**25107**
TFWA Tuff Form® Waste Adaptor with 19mm Standard Waste	**25129**
TFWA Tuff Form® Waste Adaptor with 50mm Standard Waste	**25124**

Patent: GB2402946
EU reg number: EU 000189105-0001

Please note: Supplied with bayonet fitted cover. Has the option of additional securing with screws as shown in photo.

TF75/TFWA Bath to Tray Adaptor

The TF75/TFWA Bath to Tray Adaptor has been designed to offer customers a Bathroom for Life and can be used in conjunction with the TF75 Tuff Form Gravity Waste (see page 116) and TFWA with 19mm/50mm waste (see page 110)

Product Code

TF75 Tuff Form® Bath-to-Tray Adaptor	**25410**

WR

SS-TFWA Stainless Steel Tuff Form® Waste Adaptor

This adaptor ring allows a typical top clearing ø50mm trapped waste to be fitted into Tuff Form® wet floor formers.

Features & Benefits

+ Opens from above for easy installation
+ Offers an additional option to suit installation requirements

Specifications

19mm (GW19) or 50mm (GW50) water trap options available

Depth below former: 97mm (19mm) and 128mm (50mm)

Overall depth: 128mm (19mm) and 159mm (50mm)

Stainless steel plate dimensions: 120 x 120mm

Stainless steel plate height is adjustable to max of 25mm

Product Codes

SS-TFWA Tuff Form® Waste Adaptor (Wave Grate) only	**LB00171**
SS-TFWA Tuff Form® Waste Adaptor (Wave Grate) with 19mm Standard Waste	**LB00103**
SS-TFWA Tuff Form® Waste Adaptor (Wave Grate) with 50mm Standard Waste	**LB00102**
SS-SFWA Waste Adaptor Dot Grate (w/o trapped waste)	**25433**
SS-SFWA Waste with GW50 & Dot Grate	**21318**
SS-SFWA Waste with GW19 & Dot Grate	**21319**

For the **GW90 Gravity waste** see **page** 119

EU reg number: EU 000189105-0001

GW90 Gravity Waste Tuff Form® Adaptor

The GW90 Gravity Wastes (25404 and 25120) are suitable for use with all Tuff Form® formers if fitted in conjunction with this Tuff Form® waste adaptor for vinyl flooring.

Product Code

GW90 Gravity Waste Tuff Form® Adaptor	**25409**

WR S

Low Depth Dry Waste with Domed Cover

Low depth dry shower wastes suitable for Sulby 2, Low profile and Mullen®. Also suitable for wet floor formers with adaptor (see **page** 127).

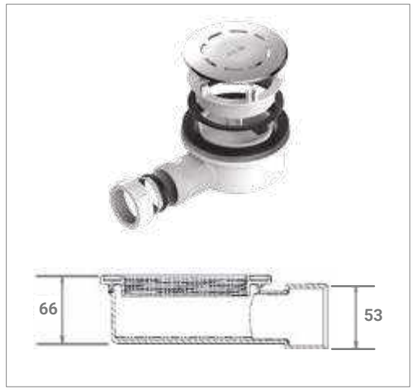

Features & Benefits

+ Suitable for trays with Ø 90mm waste hole (Sulby 2, Low Profile and Mullen shower trays)
+ Very compact, useful for solid floors or shallow joists
+ Suitable for use with push fit & solvent weld pipe (with included adaptor)
+ Non return valve ensures the trap always retains water aiding in the prevention of bad odour backflow and prevents the trap from drying out with sporadic use
+ Watertight fitting created with good seals and valve location
+ Top access for easy cleaning and ensures easy maintenance
+ Can be specified with vinyl flooring

Specifications

Depth below tray: 53mm

Push fit top

Overall depth: 60mm

Waste diameter: 90mm

Flow rate: 27 l/min with 15mm head and 1m of pipe

Pipe Adaptor Kit included

Spare parts available: Plastic Chrome Dome, Metal Chrome Dome, Pipe Adaptor Kit and Dry Waste Non-Return Valve

Product Codes

DW90 Low Depth Dry Shower Waste	**25492-UK**
Spare Plastic Chrome Dome	**16-006-008**
Spare Metal Chrome Dome	**16-006-038**
Spare Pipe Adaptor Kit	**16-006-058**
Spare Dry Waste Non Return Valve	**16-006-037**
DW90 Waste for Onyx Tray	**25696-UK**

Spare Parts:

Spare Plastic Chrome Dome

Spare Metal Chrome Dome

Spare Pipe Adaptor Kit

Spare Dry Waste Non Return Valve

WR

Low Depth Dry Waste with TF Vinyl Floor Adaptor

Tuff Form® Waste for Vinyl Flooring with DW90 Low Depth Dry Shower Waste and Vinyl Floor Adaptor.

Features & Benefits

- Suitable for wet floor formers
- Very compact, useful for solid floors or shallow joists
- Non return valve ensures the trap always retains water aiding in the prevention of bad odour backflow and prevents the trap from drying out with sporadic use
- Suitable for use with push fit & solvent weld pipe (with included adaptor)
- Watertight fitting created with good seals and valve location
- Top access for easy cleaning and ensures easy maintenance
- Can be specified with vinyl flooring

Spare Parts:

Spare Pipe Adaptor Kit

Spare Dry Waste Non Return Valve

Specifications

Depth below tray: 53mm
Push fit top
Overall depth: 66mm
Waste diameter: 90mm
British standards: BS EN 274 Part 2:2002
Flow rate: 27 l/min with 15mm head and 1m of pipe
Pipe Adaptor Kit included
Spare parts available: Pipe Adaptor Kit and Dry Waste Non-Return Valve

Product Codes

Low Depth Dry Waste with Tuff Form® Vinyl Floor Adaptor	**25419-UK**
Spare Pipe Adaptor Kit	**16-006-058**
Spare Dry Waste Non Return Valve	**16-006-037**
VSG1 Valve Gravity Shower Gully 1 1/2 in Horizontal Outlet	**08GV01NSC**

WASTES

S

GW90 90mm Diameter Waste Metal Topped

GW90 Metal Topped 90mm diameter waste provides a high rate 27 l/min when installed with a 15mm head and 1m pipe installation.

Features & Benefits

- Very compact, useful for solid floors or shallow joists
- Non return valve ensures the trap always retains water aiding in the prevention of bad odour backflow and prevents the trap from drying out with sporadic use
- Suitable for use with push fit & solvent weld pipe (with included adaptor)
- Watertight fitting created with good seals and valve location
- Top access for easy cleaning and ensures easy maintenance
- Can be specified with vinyl flooring

Specifications

Water trap depth: n/a
Depth below tray: 53mm
Push fit top
Overall depth: 60mm
Waste diameter: 90mm
Pipe Adaptor Kit included
Flow rate: approx. 31 litres per minute

Product Codes

GW90 Metal Topped 90mm Diameter Waste	**25434**
GW90-2 gravity waste with domed cover	**25497-UK**

WASTES

WR

PGTF Pumped Gulley Waste for Tuff Form® with 15mm Outlet only

Can be specified with formers

Patent: GB2373515

Features & Benefits

+ Low-level waste option for unbreachable floors with all Tuff Form/Tuff Form8® formers
+ Top access for easy cleaning and ensures easy maintenance
+ Offers an additional option for specification
+ Can be specified with vinyl flooring

Specifications

Bayonet or screw down option
Depth below tray: 35mm
Overall depth: 43mm
15mm John Guest Speedfit outlet

Product Code

PGTF Pumped Gulley Waste 15mm Outlet	**25101**

WR

SilentFlow+® Waste Pump (PGTF) with 22mm Outlet

The SilentFlow+® waste pump is a completely new design which is virtually silent in operation to reduce the noise associated with shower pumps and wastes.

Features & Benefits

+ For a virtually silent-operating pumped waste installation for a pleasant showering experience
+ Noise level testing shows the SilentFlow+® is comparable with the nearest competitors 'quiet' pumped waste at up to 11 lpm and outperforms above 11 lpm
+ Encourages optimum water flow direction while reducing turbulence by balancing flow and dampening surges to reduce the gulping effect
+ Can be connected to all pumps in the current range
+ Pumped waste solution for low-depth floors
+ Provides solutions for unbreachable floor showering adaptations
+ Top access for easy cleaning and ensures easy maintenance
+ Can be specified with vinyl flooring
+ Can be specified with formers

Specifications

Depth below tray: 45mm
Bayonet fit top
Integrated 22mm John Guest fitting

Product Codes

SilentFlow+® Waste Pump (PGTF) (22mm John Guest Speedfit Outlet)	**25414**
15mm Female JG to 22mm Reducer	**25195**
CUW01 Pumped Trap	**08CUW01**

Please note: Supplied with bayonet fitted cover. Has the option of additional securing with screws as shown in photo.

WR

CUW01 Pumped Trap

Tuff Form® Waste for Tiled Flooring with DW90 Low Depth Dry Shower Waste and Tiled Floor Adaptor.

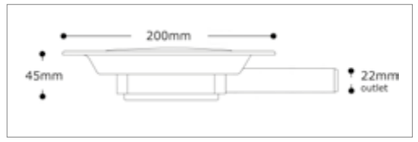

WASTES

Features & Benefits

- To be used in conjunction with a shower waste pump & wetroom floor former
- For use with flexible sheet flooring
- Push on cover plate
- Clamping ring screws in position
- Top access, easy to clean
- 22mm outlet.
- Increased outlet length for easier installation
- Ideal for showers in domestic wet rooms, disabled and student accommodation, bathroom pods, retirement and care homes, hotels, hospitals and sport and leisure

Specifications

Depth below tray: 45mm
22mm outlet
Overall depth: 22mm
Waste diameter: 200mm
Compatible with ShowerDec®, Tuff Form8, or Tuff Form, wetroom floor formers & flexible sheet flooring

Product Codes

CUW01 Floor Former Pumped Shower Gully	**08CUW01**

WR

DW90 Waste with Tuff Form® Tiled Floor Adaptor

Tuff Form® Waste for Tiled Flooring with DW90 Low Depth Dry Shower Waste and Tiled Floor Adaptor.

WASTES

Features & Benefits

- Suitable for trays with Ø 90mm waste hole
- Very compact, useful for solid floors or shallow joists
- Non return valve ensures the trap always retains water aiding in the prevention of bad odour backflow and prevents the trap from drying out with sporadic use
- Suitable for use with push fit & solvent weld pipe (with included adaptor)
- Watertight fitting created with good seals and valve location
- Top access for easy cleaning and ensures easy maintenance
- Can be specified with tiled flooring

Specifications

Depth below tray: 66mm
Push fit top
Overall depth: 53mm
Waste diameter: 90mm
British standards: BS EN 274 Part 2:2002
Flow rate: 27 l/min with 15mm head and 1m of pipe
Pipe Adaptor Kit included
Spare parts available: Pipe Adaptor Kit and Dry Waste Non-Return Valve

Product Codes

DW90 Low Depth Dry Shower Waste with Tuff Form® Tiled Floor Adaptor	**25418-UK**
Spare Pipe Adaptor Kit	**16-006-058**
Spare Dry Waste Non Return Valve	**16-006-037**

Spare Parts:

Spare Pipe Adaptor Kit

Spare Dry Non Return Waste Valve

WR

SS-PGTF Stainless Steel Pumped Gulley Waste for Tuff Form® with 22mm Outlet only

Can be specified with formers

Features & Benefits

+ Low-level waste option for unbreachable floors with all wet floor formers
+ Designed for easy fitting by accommodating variants in ceramic tile finishes
+ Top access for easy cleaning and ensures easy maintenance
+ Can be specified with tiled flooring

Specifications

Depth below tray: 44mm
Overall depth: 52mm
Push fit top
22mm John Guest Speedfit outlet
Stainless steel plate dimensions: 120 x 120mm
Stainless steel plate height adjustable 6mm - 25mm max

Product Codes

SS-PGTF Stainless Steel Pumped Gulley Waste	**LB00104**
15mm female JG to 22mm male plastic reducer (Waste to Digipump) x1	**25414**
22mm - 15mm F Push Fit Reducers x 10	**30059**
SilentFlow+® Waste Pump (PGTF) (22mm John Guest Speedfit Outlet)	**25414**

S

Standard PW50 50mm Diameter Pumped Waste with 15mm or 22mm Outlet

Issued as standard with both automatic and automatic mixer valve pump kits.

Features & Benefits

+ Offers an additional option to suit installation requirements
+ Easy installation and watertight fitting
+ Top access for easy cleaning and ensures easy maintenance
+ Built-in filter catches hair and debris which can be removed for cleaning
+ 15 or 22mm John Guest Speedfit outlets available

Exploded View

Specifications

Depth below tray: 38mm (15mm) and 44mm (22mm)
Overall depth: 50mm (15mm) and 56mm (22mm)
Bayonet fit top
15 or 22mm John Guest Speedfit outlet
Waste diameter: 50mm

Product Codes

Standard PW50 50mm Pumped Waste (15mm John Guest Speedfit Outlet)	**25122**
Standard PW50 50mm Pumped Waste (22mm John Guest Speedfit Outlet)	**25405**
15mm Female JG to 22mm Reducer	**25195**

PW50 Patent: GB2375479

S

PW90 90mm Diameter Pumped Waste with 15mm or 22mm Outlet

Specially designed shallow pump gulley (for Sulby 2 or Mullen®) with two baffle features that help to reduce the noise during showering cycles.

Exploded View

PW50 Patent: GB2375479

Features & Benefits

+ Offers an additional option to suit installation requirements
+ Easy installation and watertight fitting
+ Top access for easy cleaning and ensures easy maintenance
+ Built-in filter catches hair and debris which can be removed for cleaning
+ 15 or 22mm John Guest Speedfit outlets available

Specifications

Depth below tray: 36mm (15mm) and 44mm (22mm)
Overall depth: 58mm (15mm) and 66mm (22mm)
Bayonet fit top
15 or 22mm John Guest Speedfit outlet
Waste diameter: 90mm

Product Codes

PW90 90mm Pumped Waste (15mm John Guest Speedfit Outlet)	**25105**
PW90 90mm Pumped Waste (22mm John Guest Speedfit Outlet)	**25406**
PW90 22mm pumped waste for Onyx	**25695**
15mm Female JG to 22mm Reducer	**25195**
22mm - 15mm F Push Fit Reducers x 10	**30059**

WR

Screedmaster® Pumped Gulley

Allows you to fit a pumped waste into a floor screed without having to excavate the entire floor.

Patent: GB2374876

For pipe and push fit fittings see **page 545**

Features & Benefits

+ Fitted with a pumped waste is ideal for graded floor installations with vinyl flooring
+ Can accommodate wheelchairs or chair legs
+ Top access for easy cleaning and ensures easy maintenance
+ Offers an additional option to suit installation requirements
+ Can be specified with vinyl flooring

Specifications

Bayonet or screw down option
Overall depth: 32mm or 37mm
15 or 22mm John Guest Speedfit® outlet

Product Codes

15mm Screedmaster® Pumped Gulley	**25100**
22mm Screedmaster® Pumped Gulley	**25407**
15mm Female JG to 22mm Reducer	**25195**

WR S

AKW DigiPumps

Designed and manufactured by AKW, our comprehensive range of digital shower waste pumps suit installations where gravity drainage is not achievable.

Features & Benefits

- Models available to suit both electric and mixer showers
- Can be connected wirelessly or hard wired to showers flow sensor
- M11 option (for electric showers only), M17 option (for both electric and mixer showers),
- M20 option (ultimate performance for both electric and mixer showers)
- Non-handed (to fit left or right inlet)
- Pump head uses 4 valves for better debris cleaning
- Pump head can be rotated to allow flow in either direction which is ideal for bathrooms with limited space
- Flow sensor available to activate DigiPumps used with dual-fed showers
- Easy to set up and configure ensuring full drainage of shower tray as pump automatically adjusts to the variation of water supply
- Maintenance free 7 year warranty

Our DigiPump Installation Guide can be found on orders.akw-ltd.co.uk

AKW DigiPumps can connect directly to other manufacturers showers

7 YEAR WARRANTY — UK CA CE — IP45

Extended options available

BS EN 61558-1, BS EN 61558-2-6
BS EN 60335-1, BS EN 60335-2-41
BS EN 60529
E MC Directive 89/336/EEC
Low Voltage Directive 73/23/EEC

Specifications

Max flow rate: 11 litres/min (M11), 17 litres/ min (M17) and 20 litres/min (M20) in 'real life' scenario testing	
M11: 15mm inlet and 22mm outlet connectors	
M17 and M20: 22mm inlet and outlet connectors	
Internal TGA fuse	
IP45 rated	
Maximum Outlet Head	1.0m (39in)
Maximum Inlet Head	0.5m (19in)
Maximum Combined Head and Lift	1.5m (59in)
Supply	230V AC 50Hz 73W
Duty Cycle	30 mins max on 50% duty

WASTES

Product Codes

	M11 DigiPump Product Code:	M17 DigiPump Product Code:	M20 DigiPump Product Code:
Component Part	25470	25450	25480
Without Waste	25471	25451	25481
Standard PW50 50mm Diameter Pumped Waste	25472	25452	25482
PW90 90mm Diameter Pumped Waste	25473	25453	25483
PGTF Tuff Form® Pumped Waste	25474	–	–
Screedmaster Waste	25475	–	–
SilentFlow+® Waste	25476	25458	25486

AKW DigiPump SmartCare Plus® Wireless Waste Pump Kit

The AKW SmartCare Plus® shower works seamlessly with AKW DigiPump and Wireless Pump Interface Box to match the rate of flow.

Features & Benefits

- IP45 rating so it is safe to be fitted within the showering area
- Replaces flow meter on pump connection
- Supplied with matched shower PCB and pump interface box
- Can be fitted inside the pump case or on the wall
- Requires no separate power supply (taken from pump signal wires)
- Compatible with all AKW digital pumps: M11, M17, M20 and P12
- No wires and no mess means super-quick and easy installation in situations where gravity waste isn't suitable

AKW SmartCare Plus®	Smooth Hose		
Waste Option:	8.5kW	9.5kW	10.5kW
M11 DigiPump and SilentFlow+R Waste	29028WH	29027WH	29026WH
M11 DigiPump and Standard PW50 Waste	29034WH	29033WH	29032WH
M11 DigiPump and PW90 90mm Waste	29037WH	29036WH	29035WH
M11 DigiPump and Screedmaster Waste	29040WH	29039WH	29038WH
M11 DigiPump Only*	29043WH	29042WH	29041WH

*For Upward Discharge Waste.

Wireless Pump Module

The Wireless Pump Module connects AKW SmartCare Plus® and SmartCare® Lever electric showers to the AKW M11, M17 and M20 DigiPumps® by receiving information from the shower and transmitting it to the pump.

Features & Benefits

+ Supplied with matched PCB to connect wireless module to the shower unit
+ Pump not included in kits below

Product Codes

AKW Electric Showers Wireless Pump Module	**30315**

Auxiliary Pump Switch

Designed to activate the pump and drain water without turning on the shower, helping to facilitate cleaning and excess water drainage.

Features & Benefits

+ Compatible with all DigiPumps® from 2021
+ Press retractive switch that contains an internal spring, so that it automatically resets back to OFF upon release
+ Wall-mounted switch that works in conjunction with the pump, without turning the shower on

Product Code

DigiPump® Auxiliary Pump Switch Only	**25488**

DigiPump Flow Sensor Kit

DigiPump Flow Sensor Kit for use with mixer or electric showers

Features & Benefits

+ External wireless communication device for mixer or electric Showers
+ Quick and easy to install
+ Compatible with all AKW DigiPumps®: M11, M17, M20 - Pumps are available with different capacities to support the volume of water flow; all are compatible with the wireless module
+ Please note: For an electric shower (not using internal flow sensor or wireless option), you will require an external flow sensor. If using a mixer shower, you will require 2 flow sensors.

Product codes

Flow Sensor Kit	**25194**
M11 Digital Pump with Flow Sensor Kit	**25471**
M17 Digital Pump with Flow Sensor Kit	**25451**
M20 Digital Pump with Flow Sensor Kit	**25481**

P12 Waste Pump

The only quiet, unblockable & maintenance free shower waste pump.

Features & Benefits

- Near silent operation for a relaxed showering experience
- Reliable peristaltic pump design
- Variable speed controller is designed to be highly efficient and match the flow volumes of electric & mixer showers
- Compatible with AKW wastes (with a 22mm outlet), trays and showers for effortless operation with compatible AKW products for a complete showering solution
- Offers a wireless connection to the flow sensor within AKW SmartCare Plus® and Smart Care® Lever electric showers
- Standard kits include 1 x flow switch for electric shower installations, an optional flow switch is available if required
- Optional auxiliary switch, designed to activate the pump to drain water away without the need to turn on the shower
- Flow switch and optional Auxiliary switch are easy to install
- Error Codes displayed on control allowing for easy diagnosis in the unlikely event of a fault
- Low running costs due to the efficient 24v DC motor
- Suitable for Electric Showers or Mixer Showers (which require an additional flow switch and flow limiter).
- Link directly to AKW SmartCare Plus and SmartCare Lever electric showers eliminating the flow switch
- With 3 metre length of 22mm flexible pipe for convenient installations
- Non-handed for quick & easy installation
- Maintenance free with a 7-year warranty

7 YEAR WARRANTY

UK CA | CE

Specification	
Maximum flow rate	Up to 12 lpm
Variable speed	Yes
Maximum outlet head	2mm
Compatible wastes	Yes, 22mm outlet
Individually factory water tested	Yes
Power rating	24v DC
Inlet & outlet connection	22mm
ELECTRICAL CONTROL BOX	
Supply rating	230V AC 50Hz 60W
IP rating	IPX4
Zones for Installation	1 or 2

Product Codes	
P12 Waste Pump Link	**05PP01-L**
P12 Digital Pump Controller	**05PP10D**
Optional Extras	
Auxiliary Pump Switch	**25488**
Flow Switch	**05PP90**
P12 Pump & Waste Kits	
P12 Pump with Push Fit Fittings AKW	**05PP01-A**
P12 Pump Link AKW	**05PP01-LA**
P12 Pump Kit A with PW50 Waste AKW	**05PP01A-A**
P12 Pump Kit Link Option A with PW50 Waste AKW	**05PP01A-LA**
P12 Pump Kit A with CUW01 Waste AKW	**05PP01B-A**
P12 Pump Kit Link Option A with CUW01 Waste AKW	**05PP01B-LA**
P12 Pump Kit A with PW90 Waste AKW	**05PP01-A**
P12 Pump Kit Link Option A with PW90 Waste AKW	**05PP01D-LA**
P12 Pump Kit A with Silent Flow+ Waste AKW	**05PP01F-A**
P12 Pump Kit Link Option A with Silent Flow+ Waste AKW	**05PP01F-LA**

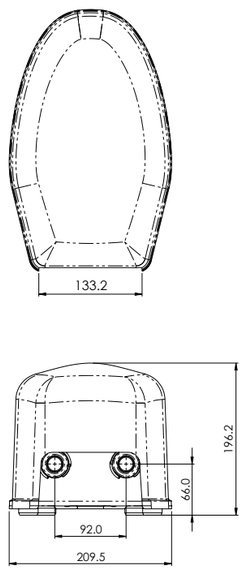

P12 Waste Pump

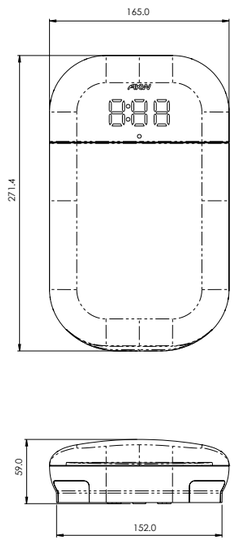

P12 Digital Pump Controller

P12 Waste Pump Kits

P12 Pump Only

Pump Only	**05PP01A**
Link Pump Only	**05PP01-LA**

For top access shower trays: pump only

P12 Pump Kit D with PW90 waste for 90mm compatible shower trays

Standard Kit D	**05PP01D-A**
Link Kit D	**05PP01D-L**

For shower trays with ø90mm waste

P12 Pump Kit A with PW50 waste for 50mm compatible shower trays

Standard Kit A	**05PP01A-A**
Link Kit A	**05PP01A-LA**

For shower trays with ø50mm waste

Additional Flowswitch Kit for use with mixer showers

Flowswitch	**05PP11**

P12 Pump Kit B with CUW01 for wetroom floor formers

Standard Kit B	**05PP01B**
Link Kit B	**05PP01B-L**

For wetroom floor formers.

P12 Pump Kit F with SilentFlow+ for wetroom floor formers

Standard Kit F	**05PP01F**
Link Kit F	**05PP01F-L**

For wetroom floor formers.

AKW SmartCare Plus®	Smooth Hose		
Waste Option:	**8.5kW**	**9.5kW**	**10.5kW**
P12 Waste Pump and SilentFlow+R Waste	**29028WHP12**	**29027WHP12**	**29026WHP12**
P12 Waste Pump and Standard PW50 Waste	**29034WHP12**	**29033WHP12**	**29032WHP12**
P12 Waste Pump and PW90 90mm Waste	**29037WHP12**	**29036WHP12**	**29035WHP12**
P12 Waste Pump and Screedmaster Waste	**29040WHP12**	**29039WHP12**	**29038WHP12**
P12 Waste Pump Only*	**29043WHP12**	**29042WHP12**	**29041WHP12**

Sanipro Macerator

A Sanipro Macerator can easily deal with a WC, basin, bidet and a power shower. Ideal for replacement installations as no change in pipework is needed.

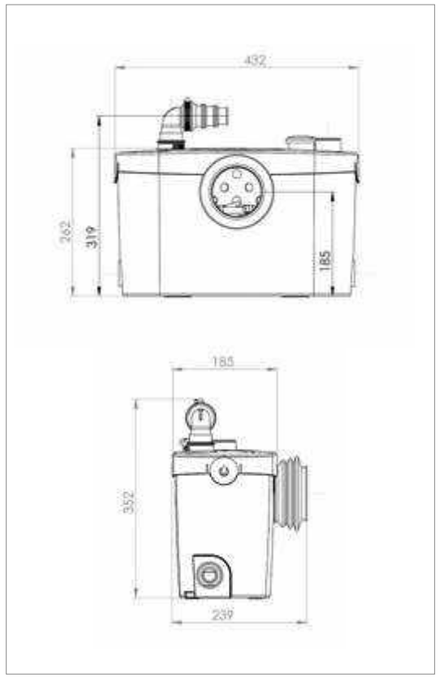

Features & Benefits

- Deals with waste from a WC, basin, bidet, shower or power shower, so ideal for an en-suite in your home
- New easy access to the tank due to the removable lid offering easy servicing and maintenance
- New improved design of casing, compact, neat and unobtrusive
- Pumps up to 5m vertically or 100m horizontal
- Allows you to fit a WC almost anywhere

Specification

Number of available inlets:	4
Recommended discharge pipe dia:	22/28/32 mm
Motor power:	400W
Supply voltage:	220-240V/50Hz
Electrical class:	1
IP rating:	IP24 IP44
Sound level:	46 dB(A)
Maximum horizontal discharge:	100 m
Maximum vertical discharge:	5 m
Maximum flow rate:	90 l/m
Rated current:	1.9 A

Product Codes

Sanipro Macerator	**04MSP**

Shower Screens & Enclosures

Shower Screen type
(with tray compatibility reference code):

- A — Standard Shower Screens
- GA — Glass Shower Screens
- SE — Sliding Shower Screens
- A — Silverdale® Shower Screens
- WF5 — Contour Showers Ltd. Shower Screens

L/R in the product code denotes whether the screen is Left or Right handed.

Shower Screens 151

Larenco Screens 153
Opulence Screens 171
Level Best Glass Screens 179
Standard Screens 183
Screen Configurations 184
Made-to-Measure Screens 188
Sliding Screens 227
Portable Screens 236
Shower Curtain Rails 237
Drop Rods 239
Compensator 240
Shower Curtain Clip 241
Shower Curtains 242
Handles 243
Door Latches 243

Shower Cubicles 245

Onyx Care Pod 246
Onyx Shower Cubicles 256
Onyx Shower Cubicle Accessories 260
Standalone Cubicles 261
Showerloo 265

You may also need:

Tiles & Accessories 301
Timber 327
Safety Flooring 321
Showers 267
Waste Systems 111
Plumbing Fittings 545

Larenco

Beautifully reflecting AKW's expertise, the Larenco modular glass screen range fits perfectly in any home, representing the ultimate in inclusive living.

+ Lightweight, 6mm toughened glass for ease of operation
+ Stay Clear coating technology to reduce cleaning
+ Suits trays and wet floors
+ No threshold strip to give barrier free access
+ Modular design provides a solution for most adaptations, care or access need in any size or shape of bathroom
+ Lifetime warranty

Larenco Saloon Door

Features & Benefits

+ Full-height bi-parting shower screens
+ Stay Clear coating for ease of cleaning
+ Lightweight, 6mm toughened safety glass
+ Suitable for shower trays or wet room floors
+ Suitable for alcove installations only

Dimensions, Size Options & Product Codes:

Shower Tray Size Options:	Height	Door Width	Fixed Panel Width	Overall Width	Code:
800	1900	800	–	785 – 812	**26654**
900	1900	900	–	885 – 912	**26655**
1000	1900	1000	–	985 – 1012	**26656**
1200	1900	800	400	1157 – 1202	**26975**
1300	1900	900	400	1257 – 1302	**26976**
1400	1900	1000	400	1357 – 1402	**26977**

Please note: Larenco Saloon Doors can only be installed in an alcove installation or for an enclosure scenario to an end panel attached to an inline panel.

All of the ranges can be increased by 20mm by using a wide wall compensator.
Product codes: Full height: **26708**. Half height: **26709**.

Larenco Sliding Door

Features & Benefits

+ Suitable for shower trays and wet floors*
+ Optional side panels to make corner or 3-sided enclosures
+ Lightweight, 6mm toughened safety glass

Specifications

Non-handed

Sliding door

Full-height

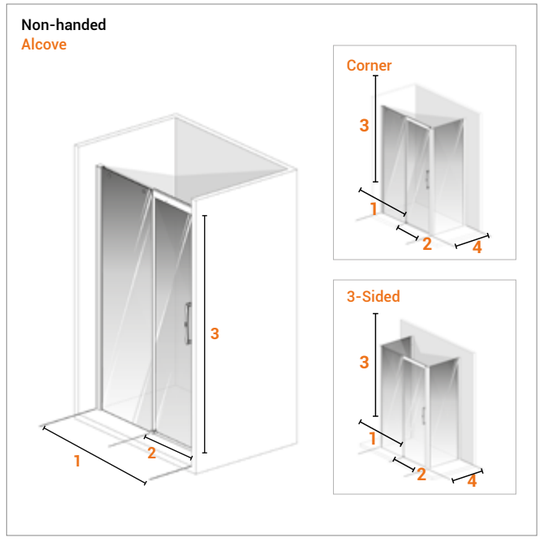

Dimensions, Size Options & Product Codes:

Shower Tray Size Options:	1 Alcove	1 Corner	1 3-sided	2	3	4	Code:
1200	1164–1196	1167 – 1208	1170 – 1217	470	2000	677 - 695	**27626**
1400	1364 – 1396	1362 – 1408	1365 – 1421	570	2000	–	**27627**
1500	1464 – 1496	1467 – 1508	1470 – 1517	620	2000	877 – 895	**27628**
1700	1646 – 1696	1662 – 1708	1665 – 1721	720	2000	–	**27629**
700	–	–	–	–	2000	677 – 695	**27630**
800	–	–	–	–	2000	777 – 795	**27631**
900	–	–	–	–	2000	877 – 895	**27632**

All of the ranges can be increased by 20mm by using a wide wall compensator.
Product codes: Full height: **27676**.

If your screen has a wide wall compensator, a narrow close-to, or an extra narrow close-to, it is not compatible with vinyl floors.

Larenco Alcove Full-Height Door

Features & Benefits

+ Suitable for shower trays and wet floors
+ Plain, bi-fold and duo door options available
+ Lightweight, 6mm toughened safety glass

Specifications

Alcove installation

Non-handed

One door

Full-height

Non-handed
Plain Door

Non-handed
Bi-Fold Door

Non-handed
Duo Door

UK CA | CE

Dimensions, Size Options & Product Codes:

Shower Tray Size Options:	1	2	3	4	5	Plain Door Code:	Bi-Fold Door Code:	Duo Door Code:
760	650	350	310	1900	742 – 760	–	**27537**	–
800	690	370	330	1900	782 – 800	**26800**	**26802**	**26805**
900	790	420	380	1900	882 – 900	**26801**	**26803**	**26806**
1000	890	470	430	1900	982 – 1000	**27605**	**26804**	**27606**

All of the ranges can be increased by 20mm by using a wide wall compensator.
Product codes: Full height: **26708**. Half height: **26709**.

Larenco Alcove Half-Height Door

Features & Benefits

+ Suitable for shower trays and wet floors
+ Plain and bi-fold door options available
+ Lightweight, 6mm toughened safety glass
+ No curtain or rail supplied (see **page** 237)

Specifications

Alcove installation

Non-handed

One door with inline panel

Half-height

Non-handed
Plain Door

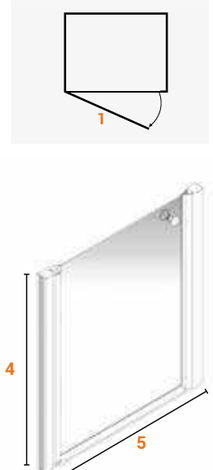

Non-handed
Bi-Fold Door

UK CA | CE

Dimensions, Size Options & Product Codes:

Shower Tray Size Options:	1	2	3	4	5	Plain Door Code:	Bi-Fold Door Code:
800	690	370	330	900	782 – 800	**26807**	**26809**
900	790	420	380	900	882 – 900	**26808**	**26810**
1000	890	470	430	900	982 – 1000	**27607**	**26811**

SCREENS

Larenco Alcove Full-Height Door with Inline Panel

Features & Benefits

+ Suitable for shower trays and wet floors
+ Plain, bi-fold and duo door options available
+ Lightweight, 6mm toughened safety glass

Specifications

Alcove installation

Non-handed

One door with inline panel

Full-height

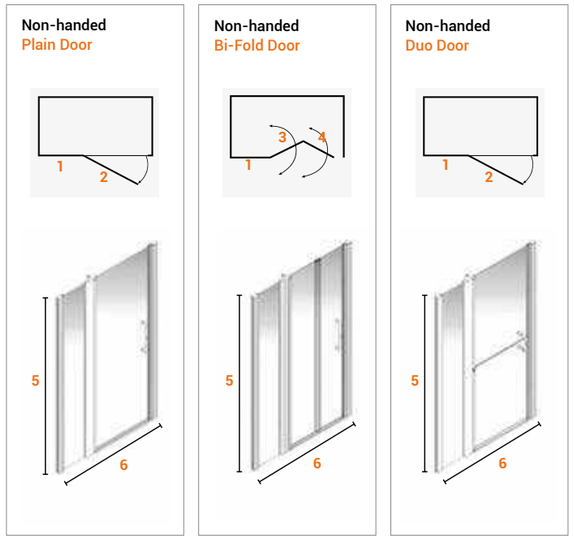

UK CA | CE

Dimensions, Size Options & Product Codes:

Shower Tray Size Options:	1	2	3	4	5	6	Plain Door Code:	Bi-Fold Door Code:	Duo Door Code:
1200	417 – 436	690	370	330	1900	1154 – 1190	**26852**	**26853**	**26854**
1300	517 – 536	790	420	380	1900	1254 – 1290	**26857**	**26858**	**26859**
1400	617 – 636	890	470	430	1900	1354 – 1390	**27578**	**27610**	**27577**

All of the ranges can be increased by 20mm by using a wide wall compensator.
Product codes: Full height: **26708**. Half height: **26709**.

Larenco Alcove Half-Height Door with Inline Panel

Features & Benefits

+ One door with one inline panel
+ Half height
+ Plain and bi-fold door options available
+ Non-handed
+ Suitable for shower trays and wet floors
+ Alcove installation
+ Lightweight, 6mm toughened safety glass
+ Includes floor to ceiling pole
+ No curtain or rail supplied (see **page 237**)

Specifications

Alcove installation

Non-handed

One door with inline panel

Half-height

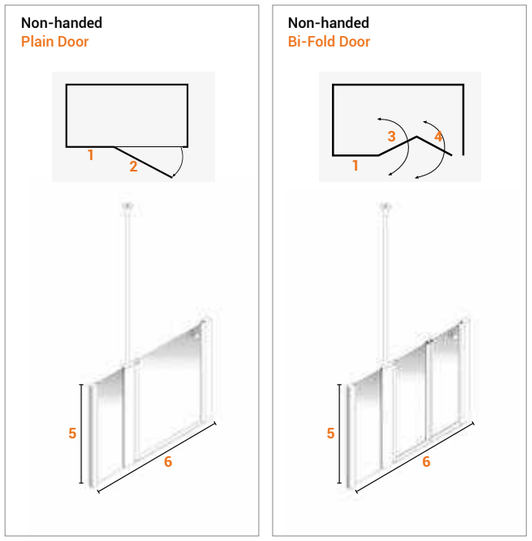

UK CA | CE

Dimensions, Size Options & Product Codes:

Shower Tray Size Options:	1	2	3	4	5	6	Plain Door Code:	Bi-Fold Door Code:
1200	417 – 436	690	370	330	900	1154 – 1190	**26855**	**26856**
1300	417 – 436	790	420	380	900	1254 – 1290	**26860**	**26861**
1400	417 – 436	890	470	430	900	1354 – 1390	**27580**	**27581**

All of the ranges can be increased by 20mm by using a wide wall compensator.
Product codes: Full height: **26708**. Half height: **26709**.

Larenco Alcove Full-Height Door with Two Inline Panels

Features & Benefits

+ Suitable for shower trays and wet floors
+ Plain, bi-fold and duo door options available
+ Lightweight, 6mm toughened safety glass

Specifications

Alcove installation

Non-handed

One door with inline panel

Full-height

Non-handed
Plain Door

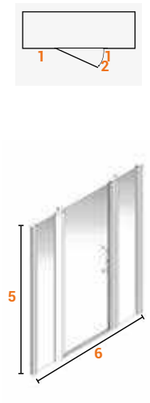

Non-handed
Bi-Fold Door

Non-handed
Duo Door

UK CA | CE

Dimensions, Size Options & Product Codes:

Shower Tray Size Options:	1	2	3	4	5	6	Plain Door Code:	Bi-Fold Door Code:	Duo Door Code:
1600	417 – 436	690	370	330	1900	1547 – 1597	–	–	**27608**
1700	417 – 436	790	420	380	1900	1647 – 1697	**27591**	**27592**	**27590**
1800	417 – 436	890	470	430	1900	1747 – 1797	**27596**	**27597**	**27595**

All of the ranges can be increased by 20mm by using a wide wall compensator.
Product codes: Full height: **26708**. Half height: **26709**.

Larenco Alcove Half Height Door with Two Inline Panels

Features & Benefits

+ Suitable for shower trays and wet floors
+ Plain and bi-fold door options available
+ Lightweight, 6mm toughened safety glass
+ No curtain or rail supplied (see **page 237**)

Specifications

Alcove installation

Non-handed

One door with inline panel

Half-height

Non-handed
Plain Door

Non-handed
Bi-Fold Door

UK CA | CE

Dimensions, Size Options & Product Codes:

Shower Tray Size Options:	1	2	3	4	5	6	Plain Door Code:	Bi-Fold Door Code:
1700	417 – 436	790	420	380	900	1647 – 1697	**27593**	**27594**
1800	417 – 436	890	420	430	900	1747 – 1797	**27598**	**27599**

All of the ranges can be increased by 20mm by using a wide wall compensator.
Product codes: Full height: **26708**. Half height: **26709**.

Larenco Corner with Two Full-Height Doors

Features & Benefits

+ Suitable for shower trays and wet floors
+ Plain, bi-fold and duo door options available
+ Lightweight, 6mm toughened safety glass

Specifications

Corner installation
Non-handed
Two Doors
Half-height

Non-handed
Plain Door

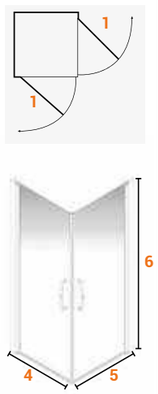

Non-handed
Bi-Fold Door

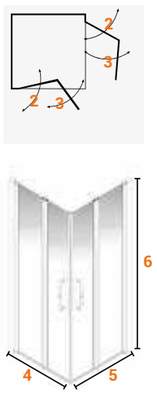

Non-handed
Duo Door

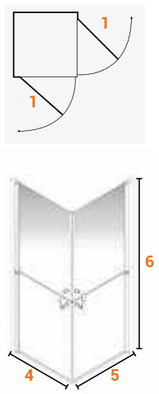

UK CA | CE

Dimensions, Size Options & Product Codes:

Shower Tray Size Options:	1	2	3	4	5	6	Plain Door Code:	Bi-Fold Door Code:	Duo Door Code:
760 x 760	–	350	310	734 – 747	734 – 747	1900	–	**26840**	–
800 x 800	690	370	330	774 – 787	774 – 787	1900	**26838**	**26841**	**26844**
800 x 1000	695/890	–	–	774 – 787	974 – 987	1900	**27559**	–	–
900 x 900	790	420	380	874 – 887	874 – 887	1900	**26839**	**26842**	**26845**
1000 x 800	890/690	–	–	974 – 987	774 – 787	1900	**27558**	–	–
1000 x 1000	890	470	430	974 – 987	974 – 987	1900	**27566**	**27614**	**27565**

All of the ranges can be increased by 20mm by using a wide wall compensator.
Product codes: Full height: **26708**. Half height: **26709**.

Larenco Corner with Two Half-Height Doors

Features & Benefits

+ Suitable for shower trays and wet floors
+ Plain and bi-fold door options available
+ Lightweight, 6mm toughened safety glass
+ No curtain or rail supplied (see **page** 237)

Specifications

Corner installation
Non-handed
Two Doors
Full-height

Non-handed
Plain Door

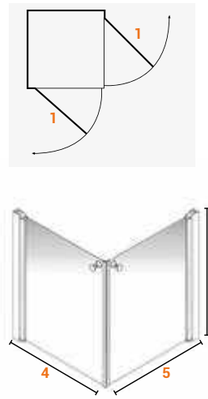

Non-handed
Bi-Fold Door

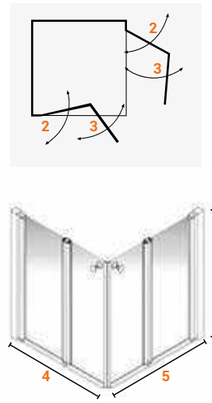

UK CA | CE

Dimensions, Size Options & Product Codes:

Shower Tray Size Options:	1	2	3	4	5	6	Plain Door Code:	Bi-Fold Door Code:
800 x 800	690	370	330	774 – 787	774 – 787	900	**26846**	**26848**
900 x 900	790	420	380	874 –887	874 – 887	900	**26847**	**26849**
1000 x 1000	890	470	430	974 – 987	974 – 987	900	**27567**	**27615**
1200 x 1200	–	570	530	1174 – 1187	1174 – 1187	900	–	**27571**

Larenco Corner with Full-Height Door and Side Panel

Features & Benefits

+ Suitable for shower trays and wet floors
+ Plain, bi-fold and duo door options available
+ Lightweight, 6mm toughened safety glass

Specifications

Corner installation

Non-handed

One door with a side panel

Half-height

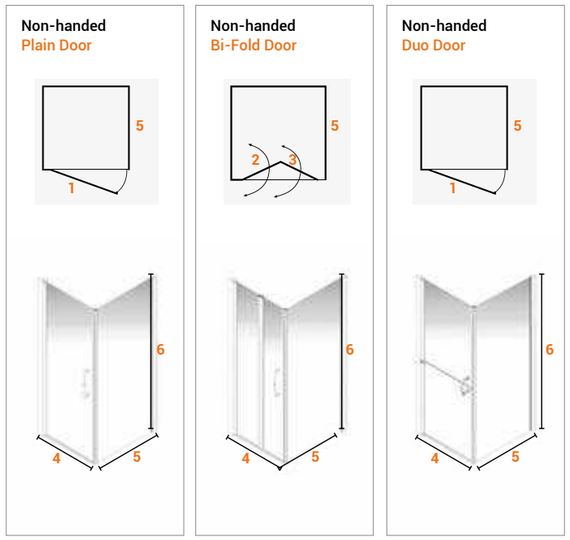

Dimensions, Size Options & Product Codes:

Shower Tray Size Options:	1	2	3	4	5	6	Plain Door Code:	Bi-Fold Door Code:	Duo Door Code:
800 x 800	690	370	330	783 – 796	776 – 795	1900	**26812**	**26816**	**26822**
800 x 900	690	370	330	783 – 796	876 – 895	1900	**26813**	**26818**	**26823**
900 x 800	790	420	380	883 – 896	776 – 795	1900	**26814**	**26819**	**26824**
900 x 900	790	420	380	883 – 996	876 – 895	1900	**26815**	**26817**	**26825**
1000 x 700	890	470	430	983 – 996	676 – 695	1900	**27554**	**27555**	**27553**
1000 x 800	890	470	430	983 – 996	776- 795	1900	**–**	**26820**	**–**
1000 x 900	890	470	430	983 – 996	876 – 895	1900	**–**	**26821**	**–**
1000 x 1000	890	470	430	983 – 996	976 – 995	1900	**27561**	**27562**	**27560**

Larenco Corner with Half-Height Door & Side Panel

Features & Benefits

+ Suitable for shower trays and wet floors
+ Plain and bi-fold door options available
+ Lightweight, 6mm toughened safety glass
+ No curtain or rail supplied (see **page** 237)

Specifications

Corner installation

Non-handed

One door with a side panel

Full-height

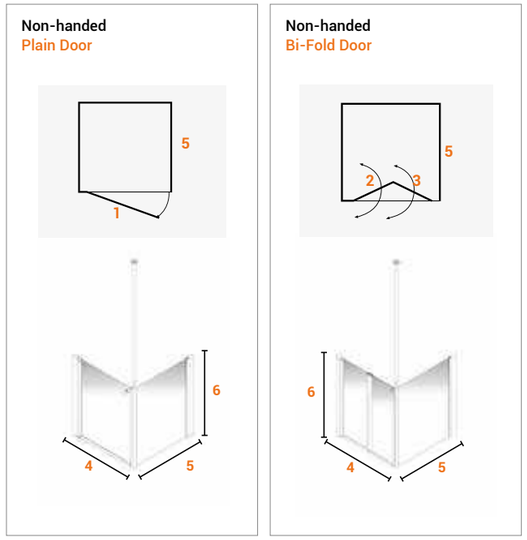

Dimensions, Size Options & Product Codes:

Shower Tray Size Options:	1	2	3	4	5	6	Plain Door Code:	Bi-Fold Door Code:
800 x 800	690	370	330	783 – 796	776 – 795	900	**26826**	**26830**
800 x 900	690	370	330	783 – 796	876 – 895	900	**26828**	**26832**
900 x 800	790	420	380	883 – 896	776 – 795	900	**26827**	**26833**
900 x 900	790	420	380	883 – 996	876 – 895	900	**26829**	**26831**
1000 x 700	890	470	430	983 – 996	676 – 695	900	**27556**	**27557**
1000 x 800	890	470	430	983 – 996	776- 795	900	**–**	**26834**
1000 x 900	890	470	430	983 – 996	876 – 895	900	**–**	**26835**
1000 x 1000	890	470	430	983 – 996	976 – 995	900	**27563**	**27564**

Larenco Corner Full-Height Door, with Inline Panel and Side Panel

Features & Benefits

+ Suitable for shower trays and wet floors
+ Plain, bi-fold and duo door options available
+ Lightweight, 6mm toughened safety glass

Specifications

Corner installation

Non-handed

One door with an inline panel and a side panel

Full-height

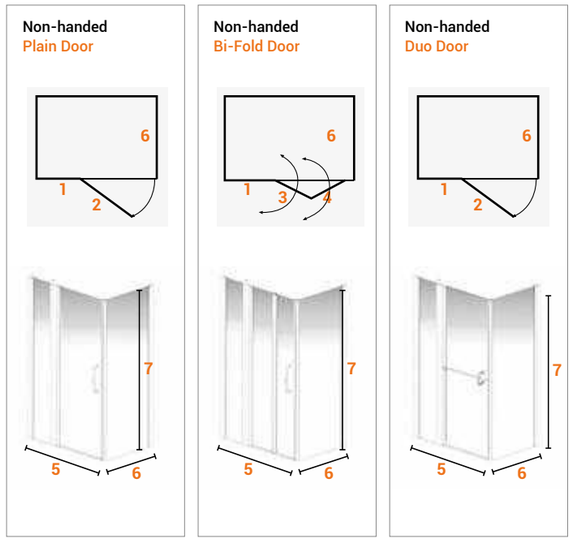

Dimensions, Size Options & Product Codes:

Shower Tray Size Options:	1	2	3	4	5	6	7	Plain Door Code:	Bi-Fold Door Code:	Duo Door Code:
1200 x 700	417 – 436	690	370	330	1154 – 1186	676 – 695	1900	**26862**	**26865**	**26868**
1200 x 800	417 – 436	690	370	330	1155 – 1186	776 – 795	1900	**26863**	**26866**	**26869**
1200 x 900	417 – 436	690	370	330	1156 – 1186	876 – 895	1900	**26864**	**26867**	**26870**
1300 x 700	417 – 436	790	420	380	1254 – 1286	676 – 695	1900	**26877**	**26880**	**26883**
1300 x 800	417 – 436	790	420	380	1255 – 1286	776 – 795	1900	**26878**	**26881**	**26884**
1300 x 900	417 – 436	790	420	380	1256 – 1286	876 – 895	1900	**26879**	**26882**	**26885**
1400 x 900	417 – 436	890	470	430	1356 – 1386	876 – 895	1900	**27583**	**27584**	**27582**

All of the ranges can be increased by 20mm by using a wide wall compensator.
Product codes: Full height: **26708**. Half height: **26709**.

Larenco Corner Half-Height Door, with Inline Panel and Side Panel

Features & Benefits

+ Suitable for shower trays and wet floors
+ Plain and bi-fold door options available
+ Lightweight, 6mm toughened safety glass
+ No curtain or rail supplied (see **page** 237)

Specifications

Corner installation

Non-handed

One door with an inline panel and a side panel

Half-height

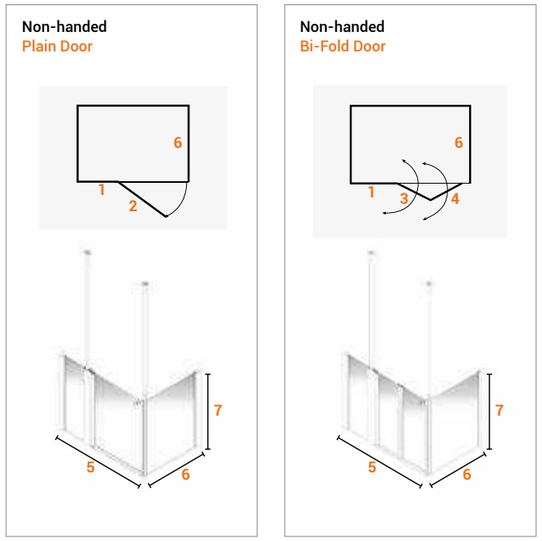

Dimensions, Size Options & Product Codes:

Shower Tray Size Options:	1	2	3	4	5	6	7	Plain Door Code:	Bi-Fold Door Code:
1200 x 700	417 – 436	690	370	330	1154 – 1186	676 – 695	900	**26871**	**26874**
1200 x 800	417 – 436	690	370	330	1155 – 1186	776 – 795	900	**26872**	**26875**
1200 x 900	417 – 436	690	370	330	1156 – 1186	876 – 895	900	**26873**	**26876**
1300 x 700	417 – 436	790	420	380	1254 – 1286	676 – 695	900	**26886**	**26889**
1300 x 800	417 – 436	790	420	380	1255 – 1286	776 – 795	900	**26887**	**26890**
1300 x 900	417 – 436	790	420	380	1256 – 1286	876 – 895	900	**26888**	**26891**
1400 x 900	417 – 436	890	470	430	1356 – 1386	876 – 895	900	**27585**	**27586**

All of the ranges can be increased by 20mm by using a wide wall compensator.
Product codes: Full height: **26708**. Half height: **26709**.

Larenco Corner Full-Height Door, Two Inline Panels and Side Panel

Features & Benefits

+ Suitable for shower trays and wet floors
+ Plain, bi-fold and duo door options available
+ Lightweight, 6mm toughened safety glass

Specifications

Corner installation

Non-handed

One door with two inline panels and a side panel

Full-height

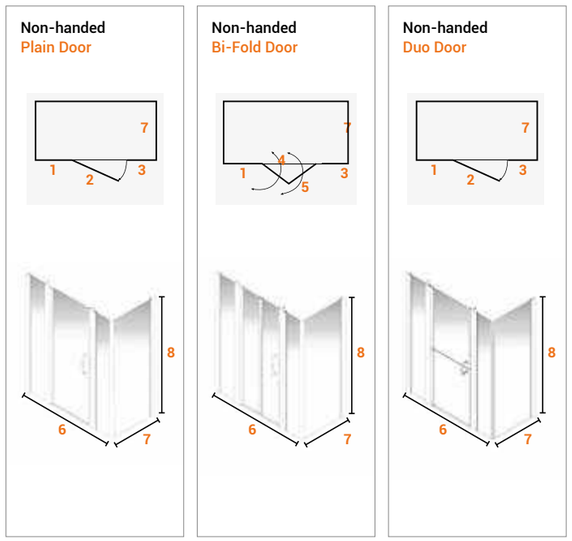

UK CA | CE

Dimensions, Size Options & Product Codes:

Shower Tray Size Options:	1	2	3	4	5	6	7	8	Plain Door Code:	Bi-Fold Door Code:	Duo Door Code:
1600 x 700	417 – 436	690	401	370	330	1555 – 1590	682 – 700	1900	**26892**	**26901**	**26910**
1600 x 800	417 – 436	690	401	370	330	1555 – 1590	782 – 800	1900	**26893**	**26902**	**26911**
1600 x 900	417 – 436	690	401	370	330	1555 – 1590	882 – 900	1900	**26894**	**26903**	**26912**
1700 x 700	417 – 436	790	401	420	380	1655 – 1690	682 – 700	1900	**26895**	**26904**	**26913**
1700 x 800	417 – 436	790	401	420	380	1655 – 1690	782 – 800	1900	**26896**	**26905**	**26914**
1700 x 900	417 – 436	790	401	420	380	1655 – 1690	882 – 900	1900	**26897**	**26906**	**26915**
1800 x 700	417 – 436	890	401	470	430	1755 – 1790	682 – 700	1900	**26898**	**26907**	**26916**
1800 x 800	417 – 436	890	401	470	430	1755 – 1790	782 – 800	1900	**26899**	**26908**	**26917**
1800 x 900	417 – 436	890	401	470	430	1755 – 1790	882 – 900	1900	**26900**	**26909**	**26918**

All of the ranges can be increased by 20mm by using a wide wall compensator.
Product codes: Full height: **26708**. Half height: **26709**.

Larenco Corner Half-Height Door, Two Inline Panels and Side Panel

Features & Benefits

+ Suitable for shower trays and wet floors
+ Plain, bi-fold and duo door options available
+ Lightweight, 6mm toughened safety glass
+ No curtain or rail supplied (see **page 237**)

Specifications

Corner installation

Non-handed

One door with two inline panels and a side panel

Half-height

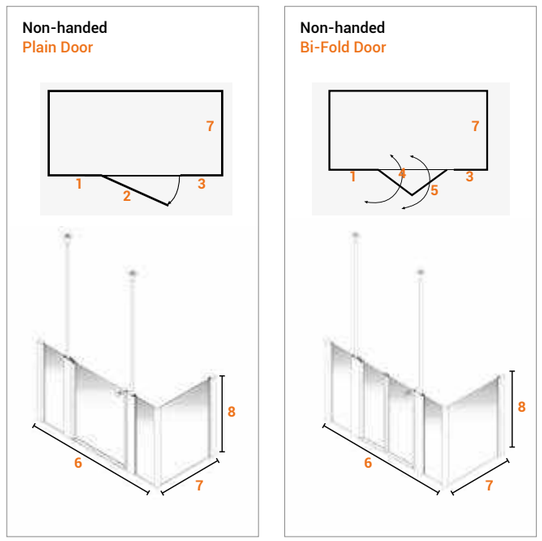

UK CA | CE

Dimensions, Size Options & Product Codes:

Shower Tray Size Options:	1	2	3	4	5	6	7	8	Plain Door Code:	Bi-Fold Door Code:
1600 x 700	417 – 436	690	401	370	330	1555 – 1590	682 – 700	900	**26919**	**26928**
1600 x 800	417 – 436	690	401	370	330	1555 – 1590	782 – 800	900	**26920**	**26929**
1600 x 900	417 – 436	690	401	370	330	1555 – 1590	882 – 900	900	**26921**	**26930**
1700 x 700	417 – 436	790	401	420	380	1655 – 1690	682 – 700	900	**26922**	**26931**
1700 x 800	417 – 436	790	401	420	380	1655 – 1690	782 – 800	900	**26923**	**26932**
1700 x 900	417 – 436	790	401	420	380	1655 – 1690	882 – 900	900	**26924**	**26933**
1800 x 700	417 – 436	890	401	470	430	1755 – 1790	682 – 700	900	**26925**	**26934**
1800 x 800	417 – 436	890	401	470	430	1755 – 1790	782 – 800	900	**26926**	**26935**
1800 x 900	417 – 436	890	401	470	430	1755 – 1790	882 – 900	900	**26927**	**26936**

Opulence

The Opulence range of half height shower doors, full height shower enclosures and walk in wet room shower screens take into consideration function, size, accessibility and style. There is an Opulence modern glass shower enclosure to suit all practical requirements for everyday use, and to create luxurious shower retreats.

Each exceptional Opulence shower enclosure is built to last, with polished chrome wall profiles, chrome plated, solid brass 180° rise & fall door hinges and fittings.

+ Half height shower doors are ideal for when the shower user may need some help showering or if they do not want to feel enclosed in a full height shower enclosure
+ Top Bi-fold Stable Door shower enclosure support multigenerational living, catering for different generations with different needs who share the same home & bathroom facilities
+ Shower screens which can be utilised with a grab pole for assistance or a flipper panel to retain splashed water
+ Toughened glass for safety
+ Suitable for all trays depending on tray size
+ Corner or alcove options
+ Lifetime warranty

GD1 Twin Bi-folding Doors

Product Codes

	Tray or Tiled Flooring	Vinyl Flooring
900 x 900 NH	GD1-90X90-01T	GD1-90x90-01V
1000 x 1000 NH	GD1-10X10-01T	GD1-10X10-01V

GD2 Twin Bi-folding Doors

Product Codes

	Tray or Tiled Flooring	Vinyl Flooring
900 x 900 NH	GD2-90X90-01T	GD2-90x90-01V
1000 x 800mm LH	GD2-10X80-01LHT	GD2-10X80-01LHV
1000 x 800mm RH	GD2-10X80-01RHT	GD2-10X80-01RHV
1000 x 1000mm NH	GD2-10X10-01T	GD2-10X10-01V
1200 x 800mm LH	GD2-12X80-02LHT	GD2-12X80-02LHV
1200 x 800mm RH	GD2-12X80-02RHT	GD2-12X80-02RHV
1300 x 800mm LH	GD2-13X80-01LHT	GD2-13X80-01LHV
1300 x 800mm RH	GD2-13X80-01RHT	GD2-13X80-01RHV
1400 x 900mm LH	GD2-14X90-02LHT	GD2-14X90-02LHV
1400 x 900mm RH	GD2-14X90-02RHT	GD2-14X90-02RHV
1500 x 1000mm LH	GD2-15X10-01LHT	GD2-15X10-01LHV
1500 x 1000mm RH	GD2-15X10-01RHT	GD2-15X10-01RHT

GD3 Bi-folding & Bi-parting Doors

Product Codes

	Tray or Tiled Flooring	Vinyl Flooring
900 x 900 NH	GD2-90X90-01T	GD2-90x90-01V
1000 x 800mm LH	GD2-10X80-01LHT	GD2-10X80-01LHV
1000 x 800mm RH	GD2-10X80-01RHT	GD2-10X80-01RHV
1000 x 1000mm NH	GD2-10X10-01T	GD2-10X10-01V
1200 x 800mm LH	GD2-12X80-02LHT	GD2-12X80-02LHV
1200 x 800mm RH	GD2-12X80-02RHT	GD2-12X80-02RHV
1300 x 800mm LH	GD2-13X80-01LHT	GD2-13X80-01LHV
1300 x 800mm RH	GD2-13X80-01RHT	GD2-13X80-01RHV
1400 x 900mm LH	GD2-14X90-02LHT	GD2-14X90-02LHV
1400 x 900mm RH	GD2-14X90-02RHT	GD2-14X90-02RHV

Left handed illustrated

GD4 Bi-folding Door & Return Panel

Product Codes

	Tray or Tiled Flooring	Vinyl Flooring
1200 x 700mm LH	GD4-12X70-02LHT	GD4-12X70-02LHV
1200 x 700mm RH	GD4-12X70-02RHT	GD4-12X70-02RHV
1200 x 800mm LH	GD4-12X80-02LHT	GD4-12X80-02LHV
1200 x 800mm RH	GD4-12X80-02RHT	GD4-12X80-02RHV
1300 x 800mm LH	GD4-13X80-01LHT	GD4-13X80-01LHV
1300 x 800mm RH	GD4-13X80-01RHT	GD4-13X80-01RHV
1400 x 700mm LH	GD4-14X70-01LHT	GD4-14X70-01LHV
1400 x 700mm RH	GD4-14X70-01RHT	GD4-14X70-01RHV
1400 x 900mm LH	GD4-14X90-01LHT	GD4-14X90-01LHV
1400 x 900mm RH	GD4-14X90-01RHT	GD4-14X90-01RHV

GD5 Alcove Bi-parting Doors

Product Codes

	Tray or Tiled Flooring	Vinyl Flooring
1300mm	GD5-13-07T	GD5-13-07V
1500mm	GD5-15-01T	GD5-15-01V
1700mm	GD5-17-01T	GD5-17-01V

GD6 Alcove Bi-folding Door & Fixed Panel

Product Codes

	Tray or Tiled Flooring	Vinyl Flooring
1300mm LH	GD6-13-07LHT	GD6-13-07LHV
1300mm RH	GD6-13-07RHT	GD6-13-07RHV
1500mm LH	GD6-15-02LHT	GD6-15-02LHV
1500mm RH	GD6-15-02RHT	GD6-15-02RHV
1700mm LH	GD6-17-05LHT	GD6-17-05LHV
1700mm RH	GD6-17-05RHT	GD6-17-05RHV

GD7 Alcove Bi-parting Doors

Product Codes

	Tray or Tiled Flooring	Vinyl Flooring
1600mm NH	GD7-16-01T	GD7-16-01V
1700mm NH	GD7-17-02T	GD7-17-02V
1800mm NH	GD7-18-02T	GD7-18-02V

GD8 Half Height Shower Screen

Product Codes

	Tray or Tiled Flooring	Vinyl Flooring
300mm Wide NH	GD8-30-01T	GD8-30-01V
700mm Wide NH	GD8-70-01T	GD8-70-01V
800mm Wide NH	GD8-80-01T	GD8-80-01V
900mm Wide NT	GD8-90-01T	GD8-90-01V

Latch Half Height

Product Code

Latch Half Height	**09HHLAT**

GD50 Top Bi-fold Corner Stable Door & Fixed Panel

Product Codes

	Tray or Tiled Flooring	Vinyl Flooring
1000 x 1000mm LH	GD50-10X10-01LHT	GD50-10X10-01LHV
1000 x 1000mm RH	GD50-10X10-01RHT	GD50-10X10-01RHV
1100 x 800mm LH	GD50-11X80-01LHT	GD50-11X80-01LHV
1100 x 800mm RH	GD50-11X80-01RHT	GD50-11X80-01RHV
1200 x 700mm LH	GD50-12X70-01LHT	GD50-12X70-01LHV
1200 x 700mm RH	GD50-12X70-01RHT	GD50-12X70-01RHV
1200 x 800mmLH	GD50-12X80-01LHT	GD50-12X80-01LHV
1200 x 800mm RH	GD50-12X80-01RHT	GD50-12X80-01RHV
1200 x 900mm LH	GD50-12X90-01LHT	GD50-12X90-01LHV
1200 x 900mm RH	GD50-12X90-01RHT	GD50-12X90-01RHV
1300 x 800mm LH	GD50-13x80-01LHT	GD50-13x80-01LHV
1300 x 800mm RH	GD50-13x80-01RHT	GD50-13x80-01RHV
1400 x 800mm LH	GD50-14x80-01LHT	GD50-14x80-01LHV
1400 x 800mm RH	GD50-14x80-01RHT	GD50-14x80-01RHV
1400 x 900mm LH	GD50-14X90-01LHT	GD50-14X90-01LHV
1400 x 900mm RH	GD50-14X90-01RHT	GD50-14X90-01RHV
1500 x 900mm LH	GD50-15X90-01LHT	GD50-15X90-01LHV
1500 x 900mm RH	GD50-15X90-01RHT	GD50-15X90-01RHV

GD51 Twin Top Bi-fold Corner Stable Door Enclosure

Product Codes

	Tray or Tiled Flooring	Vinyl Flooring
1000 x 1000 NH	GD51-10X10-01T	GD4-12X70-02LHV
1200 x 1000 LH	GD4-12X70-02RHT	GD4-12X70-02RHV
1200 x 1000 RH	GD4-12X80-02LHT	GD4-12X80-02LHV
1200 x 1200 NH	GD4-12X80-02RHT	GD4-12X80-02RHV
1500 x 1000 LH	GD4-13X80-01LHT	GD4-13X80-01LHV
1500 x 1000 RH	GD4-13X80-01LHT	GD4-13X80-01LHV

GD52 Alcove Top Bi-fold Stable Door & Fixed Panel

Product Codes

	Tray or Tiled Flooring	Vinyl Flooring
1500mm LH	GD52-15-01LHT	GD52-15-01LHV
1500mm RH	GD52-15-01RHT	GD52-15-01RHV
1700mm LH	GD52-17-01LHT	GD52-17-01LHV
1700mm RH	GD52-17-01RHT	GD52-17-01RHV
1800mm LH	GD52-18-01LHT	GD52-18-01LHV
1800mm RH	GD52-18-01RHT	GD52-18-01RHV

GD53 Full Height Glass Screen

Product Codes

	Tray or Tiled Flooring	Vinyl Flooring
400mm Wide	GD53-40T	GD53-40V
700mm Wide	GD53-70T	GD53-70V
800mm Wide	GD53-80T	GD53-80V
900mm Wide	GD53-90T	GD53-90V
1000mm Wide	GD53-10T	GD53-10V

Compatible with 300mm Flipper Panel or Floor-to-Ceiling Grab Pole.

300mm Flipper Panel

Features & Benefits

- Designed to act as a shower deflector panel to minimise water spray outside the shower area
- Toughened safety glass: 6mm
- Assembly overall width: 310mm wide (Glass width with hinged profile: 260mm)
- Overall assembly height: 1900mm (Glass height: 1875mm)
- Clear bottom protective seal
- Finish: Satin chrome polished
- Hinged profile pivots through 250°
- Easy clean glass helps keep the glass like new and reduces staining inbetween cleaning
- Universal design for left or right hand installation
- Lifetime warranty

Plan view of flipper panel
Left hand corner illustrated
Shower screen supplied separately

Product Code

300mm flipper panel	**09FH-300FP**

Floor to Ceiling Grab Pole

Features & Benefits

- Connects to the glass shower screen to act as a grab rail & provide additional stability for a user when entering or exiting the shower area
- 32mm diameter, cut to length, stainless steel
- 2500mm length option available
- Solid brass, chrome plated lugs are rebated to accept an 8mm shower screen
- UKCA & CE Approved as a grab rail
- Internal floor fixing & external ceiling fixing with 80mm diameter shroud
- Gap between floor to ceiling grab pole and screen edge: 40mm
- Ideal for use or retro-fitting to an Opulence Wet Room Shower Screen or similar plain edged, 8mm shower screen
- Projection from edge of glass shower screen to outer edge of pole = 72mm
- Can be cut to required floor to ceiling height (cut from the top down)

Grab pole illustrated with shower screen, left hand corner illustrated
Shower screen supplied separately

Product Code

2500mm Floor-to-Ceiling Grab Pole	**GD-GP**

Level Best

A single wall-mounted glass screen that can be used in a wet room or with a tray installation, adding a stylish finish to your bathroom.

+ Simple, single panel glass screen
+ Available with a deflector panel for water retention
+ Strong, 6mm toughened glass for increased safety
+ Can be used with a shower tray or in a wet room
+ Lifetime warranty

Level Best: Option GA

Features & Benefits

- Compatible with wet floors and vinyl flooring
- Offers a wider choice in creating a modern bathroom
- Corner radius blocks can be cut to accommodate vinyl flooring curvature
- Silver chrome finish aluminium frame offers a stylish finish to any bathroom
- 6mm toughened glass offers safety and peace of mind
- 18mm compensator adjustment on wall fixing designed to accommodate uneven walls
- Stay clear coating on both sides means that the glass is easier to clean, remains cleaner for longer and has reduced growth of bacteria

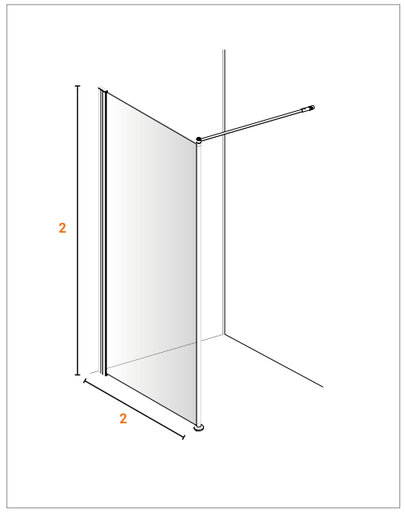

Dimensions, Size Options & Product Codes:

Shower Tray Size Options:	1	2	Code:
Will fit most tray sizes*	700mm	1900mm	LB00215
	800mm	1900mm	LB00216
	900mm	1900mm	LB00217
	1000mm	1900mm	LB00218

Level Best Screen Black	1	2	Code:
Will fit most trays sizes**	800mm	1900mm	LB00216BK
	900mm	1900mm	LB00217BK
	1000mm	1900mm	LB00218BK

Accessories:	Code:
1200 Link Bar	10-010-841
For Level Best and Level Best Deflector:	
Glass Screen 1200mm Long Link Bar + Wall Brace Kit	LB00166
Glass Screen 1200mm Long Link Bar + Wall Brace Kit - Black	LB00166BK

*Tray must be longer than screen ordered. **Dimension range is -0/+18mm.

SHOWER SCREENS & ENCLOSURES LEVEL BEST

Level Best: Glass Deflector Screen

Features & Benefits

- Compatible with wet floors and vinyl flooring
- Offers a wider choice in creating a modern bathroom
- Corner radius blocks can be cut to accommodate vinyl flooring curvature
- Silver chrome finish aluminium frame or black frame offers a stylish finish to any bathroom
- 6mm toughened glass offers safety and peace of mind
- 18mm compensator adjustment on wall fixing designed to accommodate uneven walls
- Stay clear coating on both sides (doesn't apply to black screen option) means that the glass is easier to clean, remains cleaner for longer and has reduced growth of bacteria
- Deflector screen creates an added water barrier for protection
- Rising butt hinge ensure easy opening and closing of the panel which rotates 250° and locks at 90° on each side

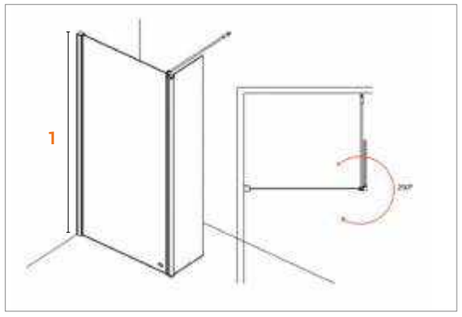

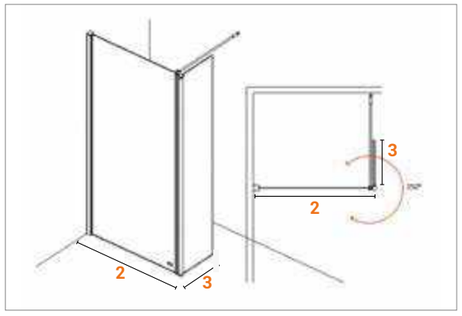

Deflector panel can not be retro-fitted.

Dimensions, Size Options & Product Codes:

Shower Tray Size Options:	1	2	3	Code:
Will fit most tray sizes	1900mm	700mm	350mm	27020
	1900mm	800mm	350mm	27021
	1900mm	900mm	350mm	27022
	1900mm	1000mm	350mm	27028

Level Best Glass Deflector Screen – Black	1	2	Code:
Will fit most tray sizes*	1900mm	800mm + 400mm Deflector	27018BK
	1900mm	900mm + 400mm Deflector	27031BK
	1900mm	1000mm + 400mm Deflector	27017BK

Screens are not coated

Accessories:	Code:
LB Deflector to Ceiling Kit - Chrome	15-010-099

*Tray must be longer than screen ordered. **Dimension range is -0/+18mm.

Standard

All our standard shower screens are designed specifically for the mobility and domestic markets and are both extremely practical and stylish. Screens include 180° rising butt hinges and 360° bi-fold hinge.

+ 360° Bi-fold doors maximise access by opening inward and outwards
+ PET frosted panels provide shatterproof glazing and added safety
+ Multiple configurations available to accommodate every application
+ Doors are easy to operate with rising butt hinges
+ In addition to standard screens, AKW offer a made-to-measure screen service and can manufacture almost any screen combination to your requirements
+ Screens manufactured from September 2022 will be supplied with handles and latches fitted to the screen
+ Lifetime warranty

WF For Contour screen option equivalents look out for this blue icon

AKW Standard Shower Screens

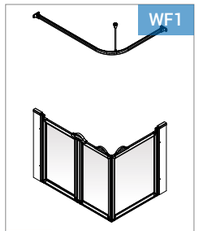

A Shower Screen page 193

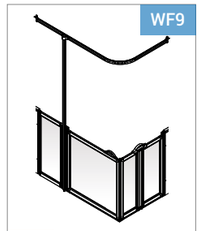

B Shower Screen page 194

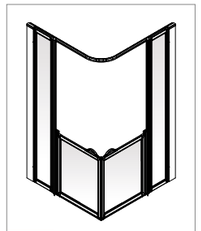

BF Shower Screen page 195

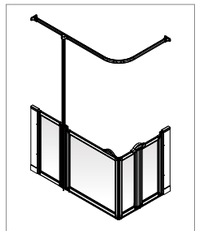

BW Wet Floor Screen page 194

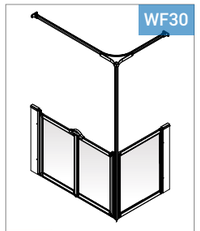

C Shower Screen page 196

E5 Shower Screen page 202

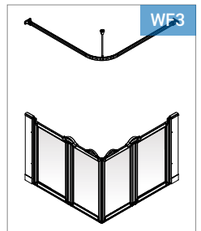

EW Wet Floor Screen page 198

EW5 Wet Floor Screen page 202

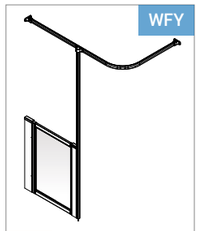

H Shower Screen page 204

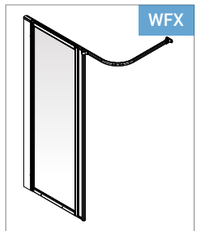

HF Shower Screen page 204

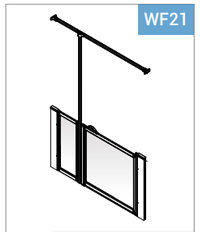

J Shower Screen page 208

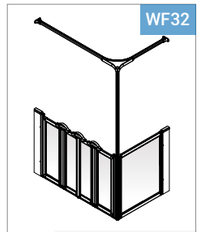

K Shower Screen page 209

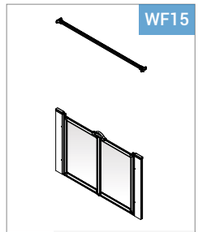

M Shower Screen page 210

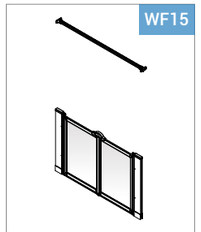

MW Wet Floor Screen page 211

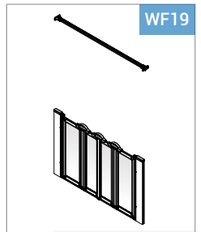

N Shower Screen page 213

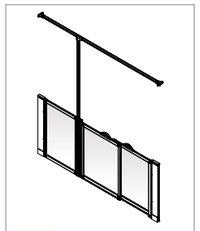

PW Wet Floor Screen page 215

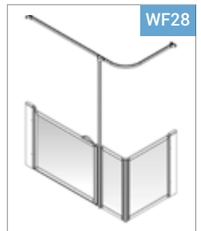

Q Shower Screen page 216

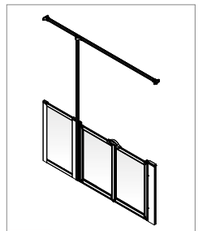

TT Shower Screen page 217

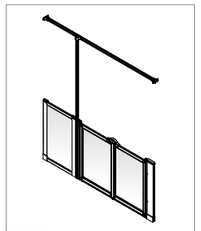

TTW Wet Floor Screen page 217

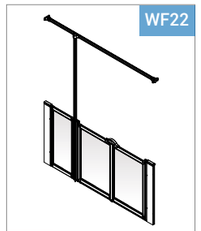

U Shower Screen page 218

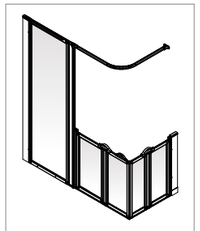

XF Shower Screen page 221

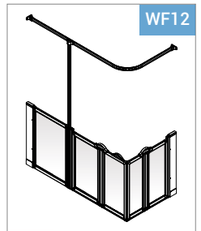

XW Wet Floor Screen page 221

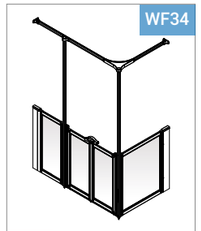

Y Shower Screen page 222

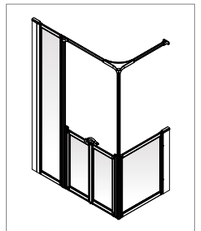

YF Shower Screen page 223

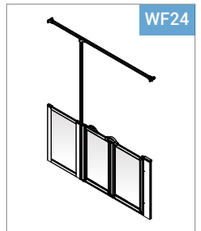

Z Shower Screen page 224

SCREENS

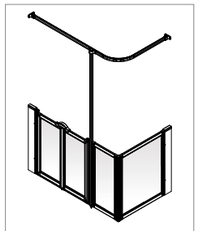

D Shower Screen page 197

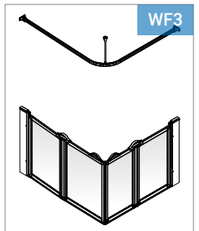

E Shower Screen page 198

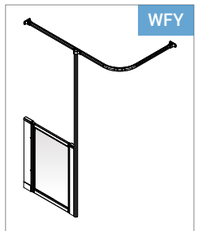

HW Wet Floor Screen page 204

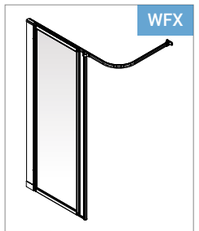

HFW Wet Floor Screen page 204

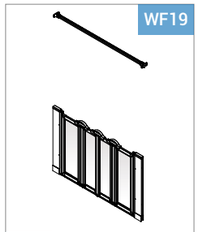

NW Wet Floor Screen page 213

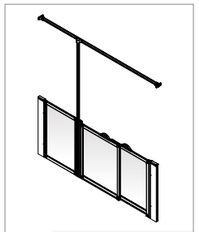

P Shower Screen page 215

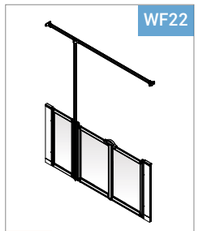

UW Wet Floor Screen page 219

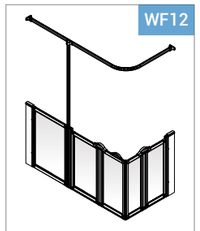

X Shower Screen page 221

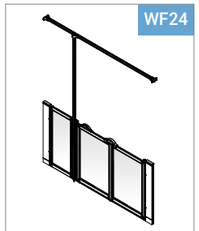

ZUW Wet Floor Screen page 225

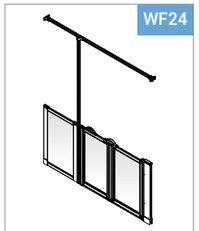

ZW Wet Floor Screen page 225

AKW Silverdale® Shower Screens

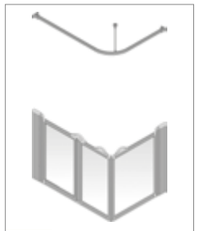

A Shower Screen page 193

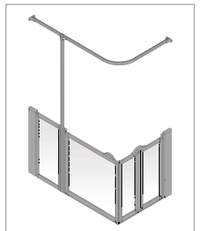

B Shower Screen page 195

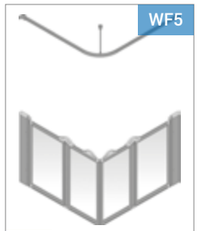

E Shower Screen page 198

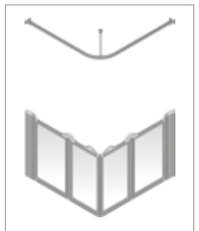

EW Wet Floor Screen page 198

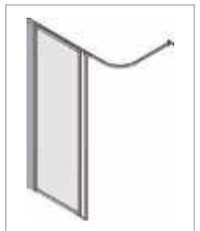

HF Wet Floor Screen page 204

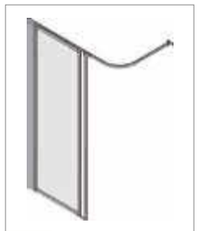

HFW Wet Floor Screen page 204

M Wet Floor Screen page 211

MW Shower Screen page 211

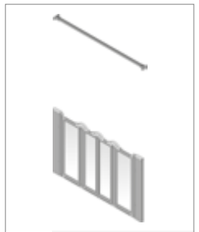

N Shower Screen page 213

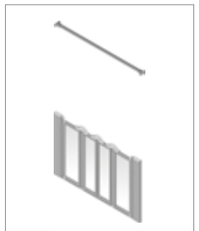

NW Wet Floor Screen page 213

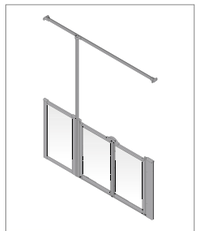

TT Shower Screen page 217

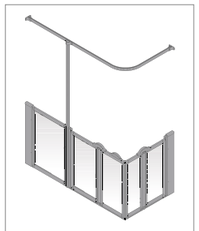

X Shower Screen page 221

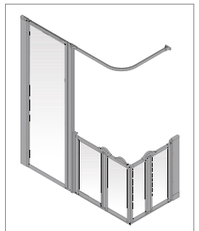

XF Wet Floor Screen page 221

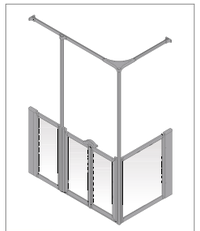

Y Wet Floor Screen page 222

WF
Contour Screen Equivalent

SCREENS

Dimensions, Size Options & Product Code

WF Screen table

WF1	Option A or MM3 (Corner Bifold, Single Door Return)
WF2	MM2 (Corner Single Door, Single Door Return)
WF3	Option E or MM4 (Corner, Twin Bifold)
WF4	Option E5 or MM5 (Corner Trifold, Bifold Return)
WF5	Option SE
WF6	MM4 (Corner Fixed Panel, Post, Wrap Around Bifold Door, Fixed Return)
WF7	MM3 (Corner Fixed Panel, Bifold Return)
WF8	MM3 (Corner Fixed Panel, Post, Single Door, Single Door Return)
WF9	Option B or MM4 (Corner Fixed Panel, Post, Single Door, Bifold Return)
WF10	MM4 (Corner Fixed Panel, Post, Wrap Around Door, Bifold Door Return)
WF11	MM3 (Corner Fixed Panel, Upright Pole, Single Door, Single Door Return)
WF12	Option X or MM5 (Corner Fixed Panel, Upright Pole, Bifold Door, Bifold Door Return)
WF13	MM4 (Corner Fixed Panel, Upright Pole, Wrap Around Door, Bifold Door Return)
WF14	MM1 (Alcove Single Door)
WF15	Option M or MM2 (Alcove Bipart Door)
WF16	MM2 (Alcove Single Bifold Door)
WF17	MM3 (Alcove Bifold Door, Single Door)
WF18	MM3 (Alcove Single Trifold Door)
WF19	Option N or MM4 (Alcove Double Bifold Doors)
WF20	Option SM
WF21	Option J or MM2 (Alcove Fixed Panel, Upright Pole, Single Door)
WF22	Option U or MM3 (Alcove Fixed Panel, Upright Pole, Bipart Door)
WF23	MM2 (Alcove Fixed panel, Upright Pole, Door Closing to Wall)
WF24	Option Z or MM3 (Alcove Fixed Panel, Upright Pole, Bifold Door)
WF25	MM3 (Alcove Fixed Panel, Upright Pole, Bifold Door Closing to Wall)
WF26	MM4 (Alcove Fixed Panel, Upright Pole, Centralised Bipart Door, Upright Pole, Fixed Panel)
WF27	Option SJ
WF28	Option Q or MM3 (Corner Single Door, Upright Pole, Fixed Panel, Fixed Return)
WF29	MM2 (Corner Single Door, Upright Pole, Fixed Return)
WF30	Option C or MM3 (Corner Bipart Door, Upright Pole, Fixed Return)
WF31	MM3 (Corner Bifold, Upright Pole, Fixed Return)
WF32	Option K or MM5 (Corner Twin Bifold, Upright Pole, Fixed Return)
WF33	MM4 (Corner Fixed Panel, Upright Pole, Bifold Door, Upright Pole, Fixed Return)
WF34	Option Y or MM4 (Corner Fixed Panel, Upright Pole, Bipart Door, Upright Pole, Fixed Return)
WF35	MM5 (Alcove Fixed Panel, Upright Pole, Twin Bifold Doors)
WFX	Option HF or MM1 (Full Height Fixed Panel, Upright Pole)
WFY	Option H or MM1 (Half Height Fixed Panel, Upright Pole)

Made-to-measure screens

In addition to standard screens, AKW offer a made-to-measure screen service and can manufacture almost any screen combination to your requirements. Below are illustrations of some of the more typical requirements. Shower curtains, rails and poles are also made to measure, and can be ordered at the length and height required.

Specifying made-to-measure shower screens

When specifying for AKW trays, please state:

+ Tray type
+ Tray size
+ Tray handing (if any)
+ Accurate drawing (giving measurements for panel and post sizes or door entry width)

When specifying for wet floor areas, consider:

+ Rise and fall hinges to clear the floor
+ Corner blocks. Trim on site to fit the corner radius on safety flooring
+ Accurate drawing required

When specifying for wall-to-wall screens, we need:

+ Wall-to-wall measurements at floor height and at the screen height (750mm, 900mm or 1880mm), after completion of wall tiling

Ordering made-to-measure shower screens

01905 823 299

01905 823 297

orders@akw-ltd.co.uk

Some bespoke sizes are available for next day using stocked screens placed before 11am (with agreed specification and material availability).

AKW can make special screens to fit safety floors or any of our trays. Alternatively if you require a different screen configuration and can provide us with an accurate drawing, we will be able to quote for individual requirements.

Note: Made-to-measure screens are non-returnable and non-refundable.

Download the **made-to-measure order form** from the made-to-measure section on our website.

Option MM1/MM1F

Features & Benefits

+ One part door or panel
+ Various sizes and configurations available
+ Half (MM1) and full-height (MM1F) options available

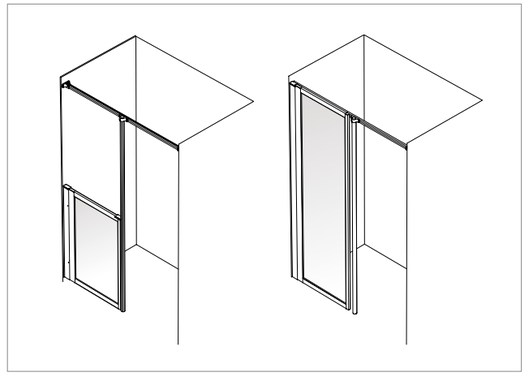

Product Codes

Half-height M-to-M Screen MM1	**91160**
Full-height M-to-M Screen MM1F	**91161**
Half-height M-to-M Silverdale® Screen MM1	**91160S**
Full-height M-to-M Silverdale® Screen MM1F	**91161S**

WF MM1/ MM1F can be used for the following Contour screen options: WF14, WFX, WFY

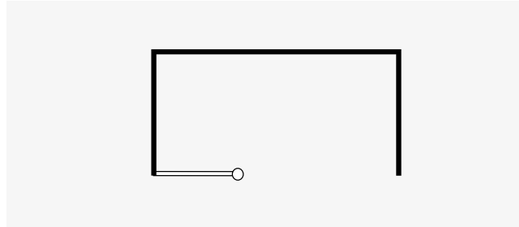

Option MM2/MM2F

Features & Benefits

+ Two part doors or panels
+ Various sizes and configurations available
+ Half (MM2) and full-height (MM2F) options available

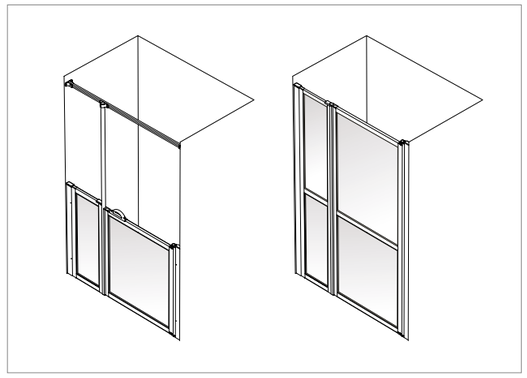

Product Codes

Half-height M-to-M Screen MM2	**91162**
Full-height M-to-M Screen MM2F	**91163**
Half-height M-to-M Silverdale® Screen MM2	**91162S**
Full-height M-to-M Silverdale® Screen MM2F	**91163S**

WF MM2 / MM2F can be used for the following Contour screen options: WF2, WF15, WF16, WF21, WF23, WF29

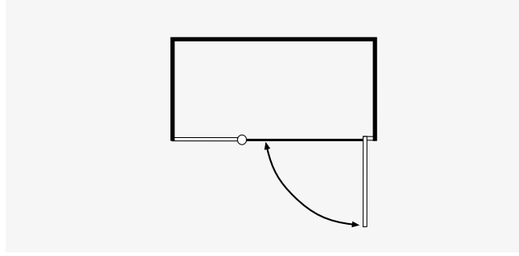

SCREENS

Option MM3/MM3F

Features & Benefits

+ Three sections using doors or panels
+ Various sizes and configurations available
+ Half (MM3) and full-height (MM3F) options available

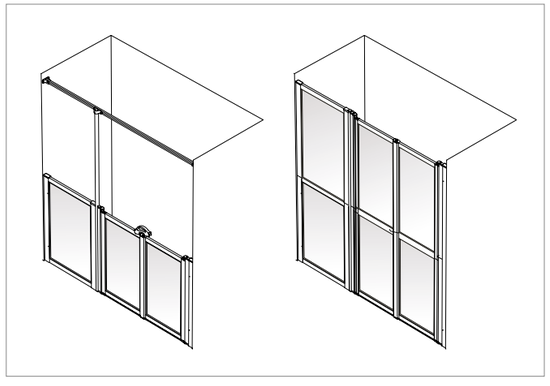

Product Codes

Half-height M-to-M Screen MM3	**91164**
Full-height M-to-M Screen MM3F	**91165**
Half-height M-to-M Silverdale® Screen MM3	**91164S**
Full-height M-to-M Silverdale® Screen MM3F	**91165S**

WF MM3/MM3F can be used for the following Contour screen options: WF1, WF7, WF8, WF11, WF17, WF18, WF22, WF25, WF28, WF30, WF31

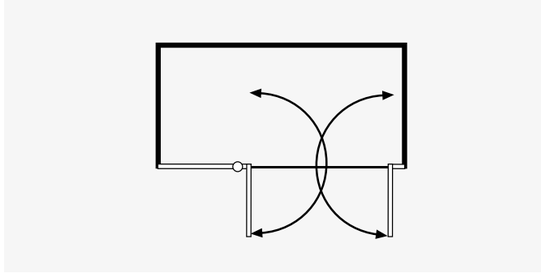

Option MM4

Features & Benefits

+ Four part using doors or panels
+ Various sizes and configurations available
+ Bi-fold only available at half-height
+ Minimum width: 1160mm

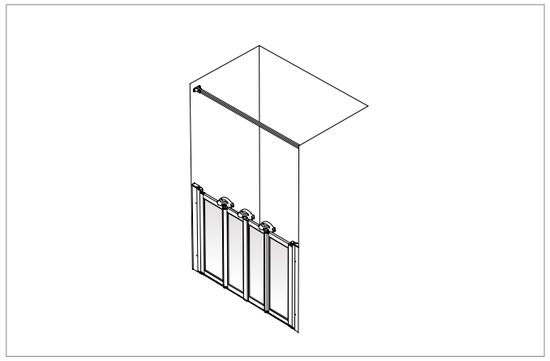

Product Codes

Half-height M-to-M Screen MM4	**91166**
Half-height M-to-M Silverdale® Screen MM4	**91166S**

WF MM4 can be used for the following Contour screen options: WF3, WF6, WF9, WF10, WF13, WF19, WF26, WF33, WF34

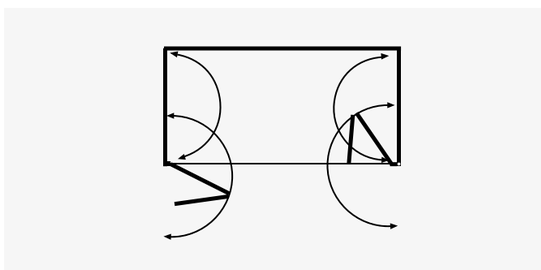

SCREENS

Option MM5

Features & Benefits

+ Five parts using doors or panels
+ Various sizes and configurations available
+ Bi-fold only available at half-height
+ Minimum width: 1160mm

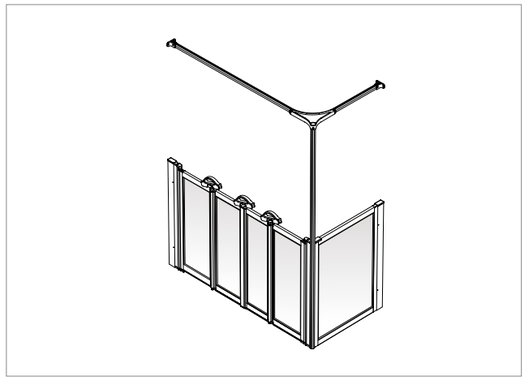

Product Codes

Half-height M-to-M Screen MM5	**91167**
Half-height M-to-M Silverdale® Screen MM5	**91167S**

WF MM5 can be used for the following Contour Screen options: WF4, WF12, WF32

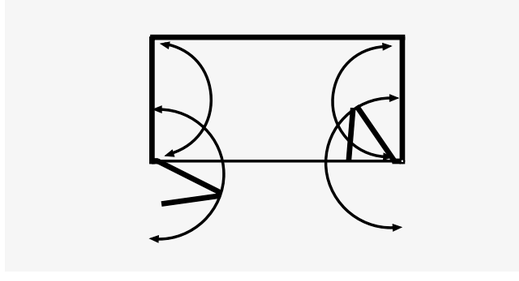

Made to Measure Screen Limitations/Exceptions

We can make almost any configuration required.
Scan the QR code to the right to view the limitations and exceptions.

Standard Shower Screens

Silverdale® Shower Screens

Standard: Option A

A A

Features & Benefits

+ Bi-fold door to '1/2' side opening in/out
+ Single door to '3' side opening in and out
+ Handed
+ Suitable for shower trays

Specifications

L-shaped curtain rail supplied

Latch and handles are included with Option A screens

Drop rod is 600mm

1800mm wide x 2000mm drop curtains supplied

Contour Screen Compatibility:

WF1

Left-handed (A)

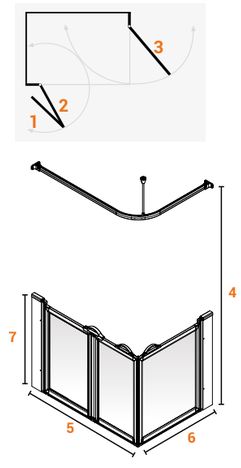

Right-handed (A)

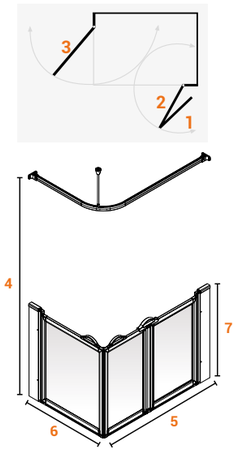

UK CA | CE

Dimensions, Size Options & Product Codes:

Option A Standard	1	2	3	4	5	6	7	
							750mm	900mm
1000 x 700mm	432mm	477mm	615mm	1880mm	1000mm	700mm	**91001L/R**	**91002L/R**
1200 x 700mm	532mm	577mm	615mm	1880mm	1200mm	700mm	**91003L/R**	**91004L/R**
1200 x 760mm	532mm	577mm	615mm	1880mm	1200mm	760mm	**91188L/R**	**91189L/R**
1300 x 700mm	582mm	627mm	615mm	1880mm	1300mm	700mm	**91005L/R**	**91006L/R**

Option A Silverdale®	1	2	3	4	5	6	7	
							750mm	900mm
1000 x 700mm	432mm	477mm	615mm	1880mm	1000mm	700mm	**91001LSC/F*** **91001RSC/F***	**91002LSC/F*** **91002RSC/F***
1200 x 700mm	532mm	577mm	615mm	1880mm	1200mm	700mm	**91003LSC/F*** **91003RSC/F***	**91004LSC/F*** **91004RSC/F***
1300 x 700mm	582mm	627mm	615mm	1880mm	1300mm	700mm	**91005LSC/F*** **91005RSC/F***	**91006LSC/F*** **91006RSC/F***

Please note: Compensators are set at mid point giving 14.5mm in and out adjustment on both sides. **Extra wide compensators are not available for Silverdale® screens.** L/R in the product code denotes whether the screen is Left or Right handed. 760mm tray is achieved with extra wide compensator which is supplied as standard.

*C/F in the product code denotes whether the screen has a Clear or Frosted finish.

B | BF | BW | B

Standard: Option B

Left-handed (B/BW)

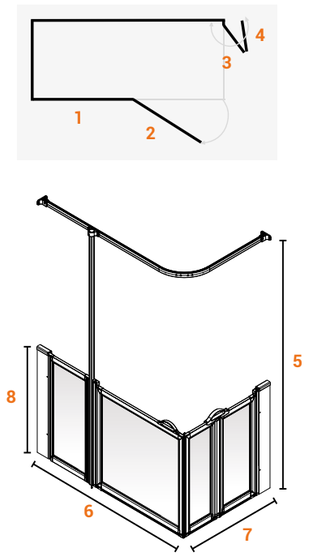

Right-handed (B/BW)

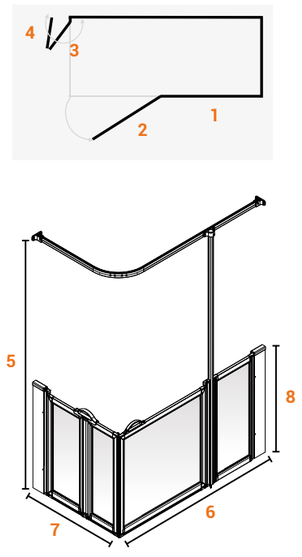

Non-handed (BF)

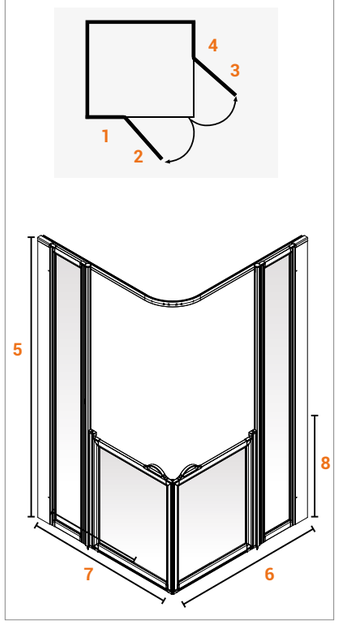

Contour Screen Compatibility:

WF9

Features & Benefits

- Option B and BW: side panel with single door to '6' side opening in and out and bi-fold doors to '7' side opening in and out
- Option BF: bi-parting doors to '6' and '7' sides, opening in and out
- Half height (B) or full height (BF) options available
- Option B screens are left or right-handed, BF screens are non-handed
- Options available for use with shower trays (B) and wet floors (BW)
- Option BW is supplied with special corner blocks designed to be trimmed on site to accommodate any radius to coved slip-resistant flooring

Specifications

Option BF not suitable for use with wet floors

L-shaped curtain rail supplied

Handles are included with Option B screens

Latches are included with Option BW screens

Standard 1800mm wide x 1800mm drop shower curtains supplied

Silverdale® Option B only available in frosted glazing

Please note: If you require a different size screen, poles or curtain we can accommodate this. Please refer to Made-to-Measure Screens on **page 188**

Standard & Silverdale®: Option B, BF, BW

Option B Standard	1	2	3	4	5	6	7	8 750mm	8 900mm
Option BF 1000 x 1000mm	500mm	457mm	457mm	500mm	1880mm	1000mm	1000mm	**91023N**	**91024N**
Option B 1200 x 700mm	412mm	749mm	327mm	282mm	1880mm	1200mm	700mm	**91007L/R**	**91009L/R**
Option B 1200 x 760mm	412mm	749mm	327mm	282mm	1880mm	1200mm	760mm	**91194L/R**	**91195L/R**
Option B 1200 x 820mm	412mm	749mm	387mm	342mm	1880mm	1200mm	820mm	**91008L/R**	**91010L/R**
Option B 1300 x 700mm	692mm	565mm	327mm	282mm	1880mm	1300mm	700mm	**91168L/R**	**91169L/R**
Option B 1420 x 700mm	692mm	685mm	327mm	282mm	1880mm	1420mm	700mm	**91013L/R**	**91015L/R**
Option B 1420 x 820mm	692mm	685mm	387mm	342mm	1880mm	1420mm	820mm	**91014L/R**	**91016L/R**
Option B 1500 x 700mm	764mm	693mm	327mm	282mm	1880mm	1500mm	700mm	**91017L/R**	**91019L/R**
Option B 1700 x 700mm	810mm	847mm	327mm	282mm	1880mm	1700mm	700mm	**91021L/R**	**91022L/R**
Option BW 1400 x 900mm	696mm	665mm	427mm	382mm	1880mm	1400mm	900mm	**91011L/R**	**91012L/R**
Option BW 1500 x 820mm	764mm	693mm	387mm	342mm	1880mm	1500mm	820mm	**91018L/R**	**91020L/R**
Option BF 1050 x 1050mm	550mm	457mm	457mm	550mm	1880mm	1050mm	1050mm	**91200N**	**91201N**
Option B 1250 x 750mm	462mm	749mm	327mm	282mm	1880mm	1250mm	750mm	**91196L/R**	**91197R***
Option B 1470 x 750mm	742mm	685mm	327mm	282mm	1880mm	1470mm	750mm	**91198L/R**	**91199L***

Option B Silverdale®	1	2	3	4	5	6	7	8 900mm
1420 x 700mm	692mm	685mm	327mm	282mm	1880mm	1420mm	700mm	**91015LSF/RSF**

Please note: Compensators are set at mid point giving 14.5mm in and out adjustment on both sides.
Extra wide compensators are not available for Silverdale® screens.
760mm tray is achieved with extra wide compensator which is supplied as standard.

Screens include extra wide compensator

L/R in the product code denotes whether the screen is Left or Right handed.

*900mm Option B 1250 x 750mm is only available right handed.
900mm Option B 1470 x 750mm is only available left handed.

C

Standard: Option C

Features & Benefits

+ Folding doors and fixed panel to '4' side and fixed panel '5' side
+ Handed
+ Suitable for shower trays

Specifications

L-shaped curtain rail supplied

Handles are an optional extra

Standard 1800mm wide x 1800mm drop shower curtains supplied

Contour Screen Compatibility:

WF30

Left-handed (C)

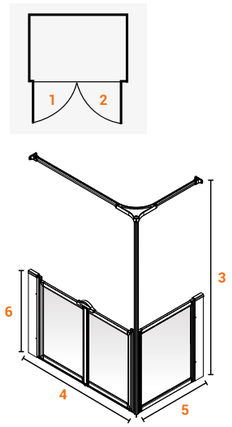

Right-handed (C)

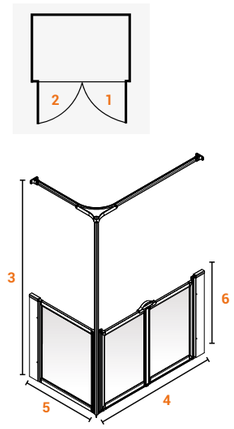

UK CA | CE

SCREENS

Dimensions, Size Options & Product Codes:

Option C Standard	1	2	3	4	5	6	
						750mm	900mm
1000 x 700mm	453mm	453mm	1880mm	1000mm	700mm	**91025L/R**	**91027L/R**
1000 x 1000mm	453mm	453mm	1880mm	1000mm	1000mm	**91026L/R**	**91028L/R**
1200 x 650mm	553mm	553mm	1880mm	1200mm	650mm	**91029L/R**	**91032L/R**
1200 x 700mm	553mm	553mm	1880mm	1200mm	700mm	**91030L/R**	**91033L/R**
1200 x 760mm	553mm	553mm	1880mm	1200mm	760mm	**91204L/R**	**91205L/R**
1200 x 820mm	553mm	553mm	1880mm	1200mm	820mm	**91031L/R**	**91034L/R**
1300 x 700mm	603mm	603mm	1880mm	1300mm	700mm	**91035L/R**	**91037L/R**
1300 x 820mm	603mm	603mm	1880mm	1300mm	820mm	**91036L/R**	**91038L/R**
1050 x 1050mm	453mm	453mm	1880mm	1050mm	1050mm	**91202L/R**	**91203R***
1250 x 750mm	553mm	553mm	1880mm	1250mm	750mm	**91206L/R**	**91207L/R**
1350 x 750mm	603mm	603mm	1880mm	1300mm	750mm	**91208L/R**	**91209L/R**

Screens include extra wide compensator

L/R in the product code denotes whether the screen is Left or Right handed.
*900mm Option C 1050 x 1050mm is only available right handed.

Please note: 760mm tray is achieved with extra wide compensator which is supplied as standard. Compensators are set at mid point giving 14.5mm in and out adjustment on both sides.

D

Standard: Option D

Features & Benefits

+ Folding doors and fixed panel to '4' side and fixed panel '5' side
+ Handed
+ Suitable for shower trays

Specifications

L-shaped curtain rail supplied

Handles are an optional extra

Standard 1800mm wide x 1800mm drop shower curtains supplied

Left-handed (D)

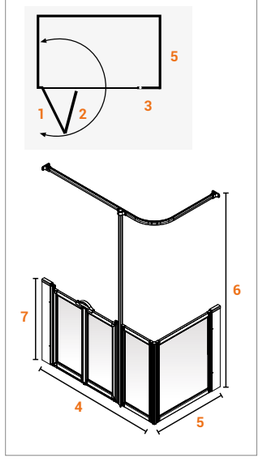

Right-handed (D)

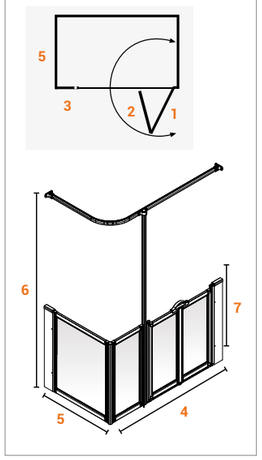

UK CA | CE

SCREENS

Dimensions, Size Options & Product Codes:

Option D Standard	1	2	3	4	5	6	7	
							750mm	900mm
1200 x 700mm	374mm	339mm	398mm	1200mm	700mm	1880mm	**91039L/R**	**91040L/R**
1200 x 760mm	374mm	339mm	398mm	1200mm	760mm	1880mm	**91210L/R**	**91211L/R**
1300 x 700mm	424mm	389mm	398mm	1300mm	700mm	1880mm	**91388L/R**	**-**
1250 x 750mm	374mm	339mm	398mm	1250mm	750mm	1880mm	**91212L/R**	**91213R***

Please note: 760mm tray is achieved with extra wide compensator which is supplied as standard. Compensators are set at mid point giving 14.5mm in and out adjustment on both sides.

Screens include extra wide compensator

E | EW | E | EW

Standard & Silverdale®: Option E

Left-handed (E/EW)

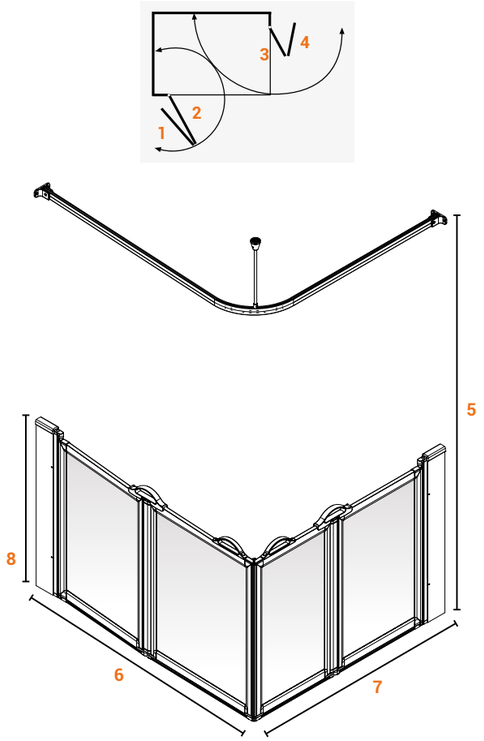

Right-handed (E/EW)

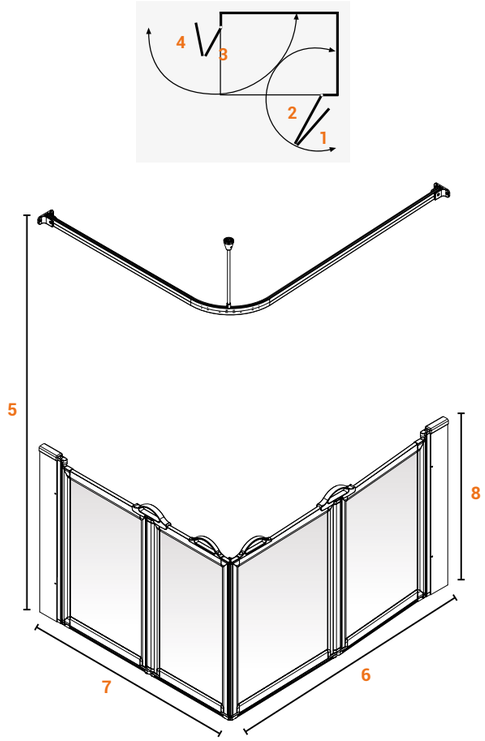

Contour Screen Compatibility:

WF3

Features & Benefits

+ Bi-fold doors to '6' and '7' sides
+ Handed and non-handed
+ Options available for wet floors and shower trays
+ Option EW supplied with trimmable corner blocks designed to accommodate coved vinyl flooring

Specifications

L-shaped curtain rail supplied

Handles are included with Option E screens

Drop rod is 600mm

1800mm wide x 2000mm drop curtains supplied

Silverdale® options are available in clear or frosted glazing

Please note: 760mm tray is achieved with extra wide compensator which is supplied as standard.

SCREENS

Dimensions, Size Options & Product Codes:

Option E Standard	1	2	3	4	5	6	7	8	
								750mm	900mm
E 795 x 795mm	330mm	375mm	375mm	330mm	1880mm	795mm	795mm	**91405N**	–
E 800 x 800mm	332mm	377mm	377mm	332mm	1880mm	800mm	800mm	**91041N**	**91042N**
E 820 x 820mm	342mm	387mm	387mm	342mm	1880mm	820mm	820mm	**91043N**	**91044N**
E 900 x 900mm	382mm	427mm	427mm	382mm	1880mm	900mm	900mm	**91045N**	**91046N**
E 945 x 945mm	405mm	450mm	450mm	405mm	1880mm	945mm	945mm	**91404N**	–
E 1000 x 700mm	432mm	477mm	327mm	282mm	1880mm	1000mm	700mm	**91047L/R**	**91049L/R**
E 1000 x 1000mm	432mm	477mm	477mm	432mm	1880mm	1000mm	1000mm	**91048N**	**91050N**
E 1000 x 800mm	432mm	477mm	377mm	332mm	1880mm	1000mm	800mm	**91319L/R**	**91320L/R**
E 1095x 795mm	480mm	525mm	375mm	330mm	1880mm	1095mm	795mm	**1402L/R**	–
E 1200 x 700mm	532mm	577mm	327mm	282mm	1880mm	1200mm	700mm	**91053L/R**	**91057L/R**
E 1200 x 750mm	532mm	577mm	352mm	307mm	1880mm	1200mm	750mm	**91406L/R**	–
E 1200 x 760mm	532mm	577mm	327mm	282mm	1880mm	1200mm	760mm	**91216L/R**	**91217L/R**
E 1200 x 800mm	532mm	577mm	450mm	405mm	1880mm	1200mm	800mm	**91404L/R**	–
E 1200 x 820mm	532mm	577mm	387mm	342mm	1880mm	1200mm	820mm	**91054L/R**	**91058L/R**
E 1200 x 900mm	532mm	577mm	427mm	382mm	1880mm	1200mm	900mm	**91056L/R**	**91391L/R**
E 1295 x 795mm	580mm	625mm	350mm	305mm	1880mm	1295mm	795mm	**91403L/R**	–
E 1300 x 700mm	582mm	627mm	327mm	282mm	1880mm	1300mm	700mm	**91061L/R**	**91063L/R**
E 1300 x 800mm	582mm	627mm	377mm	332mm	1880mm	1300mm	800mm	**91407L/R**	–
E 1300 x 820mm	582mm	627mm	387mm	342mm	1880mm	1300mm	820mm	**91062L/R**	**91064L/R**

Screens include extra wide compensator

Please note: Compensators are set at mid point giving 14.5mm in and out adjustment on one side. Screen width needs to be less than the length of the tray and provide adequate access for user.

Dimensions, Size Options & Product Codes:

Option E Standard	1	2	3	4	5	6	7	8	
								750mm	900mm
EW 900 x 800mm	382mm	427mm	377mm	332mm	1880mm	900mm	800mm	**91326L/R**	–
EW 900 x 900mm	382mm	427mm	427mm	382mm	1880mm	900mm	900mm	**91171N**	**91170N**
EW 990 x 990mm	427mm	472mm	472mm	427mm	1880mm	990mm	990mm	**91329N**	–
EW 1000 x 900mm	432mm	477mm	427mm	382mm	1880mm	1000mm	900mm	**91328L/R**	–
EW 1000 x 1000mm	432mm	477mm	477mm	432mm	1880mm	1000mm	1000mm	**91173N**	**91172N**
EW 1135 x 700mm	500mm	545mm	327mm	282mm	1880mm	1135mm	700mm	**91325L/R**	–
EW 1135 x 770mm	500mm	545mm	362mm	317mm	1880mm	1135mm	770mm	**91051L/R**	**91052L/R**
EW 1200 x 820mm	532mm	577mm	377mm	332mm	1880mm	1200mm	820mm	**91327L/R**	–
EW 1200 x 900mm	577mm	532mm	427mm	382mm	1880mm	1200mm	900mm	**91348L/R**	–
EW 1200 x 1000mm	532mm	577mm	477mm	432mm	1880mm	1200mm	1000mm	**91324L/R**	–
EW 1200 x 1200mm	532mm	577mm	577mm	532mm	1880mm	1200mm	1200mm	**91055N**	**91059N**
EW 1290 x 790mm	577mm	672mm	372mm	327mm	1880mm	1290mm	790mm	**91346L/R**	–
EW 1300 x 820mm	582mm	627mm	387mm	342mm	1880mm	1300mm	820mm	**91175L/R**	**91174L/R**
EW 1400 x 900mm	632mm	677mm	427mm	382mm	1880mm	1400mm	900mm	**91065L/R**	**91066L/R**
EW 1485 x 800mm	720mm	675mm	377mm	332mm	1880mm	1485mm	800mm	**91347L/R**	–
EW 1500 x 820mm	682mm	727mm	387mm	342mm	1880mm	1500mm	820mm	**91067L/R**	**91068L/R**
EW 1500 x 1200mm	727mm	682mm	577mm	532mm	1880mm	1500mm	1200mm	**91349L/R**	–
E 1050 x 1050mm	432mm	477mm	477mm	432mm	1880mm	1050mm	1050mm	**91214N**	**91215N**
E 1250 x 750mm	532mm	577mm	327mm	282mm	1880mm	1250mm	750mm	**91218L/R**	**91219L/R**
E 1350 x 750mm	382mm	627mm	327mm	282mm	1880mm	1350mm	750mm	**91220L/R**	**91221R***

Screens include extra wide compensator

Please note: Compensators are set at mid point giving 14.5mm in and out adjustment on one side. Screen width needs to be less than the length of the tray and provide adequate access for user.

Dimensions, Size Options & Product Codes:

Option E Silverdale®	1	2	3	4	5	6	7	8	
								750mm	900mm
E 800 x 800mm	332mm	377mm	377mm	332mm	1880mm	800mm	800mm	**91041NSC/F***	**91042NSC/F***
E 820 x 820mm	342mm	387mm	387mm	342mm	1880mm	820mm	820mm	**91043NSC/F***	**91044NSC/F***
E 900 x 900mm	382mm	427mm	427mm	382mm	1880mm	900mm	900mm	**91045NSC/F***	**91046NSC/F***
E 1000 x 700mm	432mm	477mm	327mm	282mm	1880mm	1000mm	700mm	**91047LSC/F*** **91047RSC/F***	**91049LSC/F*** **91049RSC/F***
E 1000 x 1000mm	432mm	477mm	477mm	432mm	1880mm	1000mm	1000mm	**91048NSC/F***	**91050NSC/F***
E 1200 x 700mm	532mm	577mm	327mm	282mm	1880mm	1200mm	700mm	**91053LSC/F*** **91053RSC/F***	**91057LSC/F*** **91057RSC/F***
E 1200 x 800mm	532mm	577mm	377mm	332mm	1880mm	1200mm	800mm	– –	**91391LSC/F*** **91391RSC/F***
E 1200 x 820mm	532mm	577mm	387mm	342mm	1880mm	1200mm	820mm	**91054LSC/F*** **91054RSC/F***	**91058LSC/F*** **91058RSC/F***
E 1200 x 900mm	532mm	577mm	427mm	382mm	1880mm	1200mm	900mm	**91056LSC/F*** **91056RSC/F***	**91060LSC/F*** **91060RSC/F***
E 1300 x 700mm	582mm	627mm	327mm	282mm	1880mm	1300mm	700mm	**91061LSC/F*** **91061RSC/F***	**91063LSC/F*** **91063RSC/F***
E 1300 x 820mm	582mm	627mm	387mm	342mm	1880mm	1300mm	820mm	**91062LSC/F*** **91062RSC/F***	**91064LSC/F*** **91064RSC/F***
EW 900 x 900mm	382mm	427mm	427mm	382mm	1880mm	900mm	900mm	**91171NSC/F***	**91170NSC/F***
EW 1000 x 1000mm	432mm	477mm	477mm	432mm	1880mm	1000mm	1000mm	**91173NSC/F***	**91172NSC/F***
EW 1135 x 770mm	500mm	545mm	362mm	317mm	1880mm	1135mm	770mm	**91051LSC/F*** **91051RSC/F***	**91052LSC/F*** **91052RSC/F***
EW 1200 x 1200mm	532mm	577mm	577mm	532mm	1880mm	1200mm	1200mm	**91055NSC/F***	**91059NSC/F***
EW 1300 x 820mm	582mm	627mm	387mm	342mm	1880mm	1300mm	820mm	**91175LSC/F*** **91175RSC/F***	**91174LSC/F*** **91174RSC/F***
EW 1400 x 900mm	632mm	677mm	427mm	382mm	1880mm	1400mm	900mm	**91065LSC/F*** **91065RSC/F***	**91066LSC/F*** **91066RSC/F***
EW 1500 x 820mm	682mm	727mm	387mm	342mm	1880mm	1500mm	820mm	**91067LSC/F*** **91067RSC/F***	**91068LSC/F*** **91068RSC/F***

E5 EW5

Standard: Option E5

Features & Benefits

+ Tri-fold doors to '7' and bi-fold doors to '8' sides
+ Options available for wet floors and shower trays
+ Option EW5 supplied with special corner blocks to be trimmed to accommodate any radius to coved slip resistant flooring

Left-handed (E5/EW5)

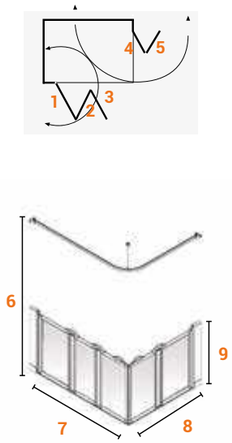

Right-handed (E5/EW5)

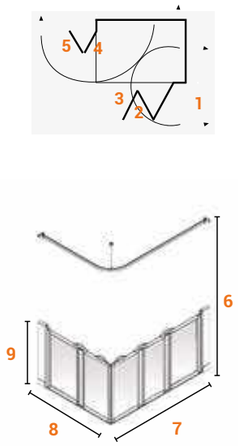

Specifications

L-shaped curtain rail supplied

Handles and latches are included with Option E screens

Standard 1800mm wide x 1800mm drop shower curtains supplied

Contour Screen Compatibility:

WF4

UK CA | CE

Dimensions, Size Options & Product Codes:

Option E5 Standard	1	2	3	4	5	6	7	8	9 750mm
E5 1000 x 700mm	–	–	–	–	–	1880mm	1000mm	700mm	**91408L/R**
E5 1095 x 795mm	–	–	–	–	–	1880mm	1095mm	795mm	**91409L/R**
E5 1200 x 800mm	–	–	–	–	–	1880mm	1200mm	800mm	**91410L/R**
E5 1200 x 900mm	–	–	–	–	–	1880mm	1200mm	900mm	**91411L/R**
E5 1200 x 820mm	390mm	373mm	345mm	387mm	342mm	1880mm	1200mm	820mm	**91381L/R**
E5 1400 x 900mm	457mm	439mm	412mm	427mm	382mm	1880mm	1400mm	900mm	**91383L/R**
EW5 1200 x 750mm	–	–	–	–	–	1880mm	1200mm	750mm	**91412L/R**
EW5 1200 x 820mm	390mm	373mm	345mm	387mm	342mm	1880mm	1200mm	820mm	**91384L/R**
EW5 1200 x 900mm	–	–	–	–	–	1880mm	1200mm	900mm	**91413L/R**
EW5 1300 x 820mm	424mm	406mm	379mm	387mm	342mm	1880mm	1300mm	820mm	**91385L/R**
EW5 1300 x 800mm	–	–	–	–	–	1880mm	1300mm	800mm	**91414L/R**
EW5 1400 x 900mm	457mm	439mm	412mm	427mm	382mm	1880mm	1400mm	900mm	**91386L/R**

Please note: Compensators are set at mid point giving 14.5mm in and out adjustment on one side. Screen width needs to be less than the length of the tray and provide adequate access for user.

If you require a different size screen, poles or curtain we can accommodate this. Please refer to Made-to-Measure Screens on **page 188**.

L/R in the product code denotes whether the screen is Left or Right handed.

H | HW | HF | HFW | HF | HFW

Standard & Silverdale®: Option H / HW / HF / HFW

Left-handed (H/HW)

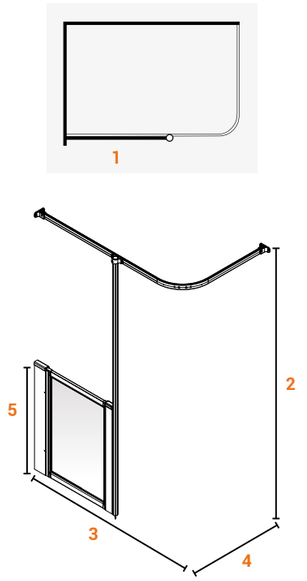

Right-handed (H/HW)

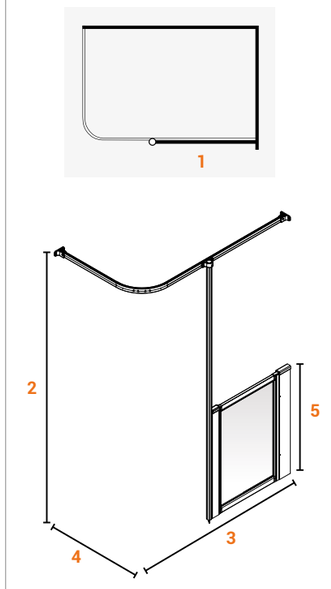

Non-handed (HF/HFW)

UK CA | CE

Features & Benefits

+ Half (H) or full-height (HF) options available
+ Handed and non-handed options
+ Options available for wet floors and shower trays
+ Fits most tray sizes LH and RH
+ Wet floor option (HW/HFW) supplied with special corner blocks designed to be trimmed on site, to accommodate any radius to coved slip-resistant flooring

Specifications

L-shaped curtain rail supplied

Option H/HW is supplied with 1 x 1400mm and 1 x 1900mm drop curtains

Option HF/HFW is supplied with 1 x 1900mm drop curtains

Silverdale® option HF available in clear or frosted glazing

Contour Screen Compatibility:

WFX

SCREENS

Dimensions, Size Options & Product Codes:

Option H Standard	1*	2	3	4	5	
					750mm	900mm
Will fit most tray sizes	**H** 600mm	1880mm	Will fit most tray sizes	Will fit most tray sizes	**91069L/R**	**91074L/R**
	H 700mm	1880mm			**91070L/R**	**91075L/R**
	H 800mm	1880mm			**91071L/R**	**91076L/R**
	H 900mm	1880mm			**91072L/R**	**91077L/R**
	H 1000mm	1880mm			**91073L/R**	**91078L/R**
	HW 300mm	1880mm			**–**	**91330L/R**
	HW 400mm	1880mm			**91331L/R**	**–**
	HW 600mm	1880mm			**91232L/R**	**91233L/R**
	HW 700mm	1880mm			**91234L/R**	**91235L/R**
	HW 800mm	1880mm			**91236L/R**	**91237L/R**
	HW 900mm	1880mm			**91238L/R**	**91239L/R**
	HW 1000mm	1880mm			**91240L/R**	**91241L/R**
	H 650mm	1880mm			**91222L/R**	**91223L/R**
	H 750mm	1880mm			**–**	**91225R***
	H 850mm	1880mm			**91226R***	**91227L***
	H 950mm	1880mm			**–**	**91229R***

Screens include extra wide compensator

Please note: Compensators are set at mid point giving 14.5mm in and out adjustment on one side. Screen width needs to be less than the length of the tray and provide adequate access for user.

Please note: If you require a different size screen, poles or curtain we can accommodate this. Please refer to Made-to-Measure Screens on **page 188**.

***Column 1:** Includes 32mm post.

L/R in the product code denotes whether the screen is Left or Right handed.
*900mm Option H 750mm is only available right handed.
900mm Option H 850mm is only available left handed.
900mm Option H 950mm is only available right handed.

Standard: Option HF

Option HF Standard	1*	2	3	4	Code:
Will fit all tray sizes	**HF** 600mm	Will fit all tray sizes	Will fit all tray sizes	1880mm	**91079N**
	HF 700mm			1880mm	**91080N**
	HF 800mm			1880mm	**91081N**
	HF 900mm			1880mm	**91082N**
	HF 1000mm			1880mm	**91083N**
	HFW 600mm			1880mm	**91247N**
	HFW 700mm			1880mm	**91248N**
	HFW 800mm			1880mm	**91249N**
	HFW 900mm			1880mm	**91250N**
	HFW 1000mm			1880mm	**91251N**
	HF 650mm			1880mm	**91242N**
	HF 750mm			1880mm	**91243N**
	HF 850mm			1880mm	**91244N**
	HF 950mm			1880mm	**91245N**
	HF 1050mm			1880mm	**91246N**
	HF 600mm			1880mm	**91387N**

Screens include extra wide compensator

Model features a straight rail rather than curved

Please note: Compensators are set at mid point giving 14.5mm in and out adjustment on one side. Screen width needs to be less than the length of the tray and provide adequate access for user. **Extra wide compensators are not available for Silverdale® screens.** 760mm tray is achieved with extra wide compensator which is supplied as standard.

***Column 1:** Includes 55mm gap and 32mm post.

**C/F in the product code denotes whether the screen has a Clear or Frosted finish.

L/R in the product code denotes whether the screen is Left or Right handed.

Silverdale®: Option HF

Option HF Silverdale®	1*	2	3	4	Code:
Will fit most tray sizes	**HF** 600mm	1880mm	Will fit most tray sizes	Will fit most tray sizes	**91079NSC/F****
	HF 700mm	1880mm			**91080NSC/F****
	HF 800mm	1880mm			**91081NSC/F****
	HF 900mm	1880mm			**91082NSC/F****
	HF 1000mm	1880mm			**91083NSC/F****
	HFW 400mm	1870mm			**91345NSF*****
	HFW 600mm	1870mm			**91247NSC/F****
	HFW 700mm	1870mm			**91248NSC/F****
	HFW 800mm	1870mm			**91249NSC/F****
	HFW 900mm	1870mm			**91250NSC/F****
	HFW 1000mm	1870mm			**91251NSC/F****

Screens include extra wide compensator

Model features a straight rail rather than curved

Please note: Compensators are set at mid point giving 14.5mm in and out adjustment on one side. Screen width needs to be less than the length of the tray and provide adequate access for user. **Extra wide compensators are not available for Silverdale® screens.**

***Column 1:** Includes 55mm gap and 32mm post.

**C/F in the product code denotes whether the screen has a Clear or Frosted finish.

***400mm width screen currently only available in Frosted finish.

J

Standard: Option J

Features & Benefits

+ Fixed panel with single door opening out only
+ Handed
+ Suitable for shower trays

Specifications

L-shaped curtain rail supplied can be cut to fit

Handles are included with Option J screens

Standard 1800mm wide x 1800mm drop shower curtains supplied

WF21

Left-handed

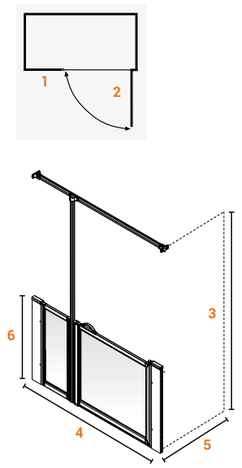

Right-handed

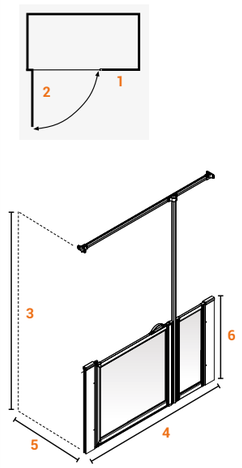

UK CA | CE

Dimensions, Size Options & Product Codes:

Option J Standard	1	2	3	4	5	6	
						750mm	900mm
1300mm	417mm	799mm	1880mm	1300mm	700mm	**91084L/R**	**91085L/R**
1420mm	537mm	799mm	1880mm	1420mm	700mm	**91086L/R**	**91087L/R**
1700mm	755mm	861mm	1880mm	1700mm	700mm	**91088L/R**	**91089L/R**
1350mm	467mm	799mm	1880mm	1350mm	750mm	**91252L***	**91253L/R**
1470mm	587mm	799mm	1880mm	1470mm	750mm	**91254L***	**–**

Screens include extra wide compensator

Please note: Compensators are set at mid point giving 14.5mm in and out adjustment on both sides.

L/R in the product code denotes whether the screen is Left or Right handed.

*750mm Option J 1350mm is only available left handed.
750mm Option J 1470mm is only available left handed.

K

Standard: Option K

Features & Benefits

+ Double bi-fold doors to '6' side opening in and out, fixed side panel to '5'
+ Handed
+ Suitable for shower trays

Specifications

L-shaped curtain rail supplied

Handles are included with Option K screens

Standard 1800mm wide x 1800mm drop shower curtains supplied

WF32

Left-handed

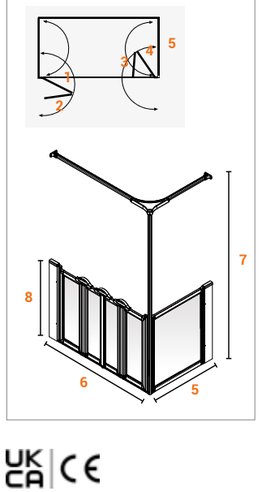

Right-handed

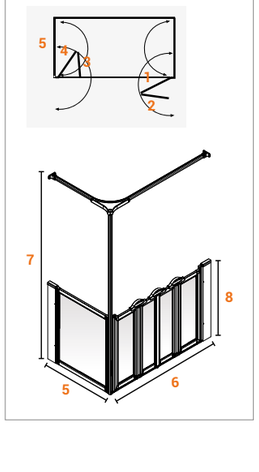

UK CA | CE

Dimensions, Size Options & Product Codes:

Option K Standard	1	2	3	4	5	6	7	8	
								750mm	900mm
1200 x 650mm	295mm	260mm	260mm	295mm	650mm	1200mm	1880mm	**91090L/R**	**91092L/R**
1200 x 700mm	295mm	260mm	260mm	295mm	700mm	1200mm	1880mm	**91091L/R**	**91093L/R**
1200 x 760mm	295mm	260mm	260mm	295mm	760mm	1200mm	1880mm	**91256L/R**	**91257L/R**
1420 x 700mm	350mm	315mm	315mm	350mm	700mm	1420mm	1880mm	**91094L/R**	**91096L/R**
1420 x 820mm	350mm	315mm	315mm	350mm	820mm	1420mm	1880mm	**91095L/R**	**91097L/R**
1700 x 700mm	420mm	385mm	385mm	420mm	700mm	1700mm	1880mm	**91098L/R**	**91099L/R**
1250 x 750mm	295mm	260mm	260mm	295mm	750mm	1250mm	1880mm	**91258R***	**–**
1470 x 750mm	350mm	315mm	315mm	350mm	750mm	1470mm	1880mm	**91260L/R**	**91261L/R**

Screens include extra wide compensator

Please note: 760mm tray is achieved with extra wide compensator which is supplied as standard. Compensators are set at mid point giving 14.5mm in and out adjustment on both sides.

L/R in the product code denotes whether the screen is Left or Right handed.

*750mm Option K 1250x750mm is only available right handed.

Please note: If you require a different size screen, poles or curtain we can accommodate this. Please refer to Made-to-Measure Screens on **page** 188.

M MW M MW

Standard & Silverdale®: Option M

Non-handed

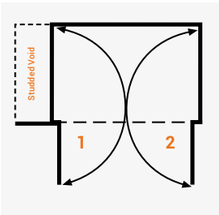

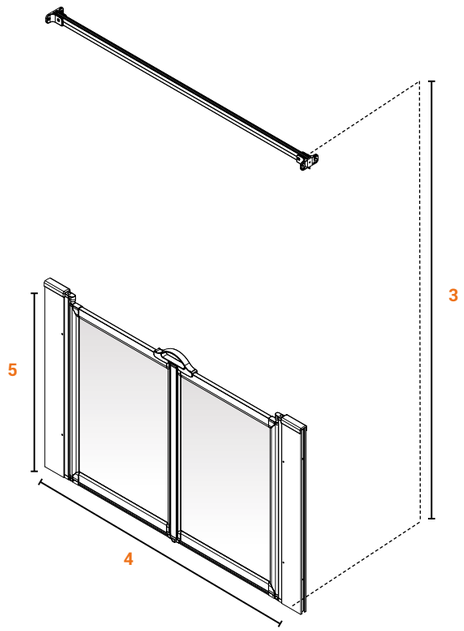

UK CA CE

Features & Benefits

+ Bi-parting doors opening in and out
+ Non-handed
+ Options available for wet floors (MW) and shower trays (M)
+ Wet floor option (MW) supplied with special corner blocks designed to be trimmed on site, to accommodate any radius to coved slip-resistant flooring

Specifications

L-shaped curtain rail supplied

Option H/HW is supplied with 1 x 1400mm and 1 x 1900mm drop curtains

Option HF/HFW is supplied with 1 x 1900mm drop curtains

Silverdale® option available in clear or frosted glazing

Supplied with an oversized L-shaped curtian rail that can be trimmed down to a straight rail as required

WF15

SCREENS

Standard & Silverdale®: Option M, MW

Option M Standard	1	2	3	4	5	
					750mm	900mm
M 800mm	347mm	347mm	1880mm	800mm	**91104N**	**91109N**
M 900mm	397mm	397mm	1880mm	900mm	**91100N**	**91105N**
M 1000mm	447mm	447mm	1880mm	1000mm	**91101N**	**91106N**
M 1200mm	547mm	547mm	1880mm	1200mm	**91102N**	**91107N**
M 1300mm	597mm	597mm	1880mm	1300mm	**91103N**	**91108N**
MW 1100mm**	497mm	497mm	1880mm	1100mm	**91350N**	–
MW 1200mm	547mm	547mm	1880mm	1200mm	**91177N**	**91176N**
M 1050mm	447mm	447mm	1880mm	1050mm	**91262N**	**91263N**
M 1250mm	547mm	547mm	1880mm	1250mm	**91264N**	**91265N**
M 1350mm	597mm	597mm	1880mm	1350mm	**91266N**	**91267N**

Option M Silverdale®	1	2	3	4	5	
					750mm	900mm
M 800mm	347mm	347mm	1880mm	800mm	**91104NSC/F***	**91109NSC/F***
M 900mm	397mm	397mm	1880mm	900mm	**91100NSC/F***	**91105NSC/F***
M 1000mm	447mm	447mm	1880mm	1000mm	**91101NSC/F***	**91106NSC/F***
M 1200mm	547mm	547mm	1880mm	1200mm	**91102NSC/F***	**91107NSC/F***
M 1300mm	597mm	597mm	1880mm	1300mm	**91103NSC/F***	**91108NSC/F***
MW 1200 x 1200mm	547mm	547mm	1880mm	1200mm	**91177NSC/F***	**91176NSC/F***

Screens include extra wide compensator

Please note: Compensators are set at mid point giving 14.5mm in and out adjustment on both sides.
Extra wide compensators are not available for Silverdale® screens.
*C/F in the product code denotes whether the screen has a Clear or Frosted finish.
**Supplied with a L-shaped rail

N NW N NW

Standard & Silverdale®: Option N

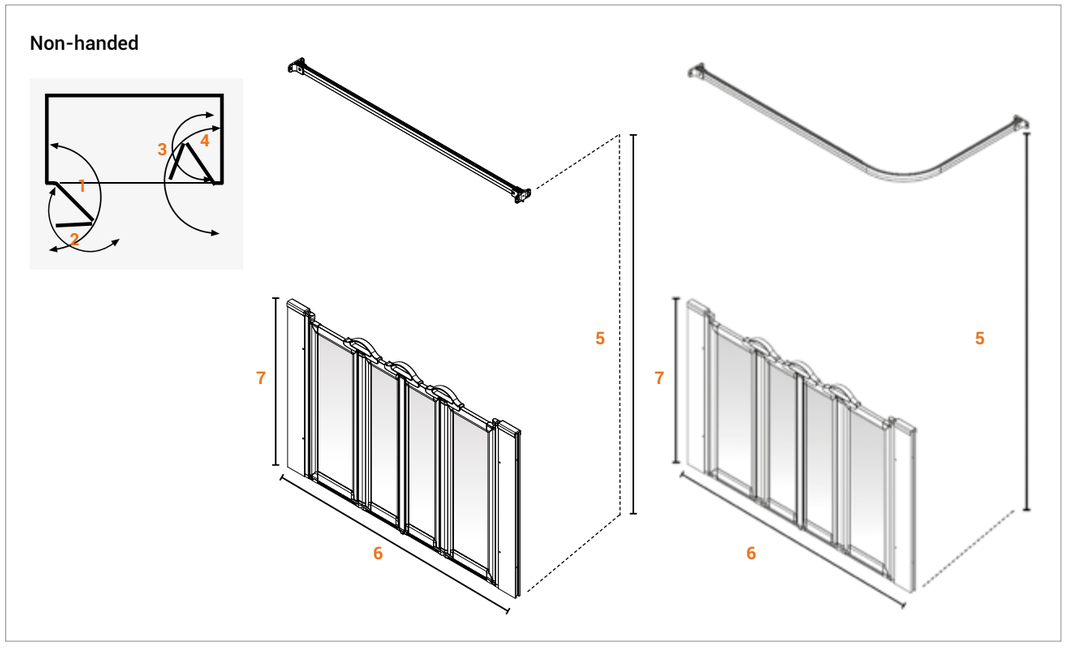

UK CA CE

Features & Benefits

+ Double bi-fold doors opening in and out
+ Non-handed
+ Options available for wet floors (NW) and shower trays (N)
+ Wet floor option supplied with special corner blocks designed to be trimmed on site, to accommodate any radius to coved slip-resistant flooring

Specifications

L-shaped curtain rail supplied

1800mm wide x 2000mm drop curtains supplied

Silverdale® option available in clear or frosted glazing

Supplied with an oversized L-shaped curtian rail that can be trimmed down to a straight rail as required

WF19

Standard: Option N, NW

Option N Standard	1	2	3	4	5	6	7	
							750mm	900mm
N 1000mm	–	–	–	–	1880mm	1000mm	**91415N**	–
N 1200mm	292mm	257mm	257mm	292mm	1880mm	1200mm	**91110N**	**91118N**
N 1300mm	317mm	282mm	282mm	317mm	1880mm	1300mm	**91111N**	**91119N**
N 1400mm	–	–	–	–	1880mm	1400mm	**91429N**	–
N 1420mm	347mm	312mm	312mm	347mm	1880mm	1420mm	**91113N**	**91121N**
N 1500mm	367mm	332mm	332mm	367mm	1880mm	1500mm	**91114N**	**91122N**
N 1600mm	392mm	357mm	357mm	392mm	1880mm	1600mm	–	**91321N**
N 1700mm	417mm	382mm	382mm	417mm	1880mm	1700mm	**91117N**	**91124N**
N 1800mm	–	–	–	–	1880mm	1800mm	**91417N**	–
NW 1000mm	–	–	–	–	1880mm	1000mm	**91419N**	–
NW 1150mm	279mm	244mm	244mm	279mm	1880mm	1150mm	**91351N**	–
NW 1200mm	292mm	257mm	257mm	292mm	1880mm	1200mm	**91352N**	–
NW 1250mm	304mm	269mm	269mm	304mm	1880mm	1250mm	**91353N**	–
NW 1300mm	317mm	282mm	282mm	317mm	1880mm	1300mm	**91179N**	**91178N**
NW 1350mm	329mm	294mm	294mm	329mm	1880mm	1350mm	**91354N**	–
NW 1400mm	347mm	312mm	312mm	347mm	1880mm	1400mm	**91112N**	**91120N**
NW 1450mm	354mm	319mm	319mm	354mm	1880mm	1450mm	**91355N**	–
NW 1500mm	367mm	332mm	332mm	367mm	1880mm	1500mm	**91181N**	**91180N**
NW 1550mm	379mm	344mm	344mm	379mm	1880mm	1550mm	**91356N**	–
NW 1600mm	392mm	357mm	357mm	392mm	1880mm	1600mm	**91323N**	**91123N**
NW 1650mm	404mm	369mm	369mm	404mm	1880mm	1650mm	**91357N**	–
NW 1700mm	417mm	382mm	382mm	417mm	1880mm	1700mm	**91332N**	–
NW 1750mm	429mm	394mm	394mm	429mm	1880mm	1750mm	**91358N**	–
NW 1800mm	442mm	407mm	407mm	442mm	1800mm	1800mm	**91333N**	**91334N**
N 1250mm	292mm	257mm	257mm	292mm	1880mm	1250mm	**91268N**	**91269N**
N 1350mm	317mm	282mm	282mm	317mm	1880mm	1350mm	**91270N**	**91271N**
N 1470mm	347mm	312mm	312mm	347mm	1880mm	1470mm	**91272N**	**91273N**

Screens include extra wide compensator

Please note: Compensators are set at mid point giving 14.5mm in and out adjustment on both sides.

Silverdale®: Option N, NW

Option N Silverdale®	1	2	3	4	5	6	7	
							750mm	900mm
N 1200mm	292mm	257mm	257mm	292mm	1880mm	1200mm	**91110NSC/F***	**91118NSC/F***
N 1300mm	317mm	282mm	282mm	317mm	1880mm	1300mm	**91111NSC/F***	**91119NSC/F***
N 1420mm	347mm	312mm	312mm	347mm	1880mm	1420mm	**91113NSC/F***	**91121NSC/F***
N 1500mm	367mm	332mm	332mm	367mm	1880mm	1500mm	**91114NSC/F***	**91122NSC/F***
N 1700mm**	417mm	382mm	382mm	417mm	1880mm	1700mm	**91117NSC/F***	**91124NSC/F***
NW 1300mm	317mm	282mm	282mm	317mm	1880mm	1300mm	**91179NSC/F***	**91178NSC/F***
NW 1400mm	347mm	312mm	312mm	347mm	1880mm	1400mm	**91112NSC/F***	**91120NSC/F***
NW 1500mm	367mm	332mm	332mm	367mm	1880mm	1500mm	**91181NSC/F***	**91180NSC/F***
NW 1600mm**	392mm	357mm	357mm	392mm	1880mm	1600mm	**91323NSC/F***	**91123NSC/F***

Model features a straight rail rather than curved

Please note: Compensators are set at mid point giving 14.5mm in and out adjustment on both sides. **Extra wide compensators are not available for Silverdale® screens.**

*C/F in the product code denotes whether the screen has a Clear or Frosted finish.

**Straight curtain rail supplied.

SCREENS

P PW

Standard: Option P

Features & Benefits

+ Fixed side panel '1', overlapping doors '2/3'
+ Handed
+ Options available for wet floors (PW) and shower trays (P)
+ Wet floor option supplied with special corner blocks designed to be trimmed on site, to accommodate any radius to coved slip-resistant flooring

Specifications

Straight curtain rail supplied, can be cut to fit

Option H/HW is supplied with 1 x 1400mm and 1 x 1900mm drop curtains

Option HF/HFW is supplied with 1 x 1900mm drop curtains

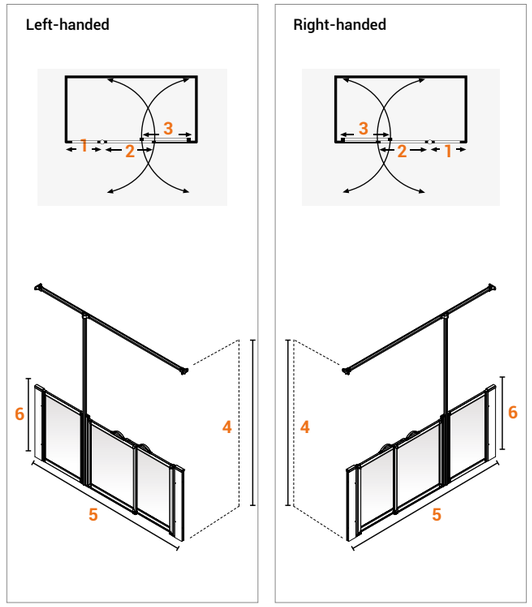

UK CA | CE

Dimensions, Size Options & Product Codes:

Option P Standard	1	2	3	4	5*	6	
						750mm	900mm
P 1800mm	560mm	560mm	641mm	1880mm	1500-1800mm	**91125L/R**	**91126L/R**
PW 1800mm	560mm	629mm	641mm	1880mm	1500-1800mm	**91183L/R**	**91182L/R**
1850 x 750mm	610mm	629mm	641mm	1880mm	1550-1850mm	**91274L/R**	**91275L/R**

Screens include extra wide compensator

Please note: Compensators are set at mid point giving 14.5mm in and out adjustment on both sides.

***Column 5:** measurements account for adjustment with overlapping doors.

Overlapping doors enable the Option P screen set to be adjusted on site to accommodate different alcove widths. This avoids the need for accurate pre-measurement and specially made screens.

L/R in the product code denotes whether the screen is Left or Right handed.

SCREENS

Q

Standard: Option Q

Features & Benefits

+ Folding door and fixed panel to '5' side and fixed panel '6' side
+ Handed
+ Suitable for shower trays

Specifications

L-shaped curtain rail supplied

Handles are included with Option Q screens

Standard 1800mm wide x 1800mm drop shower curtains supplied

WF28

Left-handed

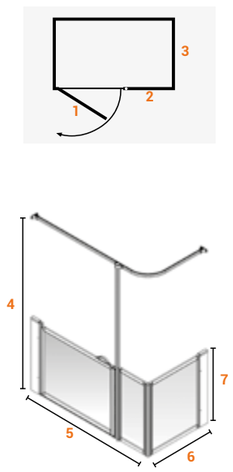

Right-handed

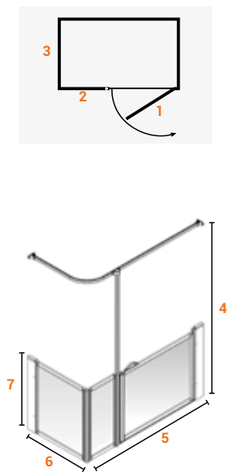

UK CA | CE

Dimensions, Size Options & Product Codes:

Option Q Standard	1	2	3	4	5	6	7	
							750mm	900mm
1300 x 700mm	862mm	342mm	694mm	1880mm	1300mm	700mm	**91335L/R**	–
1420 x 700mm	862mm	462mm	694mm	1880mm	1420mm	700mm	**91336L/R**	–

Please note: If you require a different size screen, poles or curtain we can accommodate this.
Please refer to Made-to-Measure Screens on **page** 188.

TT TTW TT

Standard: Option TT

Features & Benefits

+ Trimmable panel with bi-parting doors, opening in and out
+ Handed
+ Options available for wet floors (TTW) and shower trays (TT)

Specifications

Straight curtain rail supplied

Latch included (additional handles are optional extras)

Standard 1800mm wide x 1800mm drop shower curtains supplied

Silverdale® option available frosted glazing only

Left-handed

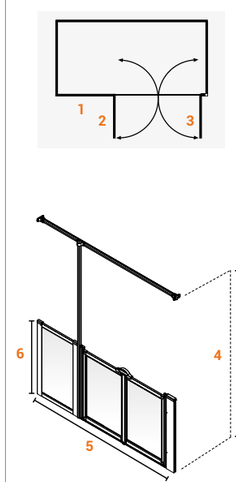

Right-handed

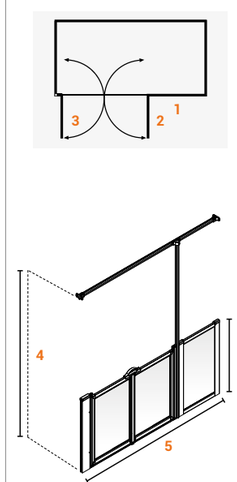

UK CA | CE

Dimensions, Size Options & Product Codes:

Option TT Standard	1*	2	3	4	5**	6	
						750mm	900mm
TT 1800-1500mm	685-385mm	517mm	517mm	1880mm	1800-1500mm	**91127L/R**	**91128L/R**
TTW 1800-1500mm	685mm	517mm	517mm	1880mm	1800-1500mm	**91185L/R**	**91184L/R**

Option TT Silverdale®	1*	2	3	4	5**	6
						900mm
1800-1500mm	685-385mm	517mm	517mm	1880mm	1800-1500mm	**91128LSF/RSF**

Please note: Compensators are set at mid point giving 14.5mm in and out adjustment on door side only. Option TT/TTW screens can be used with Pipe Ducted trays on door side only. **Extra wide compensators are not available for Silverdale® screens.** All options Patented GB 2429030.

***Column 1:** Adjustment range of trimmable panel.

****Column 5:** Measurements account for adjustment (on door side only) with trimmable panel.

Option TT screen, handed, with bi-parting doors to give 900mm clear entry path, opening in and out.
Fixed panel is trimmable on-site to suit alcove situations.

L/R in the product code denotes whether the screen is Left or Right handed.

Please note: If you require a different size screen, poles or curtain we can accommodate this.
Please refer to Made-to-Measure Screens on **page** 188.

U UW

Standard: Option U

Left-handed

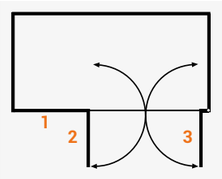

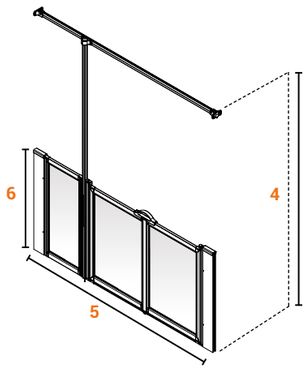

Right-handed

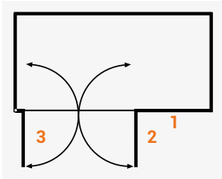

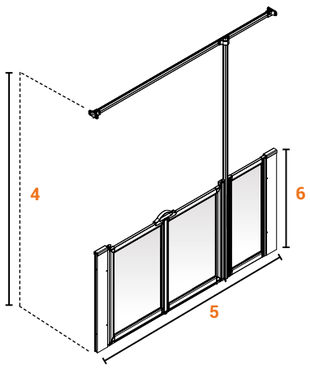

Features & Benefits

+ Fixed panel with bi-parting doors, opening in and out
+ Handed
+ Options available for wet floors (UW) and shower trays (U)
+ Special corner blocks designed to be trimmed on site to accommodate any radius to coved slip-resistant flooring

Specifications

L-shaped curtain rail supplied – can be trimmed on site

Latches are included with Option U screens

Standard 1800mm wide x 1800mm drop shower curtains supplied

WF22

Standard: Option U, UW

Shower Tray Size Options:	1	2	3	4	5	6	
						750mm	900mm
U 1300mm	422mm	411mm	411mm	1880mm	1300mm	**91129L/R**	**91131L/R**
U 1420mm	485mm	439mm	439mm	1880mm	1420mm	**91130L/R**	**91132L/R**
UW 1300mm	500mm	372mm	372mm	1880mm	1300mm	**91359L/R**	–
UW 1350mm	500mm	397mm	397mm	1880mm	1350mm	**91360L/R**	–
UW 1500mm	500mm	472mm	472mm	1880mm	1500mm	**91361L/R**	–
UW 1550mm	500mm	497mm	497mm	1880mm	1550mm	**91362L/R**	–
UW 1600mm	500mm	522mm	522mm	1880mm	1600mm	**91363L/R**	–
UW 1650mm	500mm	547mm	547mm	1880mm	1650mm	**91364L/R**	–
UW 1700mm	500mm	572mm	572mm	1880mm	1700mm	**91365L/R**	–
UW 1750mm	500mm	597mm	597mm	1880mm	1750mm	**91366L/R**	–
UW 1800mm	500mm	622mm	622mm	1880mm	1800mm	**91367L/R**	–
U 1350mm	472mm	411mm	411mm	1880mm	1350mm	**91276L/R**	**91277L/R**
U 1470mm	535mm	439mm	439mm	1880mm	1470mm	**91278L/R**	**91279L/R**

Screens include extra wide compensator

Please note: Compensators are set at mid point giving 14.5mm in and out adjustment on both sides.

L/R in the product code denotes whether the screen is Left or Right handed.

Please note: If you require a different size screen, poles or curtain we can accommodate this.
Please refer to Made-to-Measure Screens on **page 188**.

X | XW | XF | X | XF

Standard & Silverdale®: Option X

Left-handed

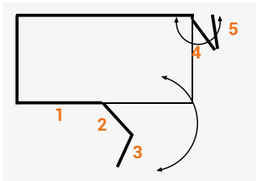

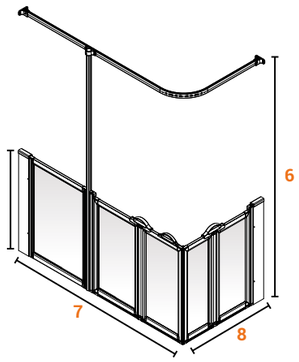

Right-handed

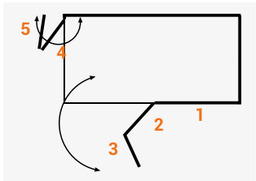

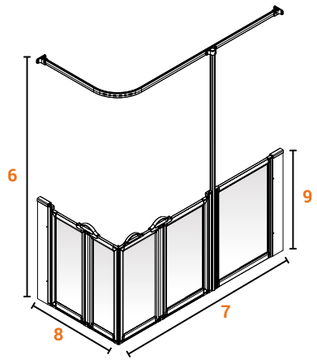

UK CA | CE

Features & Benefits

+ Fixed side panel on '7' and bi-folding doors on '7' and '8', opening in and out
+ Handed
+ Options available for wet floors (XW) and shower trays (X, XF)
+ Full-height (XF) and half-height (X, XW) options available
+ Wet floor option (XW) supplied with special corner blocks designed to be trimmed on site to accommodate any radius to coved slip-resistant flooring

Specifications

L-shaped curtain rail supplied – can be trimmed on site

Handles and latch are included with Option X screens

Standard 1800mm wide x 1800mm drop shower curtains supplied

Silverdale® option available frosted glazing only

WF12

Standard & Silverdale®: Option X, XW, XF

Option X Standard	1	2	3	4	5	6	7	8	9	
									750mm	900mm
X 1200 x 700mm	422mm	369mm	324mm	320mm	365mm	1880mm	1200mm	700mm	**91318L/R**	**91133L/R**
X 1300 x 700mm	522mm	369mm	324mm	320mm	365mm	1880mm	1300mm	700mm	**91389L/R**	**91135L/R**
X 1300 x 800mm	-	-	-	-	-	1880mm	1300mm	800mm	**91421L/R**	**-**
X 1400 x 900mm	-	-	-	-	-	1880mm	1400mm	900mm	**91423L/R**	**-**
X 1420 x 700mm	692mm	366mm	321mm	327mm	282mm	1880mm	1420mm	700mm	**91137L/R**	**91139L/R**
X 1420 x 820mm	692mm	366mm	321mm	387mm	342mm	1880mm	1420mm	820mm	**91138L/R**	**91140L/R**
X 1500 x 700mm	692mm	406mm	361mm	327mm	282mm	1880mm	1500mm	700mm	**91141L/R**	**91143L/R**
XW 1200 x 900mm	422mm	369mm	324mm	427mm	382mm	1880mm	1200mm	900mm	**91392L/R**	**-**
XW 1300 x 800mm	-	-	-	–	–	1880mm	1300mm	800mm	**91425L/R**	**-**
XW 1400 x 900	-	-	-	–	–	1880mm	1400mm	900mm	**91427L/R**	**-**
XW 1300 x 820mm	522mm	391mm	346mm	387mm	342mm	1880mm	1300mm	820mm	**91134L/R**	**91136L/R**
XW 1500 x 820mm	692mm	406mm	361mm	387mm	342mm	1880mm	1500mm	820mm	**91142L/R**	**91144L/R**
XF 1800 x 700mm	800mm	498mm	460mm	323mm	285mm	1880mm	1800mm	700mm	**91339L/R**	**91339L/R**
XF 1800 x 820mm	800mm	498mm	460mm	383mm	345mm	1880mm	1800mm	820mm	**91340L/R**	**91342L/R**
X 1470 x 750mm	742mm	366mm	321mm	327mm	282mm	1880mm	1470mm	750mm	**91280L/R**	**91281R***

Option X Silverdale®	1	2	3	4	5	6	7	8	9
									900mm
X 1420 x 700mm	692mm	366mm	321mm	327mm	282mm	1880mm	1420mm	700mm	**91139LSF/RSF**
XF 1800 x 700mm	800mm	498mm	460mm	323mm	285mm	1880mm	1800mm	700mm	**91339LSF/RSF**
XF 1800 x 820mm	800mm	498mm	460mm	383mm	345mm	1880mm	1800mm	820mm	**91340LSF/RSF**

Y | YF | Y

Standard & Silverdale®: Option Y

Left-handed

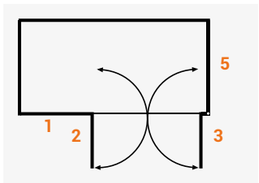

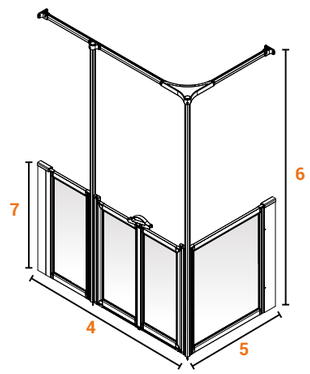

Right-handed

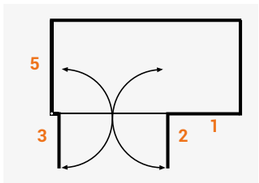

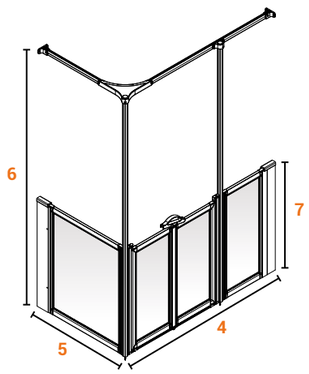

Features & Benefits

- Fixed side panel and bi-parting doors to '4' side
- Fixed side panel to '5' side
- Handed
- Suitable for shower trays
- Full-height (YF) and half-height (Y) options available

Specifications

L-shaped curtain rail supplied

Latch included (additional handles are optional extras)

Standard 1800mm wide x 1800mm drop shower curtains supplied

Standard & Silverdale®: Option Y, YF

Option Y Standard	1	2	3	4	5	6	7	
							750mm	900mm
Y 1300 x 700mm	381mm	437mm	437mm	1300mm	700mm	1880mm	**91145L/R**	**91147L/R**
Y 1300 x 820mm	381mm	437mm	437mm	1300mm	820mm	1880mm	**91146L/R**	**91148L/R**
Y 1420 x 700mm	500mm	437mm	437mm	1420mm	700mm	1880mm	**91149L/R**	**91151L/R**
Y 1420 x 820mm	500mm	437mm	437mm	1420mm	820mm	1880mm	**91150L/R**	**91152L/R**
Y 1700 x 700mm	702mm	477mm	477mm	1700mm	700mm	1880mm	**91153L/R**	**91154L/R**
YF 1800 x 700mm	800mm	469mm	469mm	700mm	1800mm	1880mm	**–**	**91341L/R**
YF 1800 x 820mm	800mm	469mm	469mm	820mm	1800mm	1880mm	**–**	**91342L/R**
Y 1350 x 750mm	431mm	437mm	437mm	1350mm	750mm	1880mm	**91282L/R**	**91283R***
Y 1470 x 750mm	550mm	437mm	437mm	1470mm	750mm	1880mm	**–**	**91285L/R**

Option Y Silverdale®	1	2	3	4	5	6	7
							900mm
Y 1420 x 700mm	500mm	437mm	437mm	700mm	1420mm	1880mm	**91151LSF/RSF**
Y 1700 x 700mm	702mm	477mm	477mm	700mm	1700mm	1880mm	**91154LSF/RSF**

Screens include extra wide compensator

Please note: Compensators are set at mid point giving 14.5mm in and out adjustment on both sides.
Extra wide compensators are not available for Silverdale® screens.

If you require a different size screen, poles or curtain we can accommodate this. Please refer to Made-to-Measure Screens on **page** 188.

L/R in the product code denotes whether the screen is Left or Right handed. *900mm Option Y 1350x750mm is only available right handed.

Z | ZW | ZUW

Standard: Option Z

Left-handed

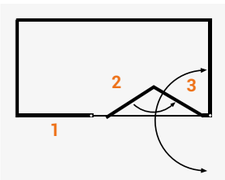

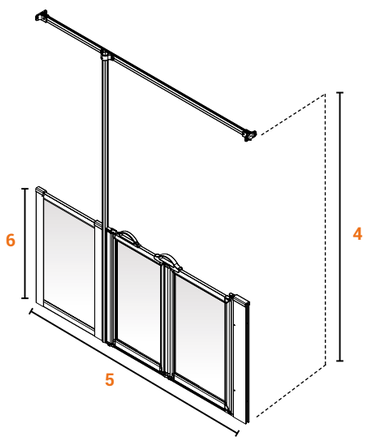

Right-handed

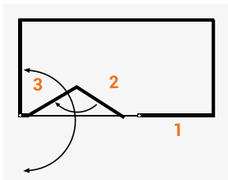

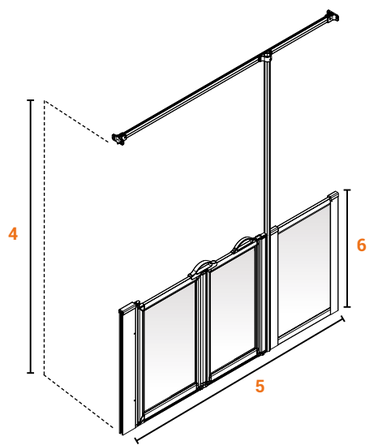

UK CA | CE

Features & Benefits

+ Bi-folding doors '2/3' to give 900mm clear entry path, opening in and out
+ Fixed panel '1' is trimmable on site to suit alcove situations - for (Z) and (ZW) only
+ Handed
+ Options available for wet floors (ZW, ZUW) and shower trays (Z)
+ Wet floor option supplied with special corner blocks designed to be trimmed on site to accommodate any radius to coved slip-resistant flooring curtains supplied

Specifications

Straight curtain rail supplied can be cut to fit

Handle and latch are included with Option Z screens

Standard 1800mm wide x 1800mm drop shower

WF24

Standard: Option Z, ZW, ZUW

Option Z Standard	1*	2	3	4	5**	6	
						750mm	900mm
Z 1800-1500mm	410mm	483mm	518mm	1880mm	1800-1500mm	**91155L/R**	**91156L/R**
ZW 1800mm	810mm	483mm	518mm	1880mm	1500-1800mm	**91187L/R**	**91186L/R**
ZUW 1500mm	500mm	441mm	476mm	1880mm	1500mm	**91372L/R**	**–**
ZUW 1550mm	500mm	466mm	501mm	1880mm	1550mm	**91373L/R**	**–**
ZUW 1800mm	500mm	591mm	626mm	1880mm	1800mm	**91378L/R**	**–**
Z 1850mm	410mm	483mm	518mm	1880mm	1850mm	**91286L/R**	**91287L***

Screens include extra wide compensator

Please note: Compensators are set at mid point giving 14.5mm in and out adjustment on both sides.
Option Z screens can be used with Extra wide compensator on door side only.

***Column 1:** maximum size of trimmable panel.

****Column 5:** measurements account for adjustment (on door side only) with trimmable panel.

L/R in the product code denotes whether the screen is Left or Right handed. *900mm Option Z 1850mm is only available left handed.

Please note: If you require a different size screen, poles or curtain we can accommodate this. Please refer to Made-to-Measure Screens on **page** 188.

Sliding

Our sliding shower screens can be installed with a variety of trays and wet floors, and have specially designed seals to reduce water egress. They are suitable for all AKW trays and wet floors, and are supplied with trimmable corner blocks to accommodate coved, slip-resistant flooring.

+ Space-saving sliding screen solution for tight spaces
+ Front and side overlapping, sliding doors which open in and out
+ PET frosted panels provide shatterproof glazing and added safety
+ A strong magnetic strip increases water retention
+ Lifetime warranty

Sliding Shower Screen Options

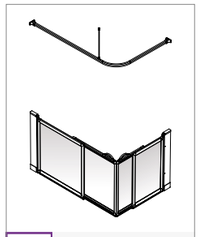

SE Sliding Shower Screen
page 229

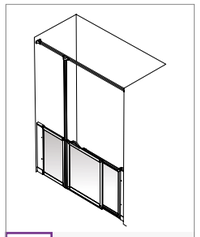

SJ Sliding Shower Screen
page 230

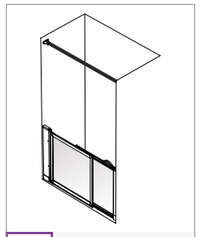

SM Sliding Shower Screen
page 231

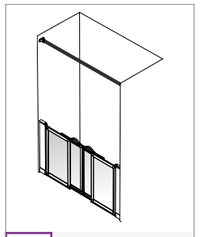

SN Sliding Shower Screen
page 232

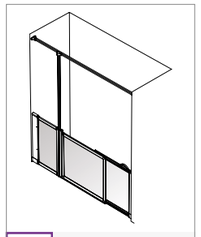

SU Sliding Shower Screen
page 233

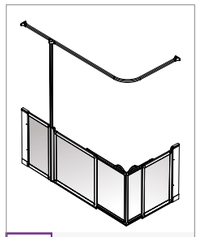

SX Sliding Shower Screen
page 234

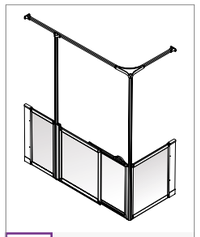

SY Sliding Shower Screen
page 235

SE

Sliding: Option SE

Features & Benefits

+ Handed
+ Suitable for all trays and wet floors

Specifications

L-shaped curtain rail supplied - can be cut to fit

Handles are included

Supplied with 2 x 1800mm x 1800mm curtains

WF5

Left-handed

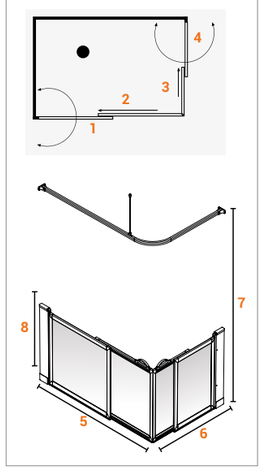

Right-handed

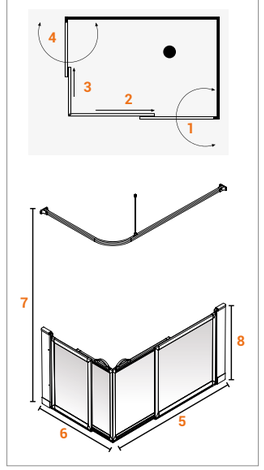

Dimensions, Size Options & Product Codes:

Shower Tray Size Options:	1	2	3	4	5	6	7	8 750mm
900-1000mm x 900-1000mm	558mm	510mm	510mm	558mm	900 – 1000mm	900 – 1000mm	1880mm	**15500**
1200-1300mm x 700-820mm	708mm	660mm	420mm	468mm	1200 – 1300mm	700 – 820mm	1880mm	**15501L/R**
1420-1500mm x 700-820mm	808mm	760mm	420mm	468mm	1420 – 1500mm	700 – 820mm	1880mm	**15502L/R**

Please note: Sliding screen compensators give 14.5mm adjustment inwards and outwards on both sides.

L/R in the product code denotes whether the screen is Left or Right handed.

Please note: If you require a different size screen, poles or curtain we can accommodate this. Please refer to Made-to-Measure Screens on **page** 188.

SJ

Sliding: Option SJ

Features & Benefits

+ Non-handed
+ Suitable for all trays and wet floors

Specifications

L-shaped curtain rail supplied - can be cut to fit

Handles are included

Supplied with 2 x 1800mm x 1800mm curtains

Supplied with an oversized L-shaped curtian rail that can be trimmed down to a straight rail as required

WF27

Left-handed

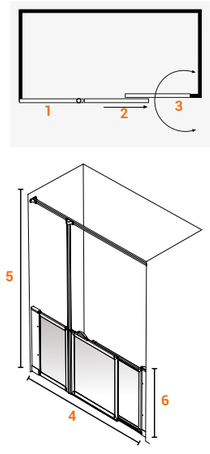

Right-handed

UK CA | CE

Dimensions, Size Options & Product Codes:

Shower Tray Size Options:	1	2	3	4	5	6 750mm
1200-1300mm	450mm	430mm	475mm	1200-1300mm	1880mm	**15506L/R**
1420-1500mm	600mm	455mm	500mm	1420-1500mm	1880mm	**15507L/R**
1700-1800mm*	600mm	622mm	572mm	1700-1800mm	1880mm	**15522L/R**

Model features a straight rail rather than curved

Please note: Sliding screen compensators give 14.5mm adjustment inwards and outwards.
*Straight curtain rail supplied.

L/R in the product code denotes whether the screen is Left or Right handed.

SM

Sliding: Option SM

Features & Benefits

+ Handed
+ Suitable for all trays and wet floors

Specifications

L-shaped curtain rail supplied - can be cut to fit

Handles are included

Supplied with 2 x 1800mm x 1800mm curtains

Supplied with an oversized L-shaped curtian rail that can be trimmed down to a straight rail as required

WF20

Left-handed

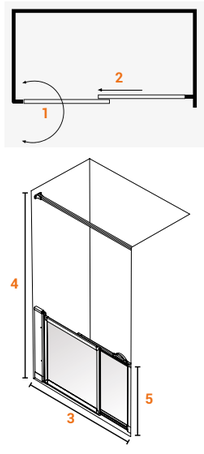

Right-handed

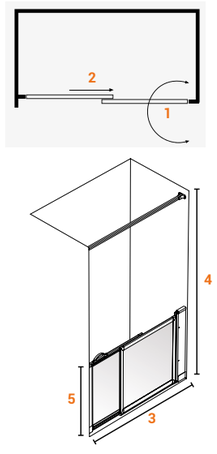

UK CA | CE

Dimensions, Size Options & Product Codes:

Shower Tray Size Options:	1	2	3	4	5 750mm
900-1000mm	538mm	493mm	900-1000mm	1880mm	**15503L/R**
1200-1300mm	688mm	643mm	1200-1300mm	1880mm	**15504L/R**
1420-1500mm	788mm	743mm	1420-1500mm	1880mm	**15505L/R**

Please note: Sliding screen compensators give 14.5mm adjustment inwards and outwards on one side only.

L/R in the product code denotes whether the screen is Left or Right handed.

SN

Sliding: Option SN

Features & Benefits

+ Non-handed
+ Suitable for all trays and wet floors

Specifications

L-shaped curtain rail supplied - can be cut to fit

Handles are included

Supplied with 2 x 1800mm x 1800mm curtains

Supplied with an oversized L-shaped curtian rail that can be trimmed down to a straight rail as required

Non-handed

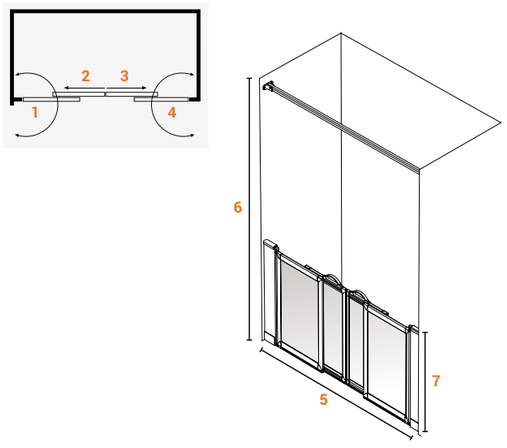

SCREENS

Dimensions, Size Options & Product Codes:

Shower Tray Size Options:	1	2	3	4	5	6	7 750mm
1200-1300mm	402mm	325mm	325mm	402mm	1200-1300mm	1880mm	**15508**
1420-1500mm	452mm	402mm	402mm	452mm	1420-1500 mm	1880mm	**15509**
1700-1800mm*	527mm	477mm	477mm	527mm	1700-1800mm	1880mm	**15510**

Please note: Sliding screen compensators give 14.5mm adjustment inwards and outwards.

*Straight curtain rail supplied.

SU

Sliding: Option SU

Features & Benefits

+ Handed
+ Suitable for all trays and wet floors

Specifications

L-shaped curtain rail supplied - can be cut to fit

Handles are included

Supplied with 2 x 1800mm x 1800mm curtain

Supplied with an oversized L-shaped curtian rail that can be trimmed down to a straight rail as required

Left-handed

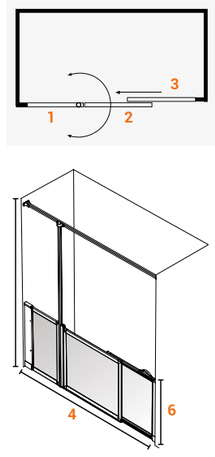

Right-handed

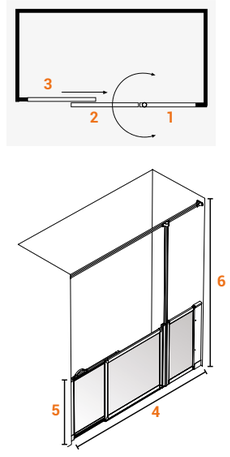

SCREENS

Dimensions, Size Options & Product Codes:

Shower Tray Size Options:	1	2	3	4	5	6 750mm
1135-1300mm	450mm	500mm	455mm	1135-1300mm	1880mm	**15511L/R**
1420-1500mm	600mm	525mm	480mm	1420-1500mm	1880mm	**15512L/R**
1700-1800mm*	800mm	575mm	528mm	1700-1800mm	1880mm	**15513L/R**

Please note: Compensators are set at mid point giving 14.5mm in and out adjustment on door hinge side only.

*Straight curtain rail supplied.

L/R in the product code denotes whether the screen is Left or Right handed.

SX

Sliding: Option SX

Features & Benefits

+ Handed
+ Suitable for all trays and wet floors
+ Supplied with special corner blocks designed to be trimmed on site to accommodate any radius to coved slip-resistant flooring

Specifications

L-shaped curtain rail supplied - can be cut to fit

Handles are included

Supplied with 2 x 1800mm x 1800mm curtains

Left-handed

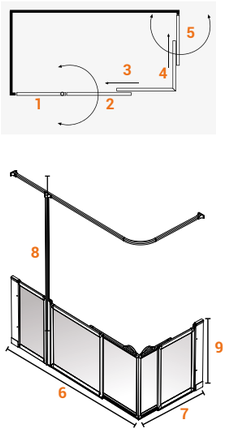

Right-handed

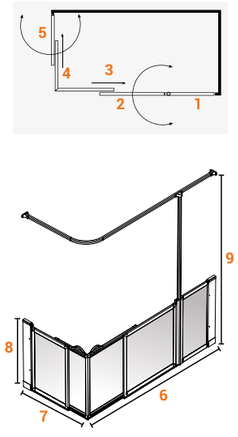

Dimensions, Size Options & Product Codes:

Shower Tray Size Options:	1	2	3	4	5	6	7	8	9 750mm
1200-1300mm	450mm	513mm	465mm	420mm	468mm	1200-1300mm	700-820mm	1880mm	**15514L/R**
1420-1500mm	600mm	538mm	490mm	420mm	468mm	1420 – 1500mm	700-820mm	1880mm	**15515L/R**
1700-1800mm	800mm	581mm	543mm	420mm	468mm	1700 – 1800mm	700-820mm	1880mm	**15516L/R**

Please note: Sliding screen compensators give 14.5mm adjustment inwards and outwards.

L/R in the product code denotes whether the screen is Left or Right handed.

SY

Sliding: Option SY

Features & Benefits

+ Handed
+ Suitable for all trays and wet floors
+ Supplied with special corner blocks designed to be trimmed on site to accommodate any radius to coved slip-resistant flooring

Specifications

L-shaped curtain rail supplied - can be cut to fit

Handles are included

Supplied with 2 x 1800mm x 1800mm curtains

Left-handed

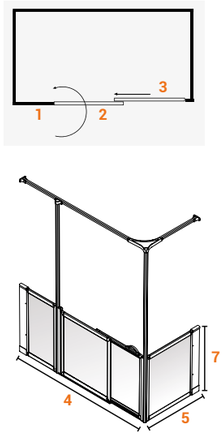

Right-handed

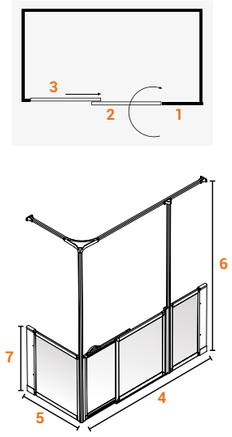

Dimensions, Size Options & Product Codes:

Shower Tray Size Options:	1	2	3	4	5	6	7 750mm
1200-1300mm x 700mm	450mm	500mm	455mm	1200-1300mm	700mm	1880mm	**15517L/R**
1200-1300mm x 820mm	450mm	500mm	455mm	1200-1300mm	820mm	1880mm	**15518L/R**
1420-1500mm x 700mm	600mm	525mm	481mm	1420-1500mm	700mm	1880mm	**15519L/R**
1420-1500mm x 820mm	600mm	525mm	481mm	1420-1500mm	820mm	1880mm	**15520L/R**

Please note: Sliding screen compensators give 14.5mm adjustment inwards and outwards.

L/R in the product code denotes whether the screen is Left or Right handed.

Freeway Portable Shower Screens

At 750mm and 900mm high, Freeway screens are ideal for use as a splash protector and can be used on designated trays or wet floors.

Features & Benefits

- Portable
- Suitable for shower trays and wet floors
- D-handles fitted as standard for ease of lifting and placement
- Weight is between 10-13kg
- Two, three and four panelled versions available

Portable
Two Panels

Portable
Three Panels

Portable
Four Panels

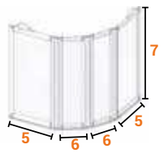

Dimensions, Size Options & Product Codes:

Shower Screen Size Options:	1	2	3	4	5	6	Product Code 750mm	Product Code 900mm
Two Panels: 650 x 650mm	650mm	650mm	–	–	–	–	**15166**	**15342**
Two Panels: 750 x 750mm	750mm	750mm	–	–	–	–	**15165**	**15343**
Two Panels: 1000 x 1000mm	1000mm	1000mm	–	–	–	–	**15137**	**15344**
Three Panels: 350 x 700mm	–	–	350mm	700mm	–	–	**15136**	**15301**
Four Panels: 400 x 225mm	–	–	–	–	400mm	225mm	**15135**	**15345**

Curtain Rails: Straight

Product Codes

1900mm Straight Curtain Rail	**24018**
1900mm Straight Curtain Rail – Grey	**24018G**
2135mm Straight Curtain Rail	**24049**
Made-to-Measure Straight Curtain Rail (up to 3180mm)	**27202S**
2530mm Silverdale® Straight Curtain Rail	**24067-S**

Curtain Rails: Bendy

Product Codes

2000mm Bendy Curtain Rail	**24033**
2000mm Bendy Curtain Rail and 2 Drop Rods	**24033DR**
2500mm Bendy Curtain Rail	**24034**
2500mm Bendy Curtain Rail and 2 Drop Rods	**24034DR**
3000mm Bendy Curtain Rail	**24044**
3000mm Bendy Curtain Rail and 2 Drop Rods	**24044DR**

Curtain Rails: L-Shaped

Product Codes

1000 x 1000mm L-Shaped Curtain Rail	**24043**
1500 x 1200mm L-Shaped Curtain Rail	**24126**
1800 x 820mm L-Shaped Curtain Rail	**24039**
2000 x 1000mm L-Shaped Curtain Rail	**24048**
1800 x 820mm L-Shaped Curtain Rail (to fit Silverdale® Screen)	**24039-S**
1800x820mm L Shaped Curtain Rail – Grey	**24039G**
1000x1000mm L Shaped Curtain Rail - Grey	**24043G**
1500x1200mm L Shaped Curtain Rail - Grey	**24126G**
Made-to-Msre L-Shaped Curtain Rail (up to 2530mm)	**27202LS**
Made-to-Msre L-Shaped Curtain Rail (2530-3180mm)	**27202LM**
Made-to-Msre L-Shaped Curtain Rail (3180-3550mm)	**27202LL**
Curtain rail to pole - Grey	**15-006-791X1**
Curtain Rail Corner to Pole Grey	**15-006-792**

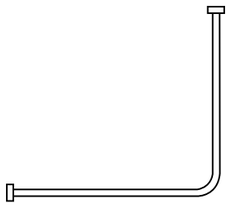

Curtain Rails: U-Shaped

Features & Benefits

+ U-shaped curtain rail
+ Can be made-to-measure (3600mm max) – specify your chosen tray and screen combination when ordering
+ Can be cut-to-length to suit installation
+ Includes two upright support posts (necessary for structural stability)
+ All curtain rails include two packs of hooks and gliders. Shower curtains are not included and should be ordered separately.

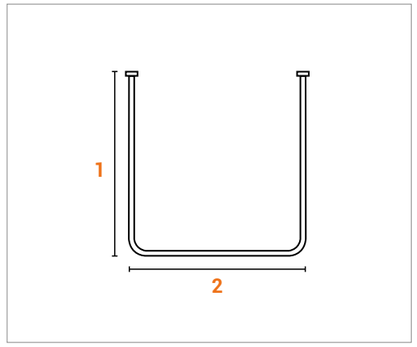

Shower Tray Size Options:	1	2	Code:
900 x 900mm	900mm	820mm	**24219**
1000 x 700mm	720mm	920mm	**24002**
1000 x 1000mm	1000mm	920mm	**24217**
1050 x 1050mm	1050mm	970mm	**24010**
1135 x 770mm	770mm	1050mm	**24220**
1200 x 820mm	810mm	1120mm	**24045**
1200 x 1200mm	1200mm	1120mm	**24009**
1250 x 750mm	750mm	1170mm	**24017**
1300 x 700mm	700mm	1300mm	**24027**
1300 x 820mm	820mm	1220mm	**24095**
1350 x 750mm	750mm	1270mm	**24218**
1420 x 820mm	820mm	1340mm	**24091**
1470 x 750mm	750mm	1390mm	**24014**
1500 x 820mm	820mm	1420mm	**24047**
1500 x 900mm	1500mm	820mm	**24068***
1700 x 700mm	700mm	1620mm	**24046**
1800 x 820mm	820mm	1720mm	**24026**
1850 x 750mm	750mm	1770mm	**24021**

Made-to-Measure U-Shaped Curtain Rail (up to 2530mm)	**27202US**
Made-to-Measure U-Shaped Curtain Rail (2530-3180mm)	**27202UM**
Made-to-Measure U-Shaped Curtain Rail (3180-3550mm)	**27202UL**
Made-to-Measure Silverdale® U-shaped curtain rail (up to 2530mm)	**27202-US-S**

* Also available as rail only

Drop Rods

Product Codes

Standard Drop Rod (600mm)	**drop.rod**
Extra Long Drop Rod (2000mm)	**BEL131**
Single Curtain Rail Support Kit	**ACRS1.Kit**
Double Curtain Rail Support Kit	**ACRS2.Kit**
Silverdale® Drop Rod	**07-002-543**

Window Spanning Kit

Features & Benefits

+ Robust, easy to fit and trimmable
+ Kit includes special wall bracket, hooks and gliders and a single curtain (1400mm long)

Product Codes

Window Spanning Kit (Standard)	**24210**
Window Spanning Kit (Silverdale®)	**24210S**
Additional Wall-Fixing Brackets (Standard)	**24213**
Additional Wall-Fixing Brackets (Silverdale®)	**24213S**

32mm Diameter Upright Pole Extension Kit

Features & Benefits

+ Designed to give additional strength and rigidity to any screen options with a post
+ 950mm length (can be cut to length as required)

Product Codes

Upright Pole Extension Kit (Standard)	**24212**
Upright Pole Extension Kit (Silverdale®)	**24212S**

32mm Diameter Back Support Pole

Features & Benefits

+ Suitable for vertical poles where upright support posts may need additional support
+ 950mm length (can be cut to suit tray width)

Product Codes

Back Support Pole (Standard)	**24211**
Back Support Pole (Silverdale®)	**24211S**

Extra Wide Compensator

Features & Benefits

+ Designed to give approximately 50mm additional width to a standard shower screen enclosure area. Also for use with a pipe duct kit or where pipes have been boxed in.
+ 105mm width

Specifications

50mm additional width with +/- 14.5mm in and out
to achieve extra 35.5mm (min) – 64.5mm (max)

Product Codes

Size	Wet Floor	Standard
750mm (Non-Handed)	**24139**	**24130**
750mm (Left)*	**24140**	**24131**
750mm (Right)*	**24141**	**24132**
900mm (Non-Handed)	**24142**	**24133**
900mm (Left)*	**24143**	**24134**
900mm (Right)*	**24144**	**24135**
1870mm (Non-Handed)	**24145**	**24136**
1870mm (Left)*	**24146**	**24137**
1870mm (Right)*	**24147**	**24138**

i Not for use with Silverdale® screens

i Supplied as standard with screens for 760mm wide trays

Shower Curtain Clip

Features & Benefits

+ Simple hinge clip design, easily clips to the edge of the curtain to lock, and unclips to release
+ Tight grip – particularly beneficial in high use shower areas where the water escaping the shower area often builds up quicker than it can dry
+ Easy-release clasp
+ Self-adhesive fitting strip and fixing points if required

Product Code

AKW Shower Curtain Clip 2m	**30084**

Standard Shower Curtain

Features & Benefits

+ 1800 x 1800mm weighted curtains are supplied as standard with all enclosures
+ Curtain material: 100% woven polyester
+ Sizes shown below are width x drop
+ All individual curtains include two packs of hooks and gliders

Plain White Curtains

Product Codes

900 x 2000mm Drop Shower Curtain	**24074**
1800 x 1400mm Drop Shower Curtain	**24075**
1800 x 1800mm Drop Shower Curtain	**24076**
1800 x 1850mm Drop Shower Curtain	**24088**
1800 x 1900mm Drop Shower Curtain	**24077**
1800 x 2000mm Drop Shower Curtain	**24078**
1800 x 2100mm Drop Shower Curtain	**24079**
1800 x 2400mm Drop Shower Curtain	**24080**
2135 x 2135mm Drop Shower Curtain	**24073**
2000 x 2000mm Drop Antibacterial Shower Curtain	**24072AB**
2400 x 1800mm Drop Shower Curtain	**24086**
Additional Hooks and Gliders (11 Pack)	**24092**

Heavy Duty Shower Curtain

Heavy duty shower curtains have the added benefit of being weighted and made from denser material to prevent the curtain billowing.

Features & Benefits

+ Curtain material: 100% woven polyester
+ Sizes shown below are width x drop
+ Plain white

Product Codes

1800 x 2000mm Heavy Duty Shower Curtain	**24082**
2400 x 2000mm Heavy Duty Shower Curtain	**24083**
2400 x 1800mm Heavy Duty Shower Curtain	**24084**
1800 x 1800mm Heavy Duty Shower Curtain	**24085**

Handles

Features & Benefits

+ Supplied as standard on most corner bi-parting doors but can be supplied on other doors if required
+ Also available in blue (RAL5005) for the partially sighted and in grey (RAL7035) for Silverdale® screens

Product Codes

White D-Handle (Grey capped screens)	**24105WH**
Blue D-Handle (Grey capped screens)	**24105BU**
Grey D-Handle (Silverdale® screens)	**24105S**

Door Latches

Features & Benefits

+ Supplied as standard on all bi-fold and bi-parting doors but can be supplied on other doors if required
+ Also available in blue (RAL5005) for the partially sighted and in grey (RAL7035) for Silverdale® screens

Product Codes

White D-Latch (Grey capped screens)	**24106WH**
Blue D-Latch (Grey capped screens)	**24106BU**
Grey D-Latch (Silverdale® screens)	**24106S**

Shower Cubicles

Replace your bath with a convenient shower cubicle; AKW has a wide variety of cubicles designed to provide future-proof, stylish solutions.

+ Secure and accessible shower area
+ Stability, freestanding cubicles
+ Contemporary design options with a choice of doors for different mobilities
+ Quick and easy installation
+ A range of optional extras available to complete your cubicle
+ Variety of easy-care glass or PET screens
+ Low and level-access options

Onyx Care Pod

Developed alongside local authorities, housing associations, occupational therapists and contractors, the Onyx Care Pod is a stylish yet highly functional standalone cubicle, designed to offer both short-term and future-proofed showering solutions for those who need it most.

One of the many fantastic benefits of the Onyx Care Pod is that cubicle installation is possible within just two hours where water, waste and power are provided. This allows for a full adaptation to be completed within two days, vastly reducing inconvenience and fulfilling the needs of the end user much faster.

Features & Benefits

+ Safe and accessible with fully recessed or low-level entry
+ Standalone cubicle that can be installed throughout the home
+ Contemporary design which positively contributes to user well-being
+ Quick and easy installation
+ 100% waterproof
+ Future-proofed showering and toileting solution
+ Larenco duo door - AKW Duolinx magnetic locking handle
+ Supports a number of mobility aids and accessories
+ 26mm deep, textured shower tray offers a high level of slip resistance, and can be recessed for easier access
+ Lifetime guarantee

Half height carer screen

Full height carer screen

OT Benefits

Falls risk reduction

+ The Onyx Exclusif shower tray is our shallowest yet at only 26mm which significantly reduces the threshold for an ambulant user.
+ The Onyx Exclusif shower tray boasts a higher slip-resistance rating than other surface-mounted trays, whilst caring for the client's skin with a textured finish.
+ High-quality, AKW Larenco 6mm toughened glass, or durable PET glazing is available for added user safety.
+ Grab rails and load-bearing riser rail offer stability and support for the user inside the cubicle

Client-centred & holistic

+ The Onyx Exclusif shower tray can be recessed to provide level entry, alternatively a ramp can be supplied.
+ Shower controls can be positioned for easy use to maximise independence.
+ Grab rails can be installed within the Onyx Care Pod to ensure LRV colour contrast for clients with visual impairment. The mid-grey grab rails from our dementia-friendly range also reinforce the importance of aesthetics for long-term health and well-being.
+ The wall panels are structural and allow shower seats and grab rails to be fixed directly, either during or post installation, at a user-specific height.
+ With our duo door option, the Duolinx magnetic locking handle system allows the user or carer flexibility over opening/closing one or both screens, minimising moving and handling manoeuvres and maximising dignity.
+ Optional half-height, bi-folding PET screen enables complete access to the cubicle, with shower curtain maximising client dignity
+ Showerloo option is also available for those with additional toileting requirements, which reduces moving and handling, and is particularly beneficial when the Onyx Care Pod is installed outside of a bathroom environment

DFG suitable

+ Extremely competitive pricing makes DFG a realistic funding option for the Onyx Care Pod.
+ Vastly reduced installation time – maximum two days, compared to traditional 5-7-day adaptation. This reduces labour costs as well as costs associated with respite or alternative accommodation whilst works take place.
+ The lifetime guarantee enables budget holders to approve installation with confidence.
+ Future-proofed solution - the recessed Onyx shower tray provides level access, the care accessories used meet the required LRV for visual impairment, and the duo doors allow carer-assisted bathing, providing a long-term solution which considers the user's future requirements.

Infection control

+ Wall panels harbour less bacteria than grouted tiles, lowering maintenance for the client or their carers, enabling them more time and energy to engage in meaningful activities.
+ Wall panels are a great solution for clients with smearing tendencies.
+ Reduced installation time minimises client and contractor contact with associated virus and infection risk reduction.

End User Benefits

- We understand the anxiety about **falls** and the Onyx Care Pod is designed to **reduce this risk** so that the client can remain confident (or indeed regain confidence) and **engage in meaningful activity**.
- The Onyx Exclusif shower tray is our shallowest yet, only 26mm, meaning a lower threshold and **reduced tripping hazards**.
- **Grab rails and seats** can be installed at any time, directly to the structural wall panels at a position and height that suits you.
- Toughened glass offers **increased safety** without compromising on visibility or aesthetics.
- **It looks great!** We understand that adaptations should be in keeping with the home and do not need to reinforce perceived disability. An adaptation that does not look nice can have a long-term impact on health and well-being, so we have made sure the Onyx Care Pod looks good whilst facilitating safety and independence.
- The lifetime guarantee gives you absolute **peace of mind**.
- **Quick installation** means less upheaval and stress, as well as reducing infection risks.
- **Easy to clean** with warm soapy water.
- Care accessories **reduce risks** whilst maximising your independence and dignity.

ONYX
CARE POD

LIFETIME WARRANTY

The Onyx Care Pod and all AKW shower trays, AKW shower screens and AKW shower seats come with a lifetime warranty against manufacturing defects*.

*The lifetime warranty excludes normal wear and tear in general domestic applications. It applies only to products being installed for the first time and according to relevant local and national regulations.

5 YEAR WARRANTY

As standard

AKW SmartCare Plus Electric Shower comes with a 5 year warranty as standard*.

*Product must be registered within 30 days with AKW Medi-Care Limited or your guarantee will default to 12 months.

3 YEAR WARRANTY

As standard

AKW Arka® Thermostatic Mixer Shower comes with a 3 year warranty as standard with extended warranties available*.

Please refer to our terms and conditions in the AKW catalogue for further information.

*2 year extended warranty option available.

5 YEAR WARRANTY

AKW electrical items come with a 5-year warranty against manufacturing defects*.

Other branded electrical products carry the warranty of the manufacturer.

*Excluding extractor fans which carry 3 year warranty.

Full Height Carer Screen Dimensions

Alcove Duo
Figure 1

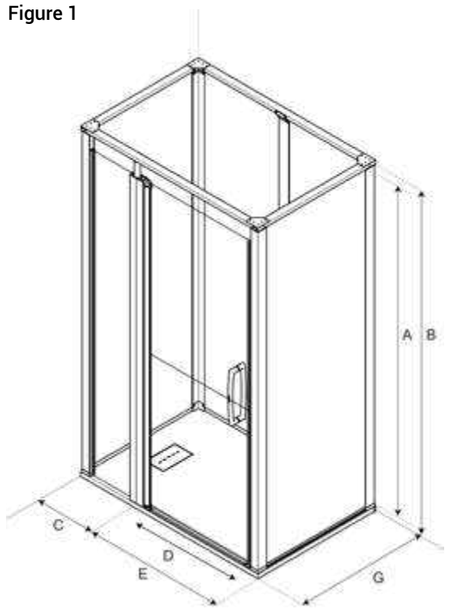

Alcove Duo
Figure 2

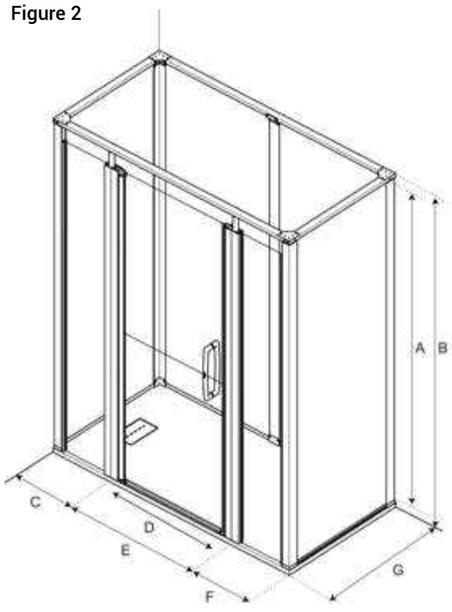

Corner Duo
Figure 3

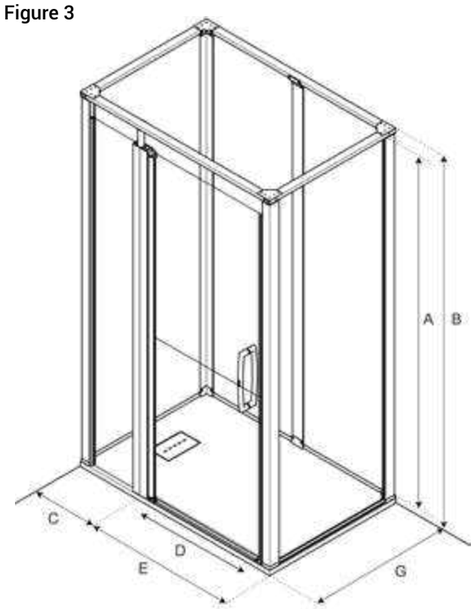

Corner Duo
Figure 4

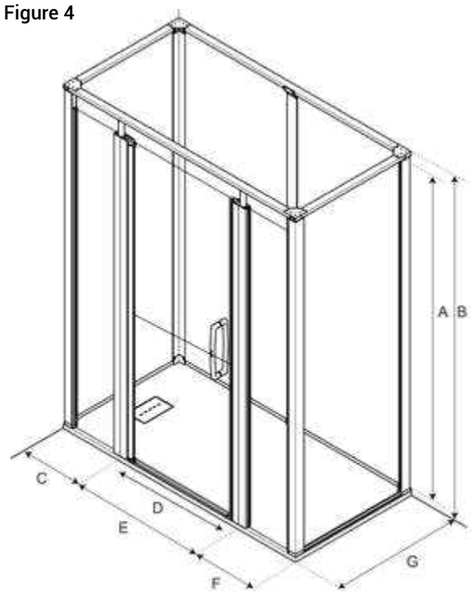

Type	A	B	C	D	E	F	G	H
(Alcove Duo) – Fig 1								
1200 x 800mm	2003	2051	400	725	800	–	800	1900
1200 x 900mm	2003	2051	400	725	800	–	900	1900
1400 x 800mm	2003	2051	400	925	1000	–	800	1900
1400 x 900mm	2003	2051	400	925	1000	–	900	1900
(Alcove Duo) – Fig 2								
1600 x 800mm	2003	2051	400	725	800	400	800	1900
1600 x 900mm	2003	2051	400	725	800	400	900	1900
1700 x 800mm	2003	2051	400	825	900	400	800	1900
1700 x 900mm	2003	2051	400	825	900	400	900	1900
(Corner Duo) – Fig 3								
1200 x 800mm	2003	2051	400	725	800	–	800	1900
1200 x 900mm	2003	2051	400	725	800	–	900	1900
1400 x 800mm	2003	2051	400	925	1000	–	800	1900
1400 x 900mm	2003	2051	400	925	1000	–	900	1900
(Corner Duo) – Fig 4								
1600 x 800mm	2003	2051	400	725	800	400	800	1900
1600 x 900mm	2003	2051	400	725	800	400	900	1900
1700 x 800mm	2003	2051	400	825	900	400	800	1900
1700 x 900mm	2003	2051	400	825	900	400	900	1900

Screen doors are non-handed and can be hung either side.
Dimensions above are in mm

A = Panel height
B = Overall height
C = Left inline panel
D = Entrance width
E = Door width
F = Right inline panel
G = Depth
H = Door height

Half Height Carer Screen Dimensions

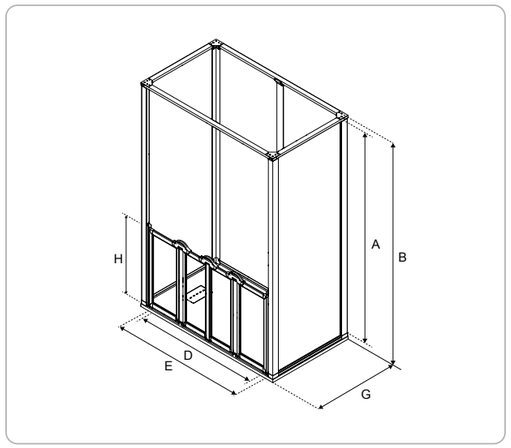

Alcove / Corner Option N (Fig 5)

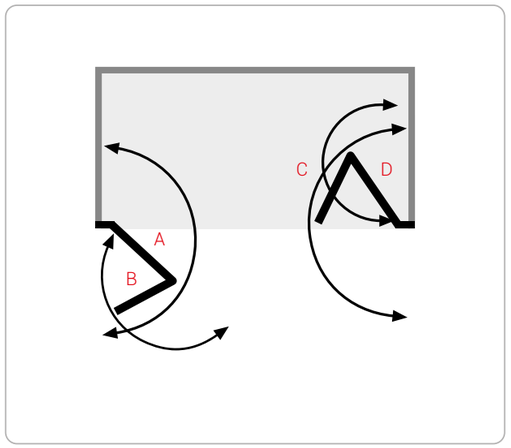

Alcove / Corner Option N Door (Fig 6)

Type	A	B	C	D	E	F	G	H
Alcove / Corner Option N (Fig 5)								
1200 x 800mm	2003	2051	–	1100	1200	–	800	750/900
1200 x 900mm	2003	2051	–	1100	1200	–	900	750/900
1400 x 800mm	2003	2051	–	1300	1400	–	800	750/900
1400 x 900mm	2003	2051	–	1300	1400	–	900	750/900
1600 x 800mm	2003	2051	–	1500	1600	–	800	750/900
1600 x 900mm	2003	2051	–	1500	1600	–	900	750/900
1700 x 800mm	2003	2051	–	1600	1700	–	800	750/900
1700 x 900mm	2003	2051	–	1600	1700	–	900	750/900

Type	A	B	C	D
Alcove / Corner Option N Door (Fig 6)				
1200 x 800mm	292	257	257	292
1200 x 900mm	292	257	257	292
1400 x 800mm	347	312	312	347
1400 x 900mm	347	312	312	347
1600 x 800mm	392	357	357	392
1600 x 900mm	392	357	357	392
1700 x 800mm	417	382	382	417
1700 x 900mm	417	382	382	417

Screen doors are non-handed and can be hung either side
Dimensions above are in mm.

Selection 1 - 9

Option	Selection 1 – Screen options
A	Half Height 750mm
B	Half Height 900mm
C	Full Height DUO
Option	**Selection 2 – Length**
A	1200mm
B	1400mm
C	1600mm
D	1700mm
Option	**Selection 3 – Width**
A	800mm
B	900mm
Option	**Selection 4 – Enclosure type**
A	Alcove
B	Corner
Option	**Selection 5 – Handing (external view)**
A	Right hand (waste on the right)
B	Left hand (waste on the left)
Option	**Selection 6 – Shower options**
A	Arka thermostatic care mixer valve
B	9.5kw SmartCare Plus BEAB Care approved electric shower
Option	**Selection 7 – Waste options**
A	Gravity waste
B	Pumped waste with pump
Option	**Selection 8 – Sanitaryware options**
A	Raised-height sanitaryware pack including brassware
B	Standard-height sanitaryware pack including brassware
C	Showerloo pack – wall hung toilet pan kit
D	No sanitaryware required
Option	**Selection 9 – Additional care products that come as a standard with all Care Pods**
A	Mid-grey steel grab rail (450mm) x 2
	2000 series mid-grey, fold-up padded shower seat with height adjustable leg kit
	Moisture-resistant LED light – 18W

SCREENS

Onyx Care Pod Rubber Threshold Ramps

Available to purchase alongside Onyx Exclusif shower trays and the Onyx Care Pod, our range of versatile rubber threshold ramps have been designed to enable users with limited mobility to navigate the shallow 26mm step when installed above the floor.

Features & Benefits

- Non-slip, ridged surface
- Suitable for use with wheelchairs
- Removable, ideal for multi-user environments
- 1:10 gradient
- Made from high-quality 100% recycled rubber
- Available in 8 different heights
- 78st / 500kg loading capacity
- Width: 1m
- Width can be trimmed down to size
- Can be installed retrospectively
- Available in black

Product Codes

4mm Rubber Threshold Ramp	**25080**
6mm Rubber Threshold Ramp	**25081**
8mm Rubber Threshold Ramp	**25082**
10mm Rubber Threshold Ramp	**25083**
12mm Rubber Threshold Ramp	**25084**
16mm Rubber Threshold Ramp	**25085**
20mm Rubber Threshold Ramp	**25086**
24mm Rubber Threshold Ramp	**25087**

4mm Rubber Threshold Ramp

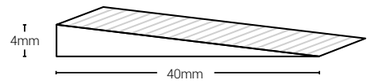

6mm Rubber Threshold Ramp

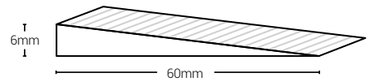

8mm Rubber Threshold Ramp

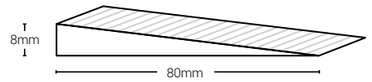

10mm Rubber Threshold Ramp

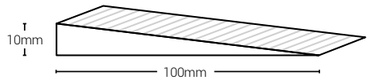

12mm Rubber Threshold Ramp

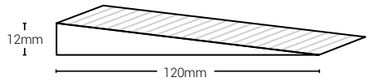

16mm Rubber Threshold Ramp

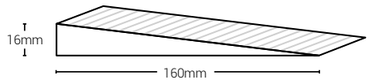

20mm Rubber Threshold Ramp

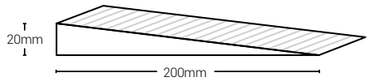

24mm Rubber Threshold Ramp

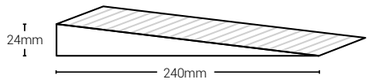

Onyx Shower Cubicle: Sliding Door

Quick and easy to install with much less preparation and decorative work required, Onyx Shower Cubicles are an ideal adaptation solution.

Features & Benefits

- Standalone shower cubicle with Larenco sliding door for a stylish temporary solution
- Alcove and corner configurations available to suit requirements
- Low-level (26mm) anti-slip Onyx shower tray with textured slate effect
- 6mm glass with Stay Clear coating for safety and easy cleaning
- 100% waterproof panels available in white ensures peace of mind
- Optional extras (grab rails, seats and showers) available to complete your cubicle

Aluminium profiles

Four lengths available, from 1200-1700mm

Two widths available, 800mm and 900mm

2m height

300mm filler panel included

Waste not included

Product Codes

Alcove 1200x800mm	**1280SLLAWH/1280SLRAWH**
Alcove 1200x900mm	**1290SLLAWH/1290SLRAWH**
Alcove 1400x800mm	**1480SLLAWH/1480SLRAWH**
Alcove 1400x900mm	**1480SLLAWH/1480SLRAWH**
Alcove 1600x800mm	**1490SLLAWH/1490SLRAWH**
Alcove 1600x900mm	**1690SLLAWH/1690SLRAWH**
Alcove 1700x800mm	**1780SLLAWH/1780SLRAWH**
Alcove 1700x900mm	**1790SLLAWH/1790SLRAWH**
Corner 1200x800mm	**1280SLLCWH/1280SLRCWH**
Corner 1200x900mm	**1290SLLCWH/1290SLRCWH**
Corner 1400x800mm	**1480SLLCWH/1480SLRCWH**
Corner 1400x900mm	**1490SLLCWH/1490SLRCWH**
Corner 1600x800mm	**1680SLLCWH/1680SLRCWH**
Corner 1600x900mm	**1690SLLCWH/1690SLRCWH**
Corner 1700x800mm	**1780SLLCWH/1780SLRCWH**
Corner 1700x900mm	**1790SLLCWH/1790SLRCWH**

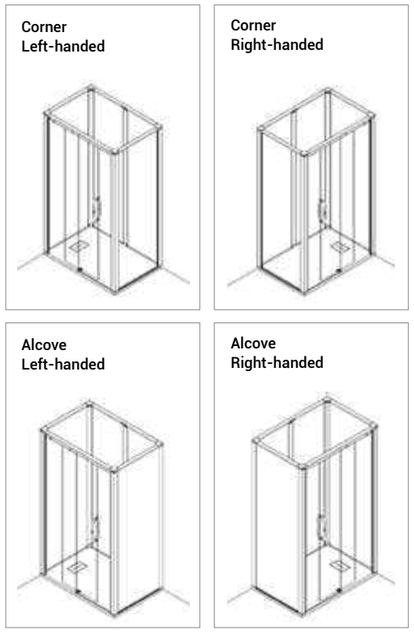

LIFETIME WARRANTY

Compatible with AKW Digipumps on **page** 140

L/R in the product code denotes whether the screen is Left or Right handed.

Onyx Shower Cubicle: Classic

Features & Benefits

- Standalone shower cubicle with Larenco classic glass screens for a stylish temporary solution
- Alcove and corner configurations available to suit requirements
- Low-level (26mm) anti-slip Onyx shower tray with textured slate effect
- 6mm glass with Stay Clear coating for safety and easy cleaning
- 100% waterproof panels available in white ensures peace of mind
- Optional extras (grab rails, seats and showers) available to complete your cubicle

Aluminium profiles

Three lengths available, from 1400-1700mm

Two widths available, 800 and 900mm

2m height

300mm filler panel included

Waste not included

Product Codes

Alcove 1200x800mm	**1280CDLAWH/1280CDRAWH**
Alcove 1200x900mm	**1290CDLAWH/1290CDRAWH**
Alcove 1400x800mm	**1480CDLAWH/1480CDRAWH**
Alcove 1400x900mm	**1490CDLAWH/1490CDRAWH**
Alcove 1600x800mm	**1680CDLAWH/1680CDRAWH**
Alcove 1600x900mm	**1690CDLAWH/1690CDLRWH**
Alcove 1700x800mm	**1780CDLAWH/1780CDRAWH**
Alcove 1700x900mm	**1790CDLAWH/1790CDRAWH**
Corner 1200x800mm	**1280CDLCWH/1280CDRCWH**
Corner 1200x900mm	**1290CDLCWH/1290CDRCWH**
Corner 1400x800mm	**1480CDLCWH/1480CDRCWH**
Corner 1400x900mm	**1490CDLCWH/1490CDRCWH**
Corner 1600x800mm	**1680CDLCWH/1680CDRCWH**
Corner 1600x900mm	**1690CDLCWH/1690CDRCWH**
Corner 1700x800mm	**1780CDLCWH/1780CDRCWH**
Corner 1700x900mm	**1790CDLCWH/1790CDRCWH**

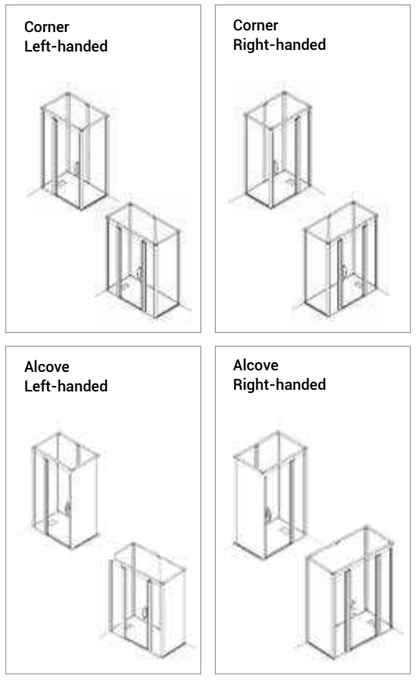

LIFETIME WARRANTY

Compatible with AKW Digipumps on **page** 140

L/R in the product code denotes whether the screen is Left or Right handed.

SCREENS

Onyx Shower Cubicle: Saloon

Features & Benefits

- Standalone shower cubicle with Larenco saloon glass screens for a stylish temporary solution
- Alcove and corner configurations available to suit requirements
- Low-level (26mm) anti-slip Onyx shower tray with textured slate effect
- 6mm glass with Stay Clear coating for safety and easy cleaning
- 100% waterproof panels available in white ensures peace of mind
- Optional extras (grab rails, seats and showers) available to complete your cubicle

Aluminium Profiles

Four lengths available, from 1200-1700mm
Two widths available, 800mm and 900mm
2m height
300mm filler panel included
Waste not included

Product Codes

Alcove 1200x800mm	**1280SDLAWH/1280SDRAWH**
Alcove 1200x900mm	**1290SDLAWH/1290SDRAWH**
Alcove 1400x800mm	**1480SDLAWH/1480SDRAWH**
Alcove 1400x900mm	**1490SDLAWH/1490SDRAWH**
Alcove 1600x800mm	**1680SDLAWH/1680SDRAWH**
Alcove 1600x900mm	**1690SDLAWH/1690SDRAWH**
Alcove 1700x800mm	**1780SDLAWH/1780SDRAWH**
Alcove 1700x900mm	**1790SDLAWH/1790SDRAWH**
Corner 1200x800mm	**1280SDLCWH/1280SDRCWH**
Corner 1200x900mm	**1290SDLCWH/1290SDRCWH**
Corner 1400x800mm	**1480SDLCWH/1480SDRCWH**
Corner 1400x900mm	**1490SDLCWH/1490SDRCWH**
Corner 1600x800mm	**1680SDLCWH/1680SDRCWH**
Corner 1600x900mm	**1690SDLCWH/1690SDRCWH**
Corner 1700x800mm	**1780SDLCWH/1780SDRCWH**
Corner 1700x900mm	**1790SDLCWH/1790SDRCWH**

Corner Left-handed

Corner Right-handed

Alcove Left-handed

Alcove Right-handed

LIFETIME WARRANTY

Compatible with AKW Digipumps on **page** 140

L/R in the product code denotes whether the screen is Left or Right handed.

Onyx Shower Cubicle: Level Best

Features & Benefits

- Standalone shower cubicle with Level Best glass screen for a stylish temporary solution
- Alcove and corner configurations available to suit requirements
- Low-level (26mm) anti-slip Onyx shower tray with textured slate effect
- 6mm glass with Stay Clear coating for safety and easy cleaning
- 100% waterproof panels available in white ensures peace of mind
- Optional extras (grab rails, seats and showers) available to complete your cubicle

Aluminium profiles

Three lengths available, from 1400-1700mm
Two widths available, 800 and 900mm
2m height
300mm filler panel included
Waste not included

Product Codes

Alcove 1400x800mm	**1480LBLAWH/1480LBRAWH**
Alcove 1400x900mm	**1490LBLAWH/1490LBRAWH**
Alcove 1600x800mm	**1680LBLAWH/1680LBRAWH**
Alcove 1600x900mm	**1690LBLAWH/1690LBRAWH**
Alcove 1700x800mm	**1780LBLAWH/1780LBRAWH**
Alcove 1700x900mm	**1790LBLAWH/1790LBRAWH**
Corner 1400x800mm	**1480LBLCWH/1480LBRCWH**
Corner 1400x900mm	**1490LBLCWH/1490LBRCWH**
Corner 1600x800mm	**1680LBLCWH/1680LBRCWH**
Corner 1600x900mm	**1690LBLCWH/1690LBRCWH**
Corner 1700x800mm	**1780LBLCWH/1780LBRCWH**
Corner 1700x900mm	**1790LBLCWH/1790LBRCWH**

Corner Left-handed

Corner Right-handed

Alcove Left-handed

Alcove Right-handed

LIFETIME WARRANTY

Compatible with AKW Digipumps on **page** 140

L/R in the product code denotes whether the screen is Left or Right handed.

SCREENS

Onyx Shower Cubicle: Accessories

Onyx Shower Seats

See page 374

Onyx 2 Grab Rails

See page 344

Arka Mixer Shower

See page 284

AKW SmartCare Plus Electric Shower

See page 270

AKW SmartCare Lever Electric Shower

See page 274

Wastes

See page 111

Standalone Shower Cubicle

A standalone cubicle provides a comfortable showering solution that can be quickly installed in any room or bedroom, making it an ideal solution when an existing bathroom cannot be accessed and a quick adaptation is required.

LIFETIME WARRANTY

Features & Benefits

- Self-contained cubicle means no alterations to the walls are required
- Suitable for when floors cannot be breached
- Can be installed into any room up or downstairs
- Quick to install kit causing minimum disruption – meaning that a room can be converted quickly
- Easy to fit with slot-together profile system
- Can easily be moved if circumstances change
- Uses Braddan or Sulby shower trays from current AKW product range providing both level-access and surface-mounted solutions
- Gravity and pumped waste options available
- Compatible with popular AKW carer screen options E and M offering optimal access
- Transparent ceiling panel for improved lighting
- Compatible with AKW showers, seats and grab rails
- Optional grab rail and/or riser rail can be fitted to assist with access and use
- Optional ramp provides easy access when used with a surface-mounted shower tray option

Specifications

PET glazed screens and ceiling panel
Polypropylene back and side panels
All cubicles include tray, screen, waste, curtain rail, curtain, gliders and fixings

Standalone Shower Cubicle: Option E

Features & Benefits

+ Bi-folding doors
+ Handed
+ Available with Sulby or Braddan shower trays

Specifications

Latches and handle are included on Option E cubicles

Ramps and grab rails are available as optional extras

Supplied with 2 x 1800mm x 1800mm curtains

Left-handed

Right-handed

Dimensions, Size Options & Product Codes:

Shower Tray Size Options:	1	2	3	4	5	6	7	8	Codes (L/R):
1200 x 700mm (Sulby)	532mm	577mm	327mm	282mm	2100mm	1200mm	700mm	750mm	**23731SL-UK** **23731SR-UK**
1200 x 820mm (Sulby)	532mm	577mm	387mm	342mm	2100mm	1200mm	820mm	750mm	**23735SL-UK** **23735SR-UK**
1200 x 700mm (Braddan Gravity)	532mm	577mm	327mm	282mm	2050mm	1200mm	700mm	750mm	**23731BGL-UK** **23731BGR-UK**
1200 x 820mm (Braddan Gravity)	532mm	577mm	387mm	342mm	2050mm	1200mm	820mm	750mm	**23735BGL-UK** **23735BGR-UK**
1200 x 700mm (Braddan Uplift)	532mm	577mm	327mm	282mm	2050mm	1200mm	700mm	750mm	**23731BPL-UK** **23731BPR-UK**
1200 x 820mm (Braddan Uplift)	532mm	577mm	387mm	342mm	2050mm	1200mm	820mm	750mm	**23735BPL-UK** **23735BPR-UK**

Please note: Other sizes are available on request for Option E – please call customer services on 01905 823 299.

L/R in the product code denotes whether the screen is Left or Right handed.

Standalone Shower Cubicle: Option M

Features & Benefits

+ Bi-folding doors
+ Non - handed
+ Available with Sulby or Braddan shower trays

Specifications

Latches and handle are included on Option E cubicles

Ramps and grab rails are available as optional extras

Supplied with 2 x 1800mm x 1800mm curtains

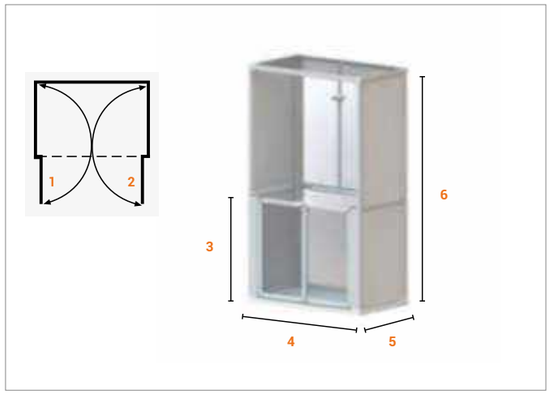

Dimensions, Size Options & Product Codes:

Shower Tray Size Options:	1	2	3	4	5	6	Code:
1200 x 700mm (Sulby)	547mm	547mm	750mm	1200mm	700mm	2100mm	**23711S-UK**
1200 x 820mm (Sulby)	547mm	547mm	750mm	1200mm	820mm	2100mm	**23717S-UK**
1200 x 700mm (Braddan Gravity)	547mm	547mm	750mm	1200mm	700mm	2050mm	**23711BG-UK**
1200 x 820mm (Braddan Gravity)	547mm	547mm	750mm	1200mm	820mm	2050mm	**23717BG-UK**
1200 x 700mm (Braddan Uplift)	547mm	547mm	750mm	1200mm	700mm	2050mm	**23711BP-UK**
1200 x 820mm (Braddan Uplift)	547mm	547mm	750mm	1200mm	820mm	2050mm	**23717BP-UK**

Please note: Other sizes are available on request for Option M – please call customer services on 01905 823 299.

Optional Extras

Description	Dimensions	Product Code:
Straight ramp for Sulby Trays	700mm (w) x 480mm (d) x 90mm (h)	**25009**
40mm Straight Ramp for use with Braddan Trays (1800mm long)	1800mm (w) x 40mm (h)	**25002**
T Shape SS epoxy coated grab rail – White	1110mm x 300mm x 300mm	**01246WH**

Showerloo Shower Cubicle

AKW's Showerloo can be installed anywhere in the home to provide a cost-effective permanent or temporary showering solution.

Features & Benefits

+ Non-handed to fit left or right to accommodate various site conditions
+ Self-contained cubicle, for a quick temporary solution
+ Available with Braddan shower trays
+ Gravity and pumped waste options available
+ Showerloo cubicles have access panel as standard, for easy maintenance access

Specifications

Handles are included with Showerloo cubicles

Ramps and grab rails are available as optional extras

All Showerloo cubicles include tray, screen, waste, glazed ceiling, curtain, rail, gliders and fixings

PET glazed screen and ceiling panel

Polypropylene back and side panels

Minimum width required for access panel is 435mm /17inch

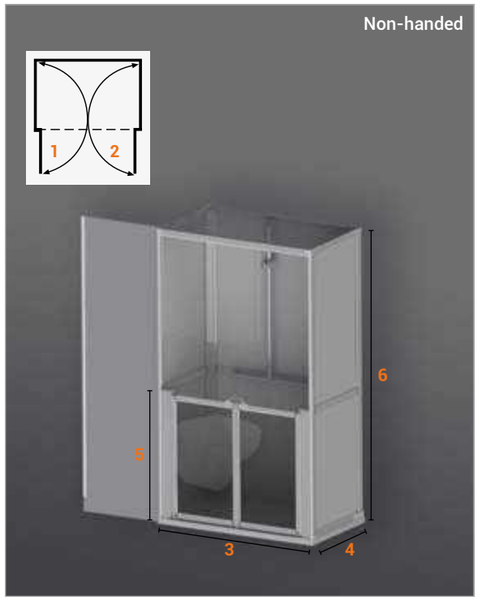

LIFETIME WARRANTY

Dimensions, Size Options & Product Codes:

Shower Tray Size Options:	1	2	3	4	5	6	Code:
1200 x 700mm	547mm	547mm	1200mm	700mm	750mm	1966mm	**23800 BG-UK**
1200 x 820mm	547mm	547mm	1200mm	820mm	750mm	1966mm	**23801 BG-UK**

Additional Products

Wall Hung Livenza WC Pack	**23105L**

dsdc Dementia Design Accredited Product

UNIVERSITY of STIRLING

The AKW SmartCare Lever electric shower has been awarded DSDC Dementia-friendly product accreditation.
See page 566 for more information.

Showers

Electric Showers 269

AKW SmartCare Plus	270
Wireless Remote	273
AKW SmartCare Lever	274
iTherm	277
Shower Isolator Switch	280
Additional Electric Showers	281

Mixer Showers 283

Arka Care Cool Touch Mixer Valve	284
Arka Thermostatic Mixer Valve	284
Onyx Combo Mixer Shower	288
Vettora	290
Additional Mixer Showers	291
Rain Head Shower	292
On/Off Shower Head Handset	294
Eco-Save Mixer Shower	296
Easy Clean Shower Head	297

You may also need:

Shower Screens 151	Timber 327	Wall Panels 309	Safety Flooring 321
Tiles & Accessories 301	Mobility Support 329	Plumbing Fittings 545	

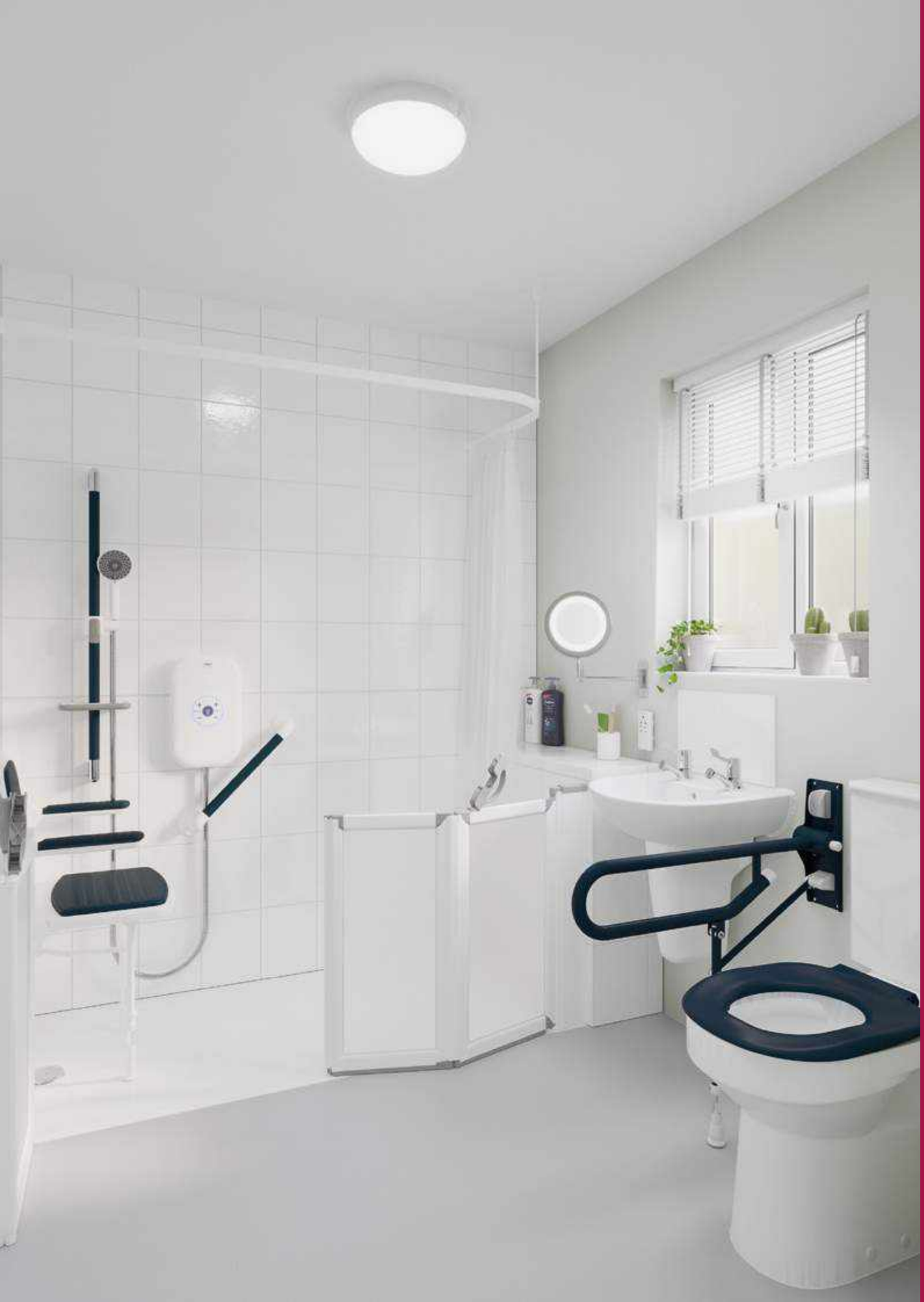

Electric Showers

Showering is an important part of life, which is why we offer innovative electric care showers, many designed in-house by AKW, to ensure a safe and comfortable experience, whatever the space or need.

AKW SmartCare Plus®

Intelligently designed to make showering an easier and less stressful experience for those with visual impairment or dementia, the SmartCare Plus electric shower benefits from a number of innovative care features and comes with a care accessory kit which addresses a range of clinical needs.

Care Features

- Easy-to-use, push-button controls are grouped closely together and feature contrasting, raised tactile symbols to aid users with visual impairment and dementia
- LED-illuminated indicators and audible beeps confirm adjustment in temperature and flow settings, ideal for those with visual impairment and dementia
- Shower memorises last user setting for ease of use
- RNIB mode which enables the shower to be turned on with pre-defined settings
- Matt finish central control panel aids those with visual impairment and dementia
- Rounded surfaces and edges reduce the risk of injury in the event of a trip or fall
- BEAB Care certified, RNIB tried and tested, and DSDC dementia-friendly product accredited
- Thermostatically stabilised temperature
- Maximum water temperature protection with thermal cut-out device to protect shower unit from overheating
- Optional eco-setting limiting flow rate to 6lpm to support the reduction of water & energy consumption
- Automatic shutdown prevents flooding and minimises water and energy wastage
- Phased shutdown ensures a safe, reliable start up and performance
- Includes care accessory kit:
  - 2m anti-kink hose
  - 1m 150kg load-bearing riser rail
  - Shelf with non-handed integral hose retainers
  - Lever-operated sliding handset holder
  - Additional wall-mounted handset holder
  - 3-mode shower head

AKW SmartCare Plus® can connect wirelessly to all AKW DigiPumps.
See from **page** 140

5 year warranty as standard when registered within 30 days of install

Care Features Continued

- Care shower kit is available in various colour choices, with dark blue and mid-grey rails available to provide sufficient colour contrast for those with dementia or visual impairment
- Optional wall-mounted remote on/off button allows users/carers to turn the shower on/off from up to 10m away; available separately
- Optional wireless remote control allows users/carers to turn the shower on/off and adjust temperature/flow settings from up to 10m away; available separately

Installer Features

- 8.5kW / 9.5kW / 10.5kW options
- Quick and easy installation
- 6 electrical / 6 water entry points
- Dual power block for left or right hand wiring
- Retro-fit footprint covers most manufacturers' models
  - No re-tiling required
  - Existing cable & pipework compatible
- Supplied with stainless-steel mounting bracket to support re-use of existing fixing holes
- Comprehensive technical after-sales support
- Wireless connectivity to AKW DigiPumps and P12 waste pump
- 5-year warranty as standard if registered within 30 days of installation

White Care Shower Kit

AKW SmartCare Plus® Electric Shower (Technical Information)

AKW SmartCarePlus

Plumbing Supply

Supply Source	Mains pressure cold water only
Minimum Dynamic Pressure	50kPa (0.5 Bar) – Recommended pressure to ensure high performance is 100kPa (1 Bar)
Maximum Static Pressure	1000kPa (10 Bar)
Inlet Water Temperature Range	3°C – 28°C
Inlet Connection	15mm push-fit
Outlet Connection	1/2" BSP Male thread fitting
Waste Pump Connections	Compatible with AKW DigiPumps and P12 waste pump

Electric Supply

Nominal Rating at 240V	10.5kW, 9.5kW & 8.5kW
Supply Fuse/Circuit Breaker	(10.5kW 45/50A), (9.5kW 40/45A) & (8.5kW 35/40A)
Residual Current Device (RCD)	30mA (must be fitted)
Supply Cable	Refer to current wiring regulations and BS 7671 to determine minimum cable size. No larger than 10mm^2
Stand-by Power Consumption	<0.5W
Isolation Switch (e.g. Pull Cord)	50 Amp Double pole with 3mm contact separation

Product Codes

AKW SmartCare Plus 8.5kW & Chrome Care Kit	**29012CH**
AKW SmartCare Plus 9.5kW & Chrome Care Kit	**29011CH**
AKW SmartCare Plus 10.5kW & Chrome Care Kit	**29010CH**
AKW SmartCare Plus 8.5kW & White Care Kit	**29012WH**
AKW SmartCare Plus 9.5kW & White Care Kit	**29011WH**
AKW SmartCare Plus 10.5kW & White Care Kit	**29010WH**
AKW SmartCare Plus 8.5kW & White Care Kit (Mid-Grey Rail)	**29012MG**
AKW SmartCare Plus 9.5kW & White Care Kit (Mid-Grey Rail)	**29011MG**
AKW SmartCare Plus 10.5kW & White Care Kit (Mid-Grey Rail)	**29010MG**
AKW SmartCare Plus 8.5kW & White Care Kit (Dark Blue Rail)	**29012DB**
AKW SmartCare Plus 9.5kW & White Care Kit (Dark Blue Rail)	**29011DB**
AKW SmartCare Plus 10.5kW & White Care Kit (Dark Blue Rail)	**29010DB**

Dimensions (mm)

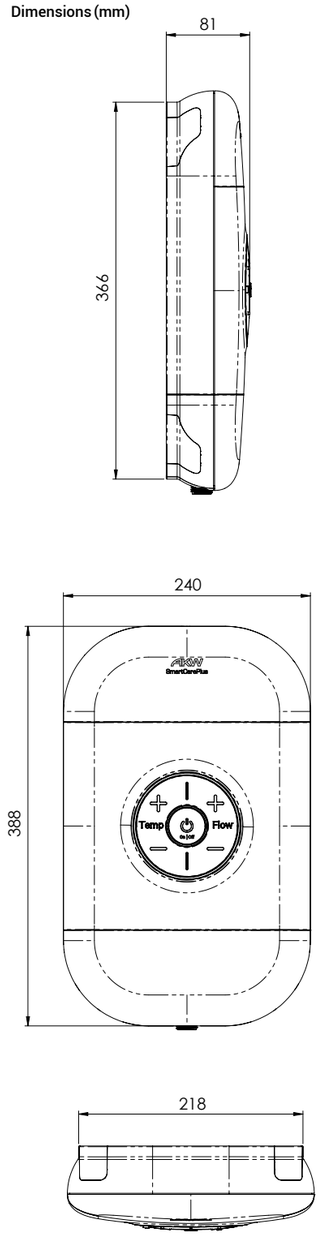

SHOWERS

Wireless Remote

The Smart wireless remote control provides flexibility and control, from up to 10m away. A fully waterproof high grip casing means that it's easy to hold and use.

Features & Benefits

+ Raised symbols
+ Push-button controls
+ Fully waterproof
+ Works up to 10m away from shower unit
+ Control: Power, Temperature and Flow
+ Blue LED activity indicator
+ Wall mount and glass mounted suction cups included

Product Codes

Wireless AKW SmartCare Plus® Remote	**30318**

SmartCare Showers Remote On/Off Button

Designed for use with AKW SmartCare Plus and SmartCare Lever electric showers, the Remote On/Off Button allows you to start/stop the shower operating wirelessly from up to 10 metres away, offering greater flexibility and preventing users and/or carers from getting wet prematurely or unnecessarily.

2 YEAR WARRANTY

UK CA CE

RNIB Tried and Tested

Features & Benefits

+ Soft-press push button is easy to operate
+ Designed to replicate on/off function of power button within shower heater
+ Button switches shower on/off remotely
+ Raised tactile power symbol aids those with visual impairment
+ Small LED light illuminates below the button when shower is in operation; this will flash every 10 seconds to advise when the battery is low
+ Can be installed up to 10m from the shower heater, ensuring the shower can be turned on/off without the user or carer getting wet

Product code

AKW SmartCare Showers Remote On/Off Button	**30316**

SHOWERS

AKW SmartCareLever

AKW SmartCare® Lever

Designed to make showering an easier and less stressfu experience for those with dementia, visual impairment, or limited dexterity, the SmartCare Lever electric shower benefits from a number of innovative care features and is available with a choice of shower kit, with specific care accessories which address a range of clinical needs.

Care Features

+ Easy-to-use lever handle with contrasting mid-grey, soft-touch insert, ideal for those with limited dexterity
+ Audible temperature control beeps and reactive digital LED temperature display indicate settings selection for those with visual impairment
+ Contrasting tactile letters, power symbol, and pointer on the lever, as well as raised dot markers situated by the lowest and hottest temperature settings assist those with visual impairment
+ Matt finish central control panel aids those with visual impairment and dementia
+ Rounded surfaces and edges reduce the risk of injury in the event of a trip or fall
+ BEAB Care certified, RNIB tried and tested, and DSDC dementia-friendly product accredited
+ Thermostatically stabilised temperature
+ Maximum water temperature protection with thermal cut-out device to protect shower unit from overheating
+ Optional eco-setting limiting flow rate to 6 lpm to support the reduction of water & energy consumption
+ Automatic shutdown prevents flooding and minimises water and energy wastage
+ Phased shutdown ensures a safe, reliable start up and performance
+ Optional wall-mounted remote on/off button allows users/carers to turn the shower on/off from up to 10m away; available separately

AKW SmartCare® can connect wirelessly to all AKW DigiPump shower waste pumps.

See **page** 140.

5 YEAR WARRANTY

5 year warranty as standard when registered within 30 days of install

UK CA | CE

BEAB CARE Intertek

RNIB Tried and Tested

WRAS APPROVED PRODUCT

dsdc Dementia Design Accredited Product

BEAB Approved Intertek

EMC EU Intertek

AKW SmartCareLever

Installer Features

+ 8.5kW / 9.5kW options
+ Quick and easy installation
+ 6 electrical / 6 water entry points
+ Dual power block for left or right-hand wiring
+ Retro-fit footprint covers most manufacturers' models
  – No re-tiling required
  – Existing cable and pipework compatible
+ Supplied with stainless-steel mounting bracket to support re-use of existing fixing holes
+ Wireless connectivity to AKW DigiPumps and P12 waste pump
+ 5-year warranty as standard if registered within 30 days of installation

Chrome Standard Shower Kit (1m Riser)

AKW SmartCare® Lever Electric Shower (Technical Information)

Plumbing Supply	
Supply Source	Mains pressure cold water only
Minimum Dynamic Pressure	50kPa (0.5 Bar) – Recommended pressure to ensure high performance is 100kPa (1 Bar)
Maximum Static Pressure	1000kPa (10 Bar)
Inlet Water Temperature Range	3°C – 28°C
Inlet Connection	15mm push-fit
Outlet Connection	1/2" BSP Male thread fitting
Waste Pump Connections	Compatible with AKW DigiPumps and P12 waste pump (wireless or hard-wired connection)

Electric Supply	
Nominal Rating at 240V	9.5kW & 8.5kW
Supply Fuse/Circuit Breaker	(9.5kW 40/45A) & (8.5kW 35/40A)
Residual Current Device (RCD)	30mA (must be fitted)
Supply Cable	Refer to current wiring regulations and BS 7671 to determine minimum cable size. No larger than 10mm^2
Isolation Switch (e.g. Pull Cord)	50 Amp Double pole with 3mm contact separation

Product Codes

AKW SmartCare Lever 8.5kW & Chrome Standard Kit (1m Riser)	**29090**
AKW SmartCare Lever 9.5kW & Chrome Standard Kit (1m Riser)	**29091**
AKW SmartCare Lever 8.5kW & Chrome Care Kit	**29090CHW**
AKW SmartCare Lever 9.5kW & Chrome Care Kit	**29091CHW**
AKW SmartCare Lever 8.5kW & White Care Kit	**29090CGR**
AKW SmartCare Lever 9.5kW & White Care Kit	**29091CGR**
AKW SmartCare Lever 8.5kW & White Care Kit (Mid-Grey Rail)	**29090CGR-MG**
AKW SmartCare Lever 9.5kW & White Care Kit (Mid-Grey Rail)	**29091CGR-MG**
AKW SmartCare Lever 8.5kW & White Care Kit (Dark Blue Rail)	**29090CGR-DB**
AKW SmartCare Lever 9.5kW & White Care Kit (Dark Blue Rail)	**29091CGR-DB**

Dimensions (mm)

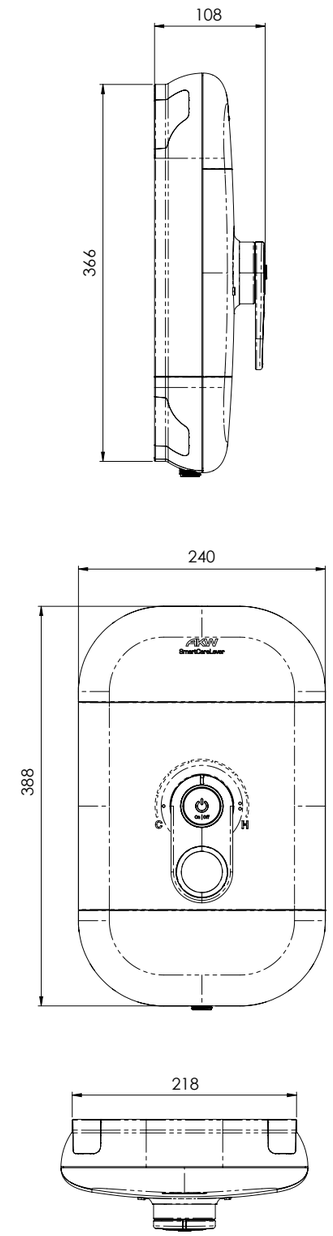

itherm

iTherm Electric Shower

With a contemporary design and discreet care features to aid those with visual impairment, the iTherm electric shower benefits from LED display, thermostatic protection, raised easy-to-grip flow and temperature controls, and comes with a stylish chrome shower kit.

Care Features

- Easy-push power button allows you to maintain temperature/ flow setting preferences
- Power button features an LED illuminated outer bezel to aid those with visual impairment
- Independent dials control flow and thermostatic temperature settings
- Raised chrome dials feature a scalloped surface which is easier to grip and clean
- Digital LED temperature display readout
- Reactive LED display above each dial confirms temperature/ flow settings selected, aiding those with visual impairment
- Matt finish central control panel aids those with visual impairment
- Rounded surfaces and edges reduce the risk of injury in the event of a trip or fall
- Thermostatically stabilised temperature
- Maximum water temperature protection with thermal cut-out device to protect shower unit from overheating
- Optional eco-setting limiting flow rate to 6 lpm to support the reduction of water & energy consumption
- Automatic shutdown prevents flooding and minimises water and energy wastage
- Phased shutdown ensures a safe, reliable start up and performance
- Includes chrome shower kit:
  - 2m anti-kink hose
  - 1m riser rail
  - Hose retainer
  - Adjustable handset holder
  - Additional wall-mounted handset holder
  - 3-mode shower head
  - Soap dish

Chrome Standard Shower Kit (1m Riser)

itherm

Installer Features

- 8.5kW / 9.5kW options
- Quick and easy installation
- 6 electrical / 6 water entry points
- Dual power block for left or right-hand wiring
- Retro-fit footprint covers many manufacturers' models
  – No re-tiling required
  – Existing cable & pipework compatible
- Supplied with stainless-steel mounting bracket to support re-use of existing fixing holes
- Comprehensive technical after-sales support
- Compatible with AKW DigiPumps and P12 Waste Pump via a hard-wired connection
- 5-year warranty as standard if registered within 30 days of installation

5 year warranty as standard when registered within 30 days of install

SHOWERS

iTherm Electric Shower (Technical Information)

itherm

Plumbing Supply

Supply Source	Mains pressure cold water only
Minimum Dynamic Pressure	50kPa (0.5 Bar) – Recommended pressure to ensure high performance is 100kPa (1 Bar)
Maximum Static Pressure	1000kPa (10 Bar)
Inlet Water Temperature Range	3°C – 28°C
Inlet Connection	15mm push-fit
Outlet Connection	1/2" BSP Male thread fitting
Waste Pump Connections	Compatible with AKW Digipumps and P12 waste pump

Electric Supply

Nominal Rating at 240V	9.5kW & 8.5kW
Supply Fuse/Circuit Breaker	(9.5kW 40/45A) & (8.5kW 35/40A)
Residual Current Device (RCD)	30mA (must be fitted)
Supply Cable	Refer to current wiring regulations and BS 7671 to determine minimum cable size. No larger than 10mm^2
Isolation Switch (e.g. Pull Cord)	50 Amp Double pole with 3mm contact separation

Product Codes

AKW iTherm 8.5kW & Chrome Standard Kit (1m Riser)	**29024**
AKW iTherm 9.5kW & Chrome Standard Kit (1m Riser)	**29025**

Dimensions (mm)

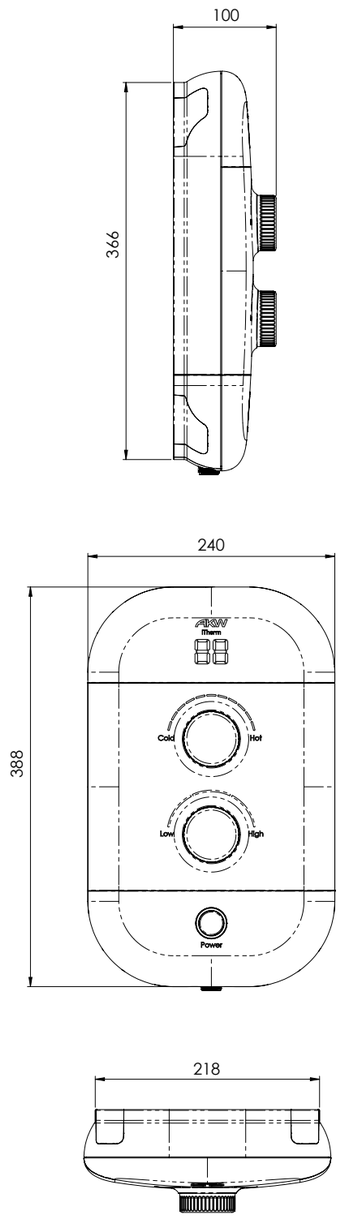

SHOWERS

Shower Isolator Switch

Installing a shower pull cord switch enables you to isolate the power supply to an electric shower if maintenance is required. This product is mounted to the ceiling and operated by hand with a pull cord.

Features & Benefits

+ Mounted on the ceiling to be unobtrusive
+ When the neon power indicator is not illuminated, the power supply has been isolated
+ Provided with a 1.5m pull cord for easy operation
+ Fittings provided to fix the switch to the back box

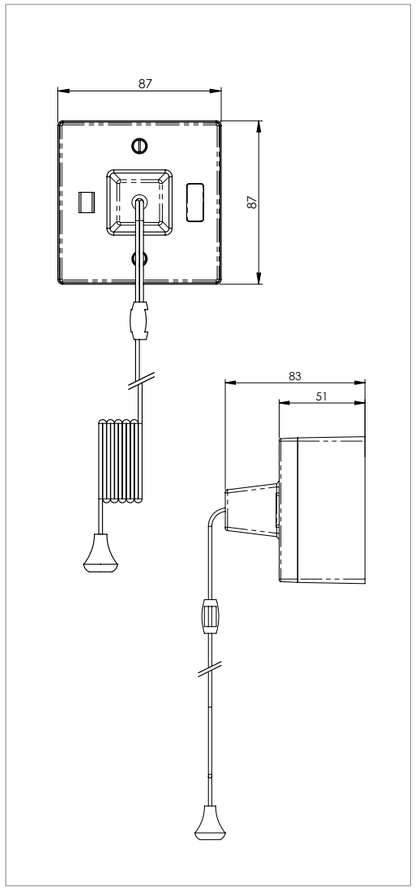

Specifications

Amp Rating	50A
Manufacturer Warranty	5 Years
No. of Earth Terminals	2
No. of Ways	1 Way
Number of Poles	Double Pole
Parent Colour	White
Pieces in Pack/Case	1
Power Voltage Supply	240V
Size (mm)	(L) 87 x (W) 87 x (D) 83
Switches & Sockets Finish	Plastic
Switches & Sockets Profile Type	Raised Square
Switch Operation	Pull Cord
Switch Product Type	Appliance

Product code

Shower Isolation Pull Cord Switch 50A with Back Box	**30160**

SHOWERS

Additional Electric Showers

Mira

Mira Flex Shower 8.7kw	**25326**
Mira Advance Flex 9kw-Low Pressure	**06ES03-LP**
Mira Advance ATL Flex Extra Bluetooth	**06ES07**
Mira Advance Flex Fittings Kit	**06ES-MAFK**
Mira Rada V12 Exposed Shower Valve	**25299**
Mira Rada V12 Concealed Shower Valve	**25298**

Redring

Selectronic Premier Care 8.5kW	**06ES44-85**
Selectronic Premier Care 9.5kW	**06ES45-95**
Selectronic Premier Care 10.8kW	**06ES46-108**
Selectronic Premier Care 8.5kW Pump Interface	**06ES47-85**
Selectronic Premier Care 9.5kW Pump Interface	**06ES48-95**

Triton

Triton Omnicare Thermostatic Shower	**25327**
Triton Omnicare Design 8.5kW Grab electric shower	**06ES60GB**
Triton Omnicare Design 9.5kW electric shower	**06ES61**

SHOWERS

Mixer Showers

You do not need to choose between style or substance with our range of modern mixer showers, which feature contemporary chrome fixtures and support a variety of care requirements.

Arka Cool Touch Mixer Valve

Offering a refreshing, safe showering experience, the Arka Cool Touch Mixer Valve features two easy-to-use paddle levers, TMV2 approval, and cool touch technology for peace of mind.

To allow greater flexibility based on the user's requirements, the Arka Cool Touch Mixer Valve can be ordered with or without a shower kit.

Mixer Valve Features & Benefits

+ Contemporary brass mixer valve with a polished chrome finish
+ Reliable and safe thermostatic performance which prevents scalding with TMV2 approval
+ Maximum pre-set temperature of 38ºC which can be manually overridden and increased to 41ºC
+ Easy-to-use paddle levers are suitable for users of all abilities and independently control temperature and flow, with icons on the valve to confirm user selection
+ Integral double check valves ensure the elimination of backflow
+ Central bottom outlet for simple connection to shower hose

Standard & Care Shower Kits Features & Benefits

+ Standard kit features stylish 1m chrome-finished riser rail
+ Care kit features stylish 1m weight-loading riser rail, offering additional support for those up to 23.5st (150kg)
+ Riser rail features adjustable holder for shower head to accommodate different user heights
+ Multi-functional shower head offers three spray modes and features durable silicone nozzles which are easy to clean
+ 2m long shower hose enables manoeuvrability when showering independently, or with assistance
+ Soap dish features integral hose retaining ring which prevents the shower head being dropped and contaminated
+ Additional shower head bracket for alternative positioning, ideal for users of all abilities

Arka Care Cool Touch

5 YEAR WARRANTY

Extended options available

WRAS APPROVED PRODUCT

TMV2 Certified to NSF TMV2

SHOWERS

Specifications

Dynamic Pressure Range	0.5 to 5 bar dynamic
Static Pressure	Max. 10 bar static pressure
Inlet fittings	¾" BSP
Outlet fitting	½" BSP
Material Finish	Brass, Plastic Chrome Plated
Colour	Silver
Minimum Dynamic Pressure	0.5 to 5 bar dynamic
Maximum Static Pressure	10 bar static pressure
Inlet Cold Temperature Range	>25ºC
Inlet Hot Temperature Range	55ºC-65ºC
Temperate Range	25ºC~49ºC max adjustable range
Safety Setting	38ºC override button setting
	TMV2 Max set temp: 41ºC
Flow	8.5L/min @ 3 bar
Material – body construction (including mounting brackets):	Brass, chrome plated
Material – handle construction:	Plastic, chrome plated
Material – levers:	Zinc Alloy, chrome plated
Material – riser rail:	Stainless Steel

Product Codes

Arka Cool Touch Mixer Valve	**25430**
Arka Cool Touch Mixer Shower with Care Kit	**25430CH**

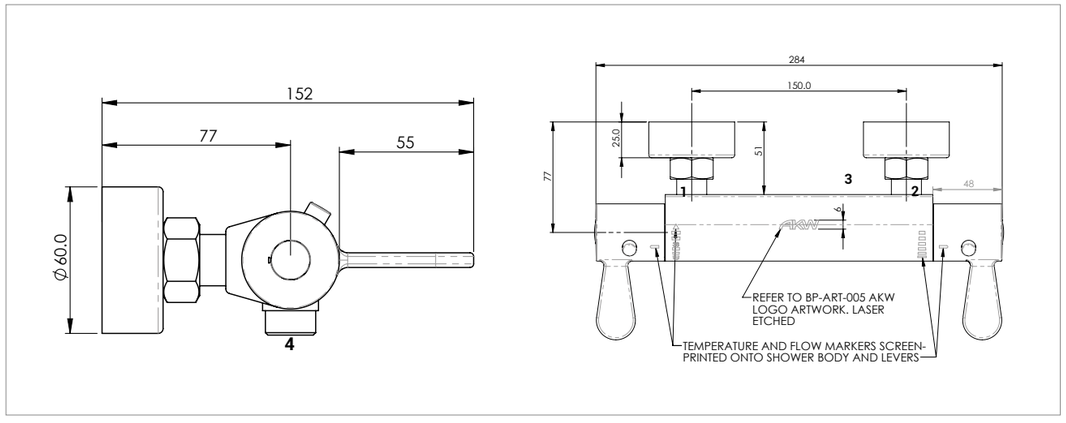

SHOWERS

Arka® Thermostatic Mixer Valve

Offering a refreshing, safe showering experience, the Arka Thermostatic Mixer Valve features two easy-to-use paddle levers and offers thermostatic protection with TMV3 approval.

To allow greater flexibility based on the user's requirements, the Arka Thermostatic Mixer Valve can be ordered with or without a shower kit.

Mixer Valve Features & Benefits

+ Contemporary brass mixer valve with a polished chrome finish
+ Reliable and safe thermostatic performance which prevents scalding with TMV3 approval
+ Maximum pre-set temperature of 38°C which can be manually overridden and increased to 41°C
+ Easy-to-use paddle levers are suitable for users of all abilities and independently control temperature and flow, with icons on the valve to confirm user selection
+ Integral double check valves ensure the elimination of backflow
+ Central bottom outlet for simple connection to shower hose

Standard & Care Shower Kits Features & Benefits

+ Standard kit features stylish 1m chrome-finished riser rail
+ Care kit features 1m weight-loading riser rail, offering additional support for those up to 23.5st (150kg)
+ Riser rail features adjustable holder for shower head to accommodate different user heights
+ Multifunctional shower head offers three spray modes and features durable silicone nozzles which are easy to clean
+ 2m long shower hose enables manoeuvrability when showering independently, or with assistance
+ Soap dish features integral hose retaining ring which prevents the shower head being dropped and contaminated
+ Additional shower head bracket for alternative positioning, ideal for users of all abilities

AKW Arka Thermostatic Mixer Valve with Standard Kit

AKW Arka Thermostatic Mixer Valve with Care Kit

+ BS EN1111:1999
+ BS EN1287:1999

5 YEAR WARRANTY
Extended options available

WRAS APPROVED PRODUCT

TMV3 Certified to NSF TMV3

Product Code

AKW Arka Thermostatic Mixer Valve	**25421-2**
Arka Thermostatic Mixer Valve with Standard Kit	**25420**
Arka Care Thermostatic Mixer Valve with Care Kit	**25420CH**
AKW Arka Standard Handset and Rail	**25422**
AKW Care Kit - Chrome	**25422CH**
Surface-Mounted Pipework Fittings for Shower Mixer	**25423**
Wall Mount Fixings Chrome Plates for Shower Mixer	**25424**
Rainhead Shower Kit with Handset	**30853**

Specifications

Materials:	Brass valve with chrome-plated finish
Minimum Dynamic Pressure	0.2 Bar
Maximum Dynamic Pressure	5 Bar
Maximum Static Pressure	10 bar
Maximum Flow Rate (approx)	20 l/min (when tested at 3 bar)
Max Temperature	38°C (limited high temp) 41°C (+/-2°C) achieved using override button
Valve Type	Bar Valve with Dual Independent Thermostatic and Flow Control
Inlet Centre Dimension	150mm(+/-15)
Water Entry	Back
Approvals	TMV3, WRAS, BSEN1111:1999, BSEN1287:1999
Inlet Connectors	1/2-3/4" BSP
	7-8.5 Litres per Minute (when tested at 3 Bar)
Maximum Flow	21 Litres per Minute (when tested at 3 Bar)

Please note: Temperature and flow rates are limited by the override buttons on the paddles, these rates can be altered to suit user preference during installation if required

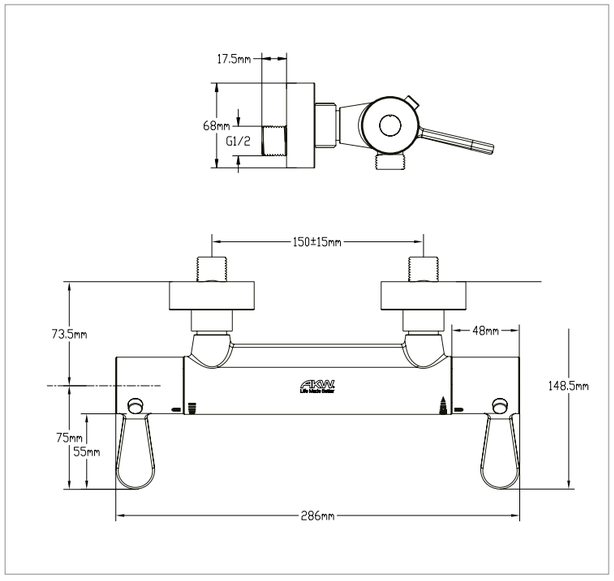

AKW Arka Thermostatic Mixer Valve

Onyx Combo Mixer Shower

Offering a safe showering experience, the Onyx Combo Mixer Shower features a TMV2-approved mixer valve which is cool to touch and easily operated using two paddle levers.

The Onyx Combo also cleverly incorporates two weight-loading grab rails into the L-shaped design, these extend from the valve with a vertical riser and horizontal grab rail able to support users of up to 23.5st (150kg).

For greater flexibility, the Onyx Combo is available in left and right-handed configurations.

Onyx Combo Mixer Shower
Right-Handed Option

Features & Benefits

- TMV2-approved mixer valve offers thermostatic protection, providing peace of mind
- Mixer valve is cool to touch when in use to prevent scalding
- Individual lever paddles control temperature and flow, with icons on the valve to confirm selection
- Vertical riser and horizontal grab rails can support users of up to 23.5st (150kg)
- Multifunctional shower head offers 3 spray modes and features durable silicone nozzles which are easy to clean
- 2m long shower hose enables manoeuvrability when showering independently, or with assistance
- Riser rail features adjustable holder for shower head to accommodate different user heights
- Contemporary design with polished chrome finish, which complements the AKW Onyx collection of grab rails, shower seats, trays, and accessories
- Available in left or right-handed configurations
- Supplied with interchangeable mixer valve paddles in white and black

3 YEAR WARRANTY
Extended options available

WRAS APPROVED PRODUCT

TMV2 SCHEME

SHOWERS

Specifications

Fixing points per wall flange:	3
Wall flanges:	5
Fixing points for additional shower head holder:	2
Dynamic pressure:	0.5-5 bar
Static pressure:	1-10 bar
Inlet fitting:	½" BSP
Outlet fitting:	½" BSP
Inlet cold temperature range:	4-25°C
Inlet hot temperature range:	55-65°C
Temperature range:	16-49°C
Safety setting:	38°C limited high temperature, override button can achieve up to 49°C (+/-2°C)
Approx. flow rate:	8.5 l/min (3 bar)

Product Code

Onyx Combo Mixer Shower LH	**25436L-LS**
Onyx Combo Mixer Shower RH	**25436R-LS**

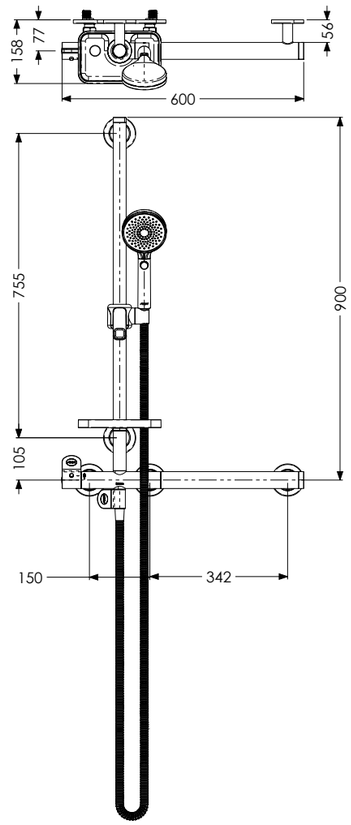

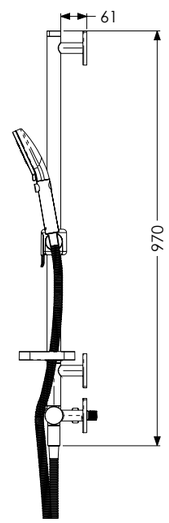

Onyx Combo Mixer Shower RH

SHOWERS

Vettora Thermostatic Mixer Shower

Stylish but simple, the Vettora is a TMV2 thermostatically controlled mixer shower.

Features & Benefits

+ Thermostatically controlled to prevent scalding and provides ultimate reassurance
+ Clear flow and temperature indicators for users or all abilities
+ Easy-grip levers for flow and temperature control for users with limited dexterity
+ Contemporary chrome-plated finish for any modern bathroom
+ Restricted flow option provides cost savings on water consumption
+ Easy-twist shower head for easy operation
+ Easily adjustable for a comfortable shower
+ Shower valve supplied with multi-function shower head, hose, riser rail and all fixings
+ Temperature override button should the user require a hotter shower

Specifications

Minimum Dynamic Pressure	0.5 Bar
Maximum Dynamic Pressure	5 Bar
Maximum Static Pressure	10 Bar
Dimension for Fitting	150mm Inlet Centres
Concealed & Exposed Water Entry	Back
Inlet Connectors	3/4" BSP
Valve Type:	Thermostatic Bar Shower Mixer with Independent Flow & Temperature Control
Approvals	TMV2, WRAS
Maximum Pre-Set Temperature	38°C
Maximum Pressure Difference (between Hot & Cold Water Supply)	1 Bar
Maximum Flow	10 Litres per Minute (when tested at 2 Bar)

Product Codes

Vettora Thermostatic Bar Mixer Valve	**25657**
Vettora Thermostatic Bar Mixer Valve with Kit	**25658**
Surface-Mounted Pipework Fittings for Shower Mixer	**25423**
Wall Mount Fixings Chrome Plates for Shower Mixer	**25424**

Dimensions (mm)

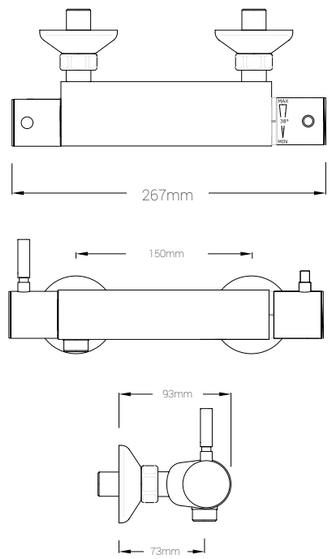

Additional Mixer Showers:

Mira

Mira Select Flex Mixer Shower EV	**06MS10**

Triton

Triton Elina Exposed Mixer Valve - Grabrail Kit	**06MS15**
Triton Elina Bar Mixer valve TMV3 with Grabrail Kit	**06MS16**
Triton Exe Lever Bar Mixer valve TMV2, riser rail & hose kit	**06MS17**

Bristan

Bristan Opac Care Mixer Shower	**06MS22P**

Rain Head Shower Kit with Handset (excluding shower valve)

Our contemporary rain head shower kit is the perfect addition to any modern bathroom, with compatibility across our range of mixer shower valves and mixer bath taps.

The kit features a fixed shower head which provides a steady water stream that mimics rainfall for a luxurious showering experience. For more flexibility, a roaming handset is also included, with the flow of water quickly and easily switched between the rain head and handset, with our lever handle diverter.

LIFETIME WARRANTY

WRAS APPROVED PRODUCT
Components only

SHOWERS

Features & Benefits

- Contemporary design with a polished chrome finish, suitable for use in a wide range of bathrooms.
- Rainfall shower head height can be adjusted (range of 50-425mm) to accommodate different user heights.
- Riser rail features adjustable holder for roaming handset to accommodate different user heights.
- Multifunctional kit allows users to choose between fixed rainfall shower head and roaming handset for greater flexibility.
- Lever handle diverter allows users to easily direct the water flow between the rainfall shower head, handset, or both, with icons to confirm the mode selected.
- Compatible with AKW mixer shower valves and bath shower mixer taps.
- Rainfall shower head tilts 25° from horizontal position to direct water flow based on user preference.
- Handset benefits from three different spray patterns to cater to a variety of user requirements.
- Durable silicone nozzles allow for easier cleaning.

Specification

Ceramic disc technology within valve, connecting to selected outlet (rainfall shower head or handset)
Minimum pressure required: 0.5 bar
Flow Rates (approx. based on 1 bar pressure): 8.7 l/min (rainfall shower head), 6 l/min (handset)
Chrome-finished rainfall shower head, riser rail and handset
Handset features grey face plate
Handset includes flexible 1.5m hose
0.6m hose connects shower kit to mixer valve or tap (valve/tap available separately)

Product Code

Rain Head Shower Kit with Handset	**30853**
Arka Cool Touch Mixer Valve	**25430**
Arka Thermostatic Mixer Shower	**25421-2**
Vettora Thermostatic Bar Mixer Valve	**25657**
Thermostatic Peg Lever Bath Shower Mixer Tap	**30817**
AKW Denova Bath Shower Mixer Tap	**30816**

Dimensions (mm)

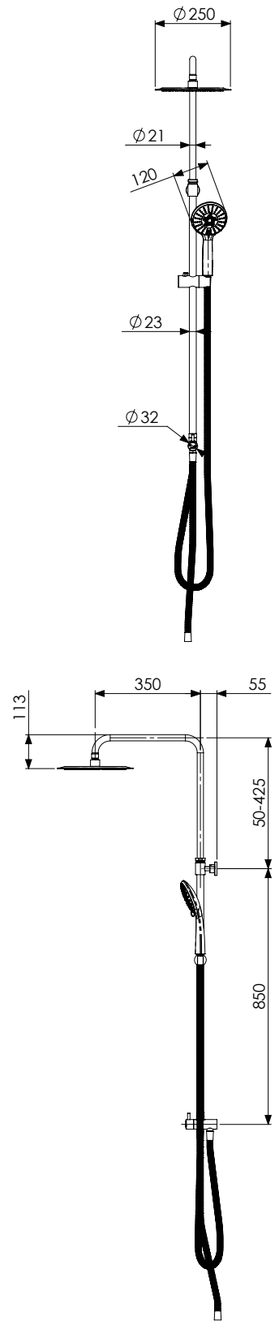

SHOWERS

On/Off Shower Head Handset

The AKW On/Off Shower Head Handset has been designed to support care-assisted showering, where water flow can be conveniently turned off during shampooing/ washing at the press of a button. This shower head is available as an optional extra for all AKW Mixer Showers.

5 YEAR WARRANTY

Features & Benefits

- Convenient On/Off button which can open and close thewater flow, a helpful feature for care-assisted showering
- On/Off button can support households with water & cost savings, as the flow of water can be efficiently stopped while the user attends to washing their hair, and quickly turned back on to re-open the flow of water
- A small amount of water flow will continue when the off button is used, this indicates to the user that the shower is switched on and still in use until switched off by the mains
- Nozzles can be rubbed clean, for easy cleaning and limescale removal
- The On/Off Shower Head Handset has 3 modes / spray patterns: Fine, Bubble, Jet. Spray pattern can be easily changed by the user
- Compatible with all AKW mixer showers
- Stylish chrome finish to compliment mixer shower accessories
- 5-year warranty for peace of mind.

Product Code

On/Off Shower Head Handset	**20-017-062**

Dimensions (mm)

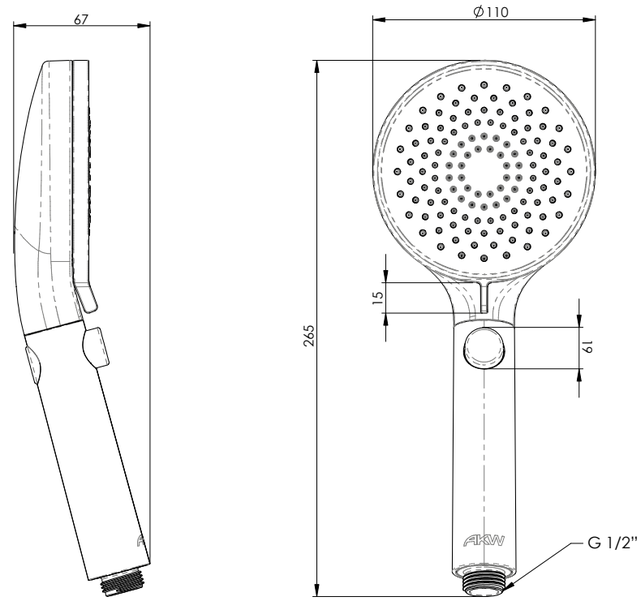

Eco-Save Mixer Shower

Contour Eco-save mixer shower is the only thermostatic & pressure balancing mixer shower, designed to be the safest, anti-scald value for money mixer shower available.

The stylish shape of the Eco-save mixer shower compliments the unique functions and the environmental friendly aspects which distinguish this mixer shower. A cleverly engineered technique saves water and energy without compromising on comfort.

Features & Benefits

+ Anti-legionella hose kit for low use areas
+ Specially designed hose, which has no dead leg loop
+ Integrated dump valve dispels all water as the shower is switched off
+ Flexi coil shower hose is coloured black to ensure reduced levels of luminosity, helping to reduce the growth of bacteria

Specification

Maximum Temperature:	90º
Minimum Pressure:	0.5 Bar
Maximum Pressure:	16.0 Bar
Pressure Differential:	10.0 Bar
Normal Control Temperature:	41º
Temp Differential:	0ºc
Max Output:	8 l/pm @ 6 Bar
Hose:	1.75m
Riser Bar:	1.15m

Product Codes

Eco-save Mixer Shower	**06MS01**
Eco-save Mixer Shower Exposed Kit	**06MS01E**

SHOWERS

Easy Clean Shower Head

The AKW easy clean shower head has been designed for use when hygiene is the top priority, as it facilitates regular and efficient cleaning through its unique removable faceplate. This shower head is available as an optional extra for all AKW Electric and Mixer showers.

Features & Benefits

+ Simple three component construction (body, nozzles, faceplate), easy to dismantle to individually clean components
+ Removable faceplate designed with three removal assist tabs for quick and easy cleaning
+ Behind the faceplate the inside is hollow with no inner-workings or crevices for bacteria to form around
+ Offers a single spray pattern setting for those who want a hassle-free shower head
+ Supplied with two faceplates white and grey and these are also available to purchase separately (as spares)
+ Compatible with all AKW mixer and electric showers
+ Chrome finished body improves aesthetics

Product Codes

Easy Clean Chrome Shower Handset with spare white faceplate	**13-012-269**
Easy Clean shower handset spares – white and grey faceplates	**13-012-270**

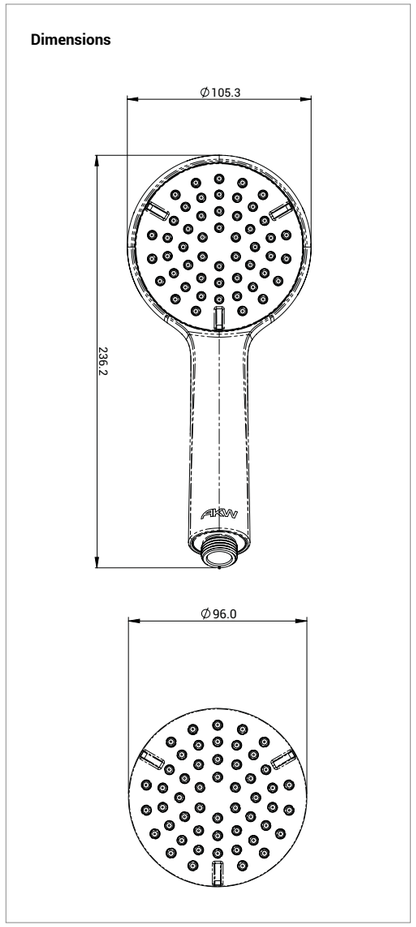

5 YEAR WARRANTY

SHOWERS

Walls & Safety Flooring

Tiles & Accessories 301

Super White Bumpy Tiles 302
Coloured Tiles 303
Mosaic Tiles 304
Tile Edge Trim & Strips 304
Tile Backer Board 305
Tile Spacers 305
Tile Grout 306
Tile Adhesive 306

Wall Panels 309

Marlbrook Wall Panels 310
Origins Wall Panels 313
Shower Niches 316
Access Panel 319

Safety Flooring 321

Accessories 323
Timber 327

You may also need:

Shower Screens 151
Mobility Support 329
Plumbing Fittings 545

Tiles & Accessories

Achieve a stylish and professional finish with AKW's range of ceramic tiles and tiling accessories for kitchens and bathrooms. From technically advanced tiles to grout and adhesive, we've got it covered.

Super White Bumpy Tiles

These super white bumpy tiles are the perfect choice for bathroom installations as they offer fantastic benefits, particularly for those who are visually impaired or who have dementia, due to the super white bumpy finish which allows maximum colour contrast to be achieved.

Features & Benefits

+ Bumpy effect reduces glare which is ideal for the visually impaired and people with dementia
+ Contains Zircon minerals to enhance the white finish to achieve maximum colour contrast
+ A variety of choice for installation with in three different sizes offered – 200x250mm and 250x330mm
+ Easy to cut and install improving efficiency and the overall installation experience
+ Ideal for domestic and commercial internal wall applications
+ Reverse edge of the tile is beige in colour to uphold the intensity of the white glaze guaranteeing a superior product

Product Codes

200 x 250mm (20 pack = 1m²)	**30075**
250 x 330mm (18 pack = 1.5m²)	**30076**

Coloured Tiles

Features & Benefits

+ Digitally printed finishes, meaning a consistent finish on all tiles
+ Ceramic material provides longevity and peace of mind
+ Easy to cut and install improving efficiency and the overall installation experience
+ Ideal for domestic and commercial internal wall applications
+ Reverse edge of the tile is beige in colour to uphold the intensity of the white glaze guaranteeing a superior product
+ A variety of choice with four new colours on offer in 8mm thickness
+ Four new colours on offer in 8mm thickness

Product Codes

Flat Aspendos Light Grey 400x250mm (1.4msq) 14pk	**30091AGR**
Flat Palace Cream 400x250mm (1.4msq) 14pk	**30091PAL**
Flat Gloss Plain White 600x300mm (1.8msq) 10pk	**30091WH2**
Flat Grey Cloud 400x250mm (1.4msq) 14pk	**30091GCL**

Palace Cream tiled bathroom

Flat Aspendos Light Grey

Flat Palace Cream

Flat Gloss White

Flat Grey Cloud

Mosaic Tiles

Features & Benefits

+ Easy to cut mesh backing to preferred size with a craft knife or scissors
+ Glossy, elegant finish

Marble

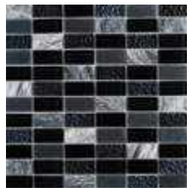

Grey

Blue

Product Codes

Marble 300x300x8mm	**30095MRB**
Grey 300x300x8mm	**30095GRY**
Blue 300x300x8mm	**30095BLU**

Tile Edge Trim & Strips

Features & Benefits

+ Tile edging protects the edge of tiles from damage and neatly covers the unglazed tile edges
+ Transition strips provide a smooth transition between tiles and flooring for a clean, smart look
+ Tile edging is available in matte white to blend perfectly with all white tiles
+ Slightly rounded corners give a softer and neater edge to tiles for a professional finish

Tile Edging Trim

Tile to Vinyl Floor Transition Strip

Safety Flooring to Wall Trim with flexible lip

Product Codes

8mm Tile Edging Trim 3m/pc (pack of 10)	**30072**
Tile to Vinyl Floor Transition Strip 3m/pc (pack of 10)	**30073**
Safety Flooring to Wall Trim with flexible lip 3m/pc	**21905**

Tile Backer Board

Features & Benefits

+ Extremely strong and durable
+ Smooth glass fibre reinforced surface
+ Quick to install
+ Lightweight extruded Polystyrene core
+ Great insulation solution for wet rooms and dry lining buildings
+ Tile backer boards create a waterproof barrier behind the tiles
+ The concrete coating adds strength and rigidity, creating a smooth and durable surface that is ideal for the application of tile adhesive and grout

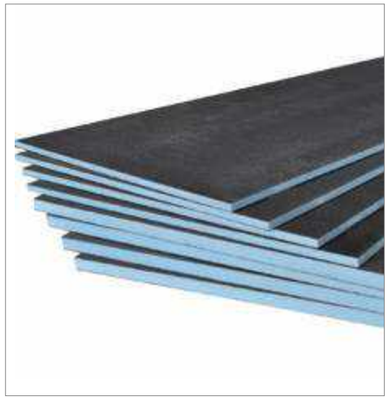

Product Codes

6mm x 1200mm x 600mm	**27705**
10mm x 1200mm x 600mm	**27706**
12mm x 1200mm x 600mm	**27707**

Tile Spacers

Features & Benefits

+ Can be cut to create 'T-shaped' spacers
+ Made from tough durable plastic for re-use

Product Codes

2mm Tile Spacers (500 pack)	**30069**
3mm Tile Spacers (500 pack)	**30070**
4mm Tile Spacers (500 pack)	**30071**

Bond It Steri-Grout for Floor and Wall Tiles

Features & Benefits

+ Specially formulated Steri-Grout
+ Antibacterial for sanitary installations
+ Formulated to be slump-free and flexible for quick application and easy filling of deep joints
+ Contains fungicide to inhibit black mould growth
+ Drying time of 12-24 hours*

Product Code

Bond It Steri-Grout for Floor and Wall Tiles (3kg Bag)	**30077**

Bond It Non-Slip Ceramic Wall Tile Adhesive

Features & Benefits

+ Ready mixed polymer based adhesive
+ Suitable for fixing all types of ceramic wall tiles
+ 13kg tub offers a minimum coverage of 6sqm
+ Standard drying time of 24-72 hours*
+ Superior grip properties ensure reduced slip

Product Code

Bond It Non-Slip Ceramic Wall Tile Adhesive 13kg	**30078**

*Dependent on site conditions

Bond-it Premium Ceramic Tile Adhesive

Features & Benefits

+ For use with ceramic wall tiles, including mosaics
+ Excellent grip properties, reducing the need for spacers and battens
+ Coverage: 15kg tub covers 5sqm*
+ Drying time 24-72 hours*

Product Code

Bond-it Premium Ceramic Tile Adhesive 15kg	**30127**

WALLS / FLOOR

Wall Panels

Wall panels are an increasingly popular alternative to traditional tiling and AKW is proud to stock two wall panel ranges: Marlbook and Origins. Wall panels offer number of features and benefits, including:

+ More cost-effective compared to tiling
+ Quick and easy to install
+ No grout means no more mould
+ Low maintenance solution

Marlbrook® Wall Panels

AKW Marlbrook wall panels offer a cost-effective bathroom solution that does not compromise on style. With four luxurious styles to choose from and a water and scratch-resistant laminate coating, wall panels allow you to create a sophisticated bathroom area quickly and efficiently.

Features & Benefits

- Duo finish wall panels (colour finish on both sides) are more forgiving as it allows either side to be used as the face if damage occurs on site, reducing the chance of needing replacements
- Quick and easy to fit with the items in your toolbox – no specialist skills or equipment needed to install
- Low maintenance bathroom solution
- Square-edged panels
- Panels cover a large area and can be fitted directly over tiles, making installation less labour intensive
- High-Pressure Laminate (HPL) is bonded to both faces of the plywood to give a completely waterproof surface
- Wall panels are made of structural materials, meaning seats and grab rails can be fitted securely, without impacting weight loading
- A wide variety of extrusions are available, offering a solution to any installation challenge
- Maintenance free, no need for additional grouting
- Square-edged panels easily accommodate uneven wall finishes

Specifications

Panel size 1220mm x 2440mm x 12mm
Square edged panels
High-pressure laminate (HPL) faces on WPS plywood substrate core
Hard-wearing structural grade material
Multiple extrusions available

Matt Grey

Quartz

Marlbrook® Wall Panels (Colour Options, Product Codes & Dimensions)

Product Codes

Wallboard 2440 x 1220mm Black Marble	**27390BMR**
Wallboard 2440 x 1220mm Quartz	**27390QRZ**
Wallboard 2440 x 1220mm Savannah	**27390SVH**
Wallboard 2440 x 1220mm Gloss White	**27390WHT**
Wallboard 2440 x 1220mm Matt Grey	**27390GRC**
Wallboard 2440 x 1220mm White Marble	**27390WMR**

Extrusions & Accessories

Wallboard 'H' Section Ali – 2440mm	**27685**
Wallboard Internal Corner Ali – 2440mm	**27682**
Wallboard Radiused External Corner Ali – 2440mm	**27680**
Wallboard Square Edging Strip Ali – 2440mm	**27683**
Wallboard Radiused Edging Strip Ali – 2440mm	**27681**
Wallboard 'H' section PVC – 2440mm	**27686**
Wallboard Internal Corner PVC – 2440mm	**27692**
Wallboard Radiused External Corner PVC – 2440mm	**27691**
Wallboard Square Edging Strip PVC – 2440mm	**27694**
Wallboard Radiused Edging Strip PVC – 2440mm	**27693**
Wallboard Bottom onto Vinyl PVC – 3000mm	**27690**
Wallboard Bottom onto Tray PVC – 3000mm	**27689**
Wallboard Bottom onto Tile Ali – 3000mm	**27684**
Wallboard Internal Corner Ali and PVC Assembly	**27688**
Wallboard 'H' section Ali and PVC Assembly	**27687**
Multi-Purpose Adhesive 380ml Tube*	**27135**
Silicon Tube	**27144**

Note: PVC profiles are white.

*One tube of adhesive recommended per panel.

Colour Options

Black Marble

Quartz

Savannah

White Gloss

Matt Grey

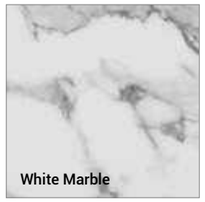
White Marble

Dimensions

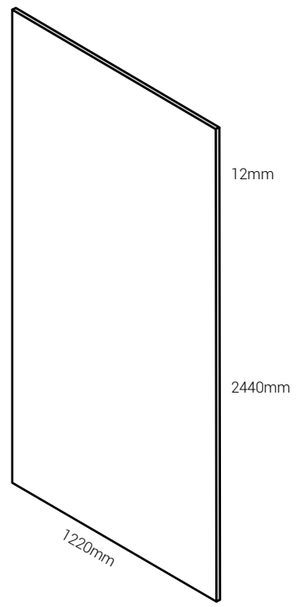

35 YEAR WARRANTY

Marlbook Wall Panels (Profiles)

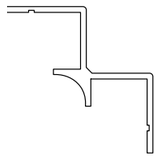

Internal corner
Length: 2440mm
Product codes:
Aluminium: 27682
PVC: 27692

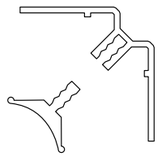

2 piece internal corner
Length: 2440mm
Product code: 27688

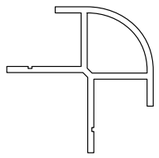

External corner
Length: 2440mm
Product code: 27680

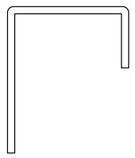

Edging strip (end cap)
Length: 2440mm
Product code:
Aluminium: 27683
PVC: 27694

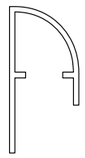

Radiused edging strip
Length: 2440mm
Product code:
Aluminium: 27661
PVC: 27693

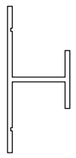

H-section
Length: 2440mm
Product code: 27686

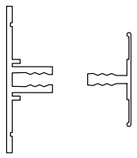

2 piece H-section
Length: 2440mm
Product code: 27687

Wall Panel to Tile Profile – Aluminium
Length: 3000mm
Product code: 27684

Wall Panel to Vinyl Floor Profile – PVC
Length: 3000mm
Product code: 27690

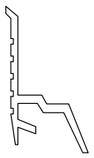

Wall Panel to Tray Profile – PVC
Length: 3000mm
Product code: 27689

Origins Wall Panels

Add a touch of sophistication to any project with this striking and contemporary range of wall panels. Featuring subtle but complex textures in a range of stylish colours, this highly durable and easy to install wall covering system ensures perfect results every time.

Features & Benefits

- Available in 14 contemporary decors inspired by latest interior design trends
- The printed paper design is impregnated with phenolic and melamine resins, dried and compressed to form a hard-wearing, high pressure laminate (HPL) coating on a WBP plywood substrate core for square edge board and exterior grade medium density fibreboard (MDF) for tongue and groove boards
- Quick and easy to fit with no specialist skills or equipment needed to install
- Hard-wearing structural grade material
- Wide variety of extrusions available, offering a solution to any installation challenge
- Made of structural materials so fixtures such as shower seats and grab rails can be fitted securely, without impacting weight loading
- Maintenance free, no need for additional grouting
- Tongue and groove click system (2400 x 600mm & 2400 x 900mm) provides a subtle, seamless finish and is an alternative to installing two panels with a straight joint profile

Specifications

3 panel sizes:
600mm x 2400mm x 11mm (Tongue & Groove)
900mm 2400mm x 11mm (Tongue & Groove)
1200mm x 2400mm x 11mm (Square edged)

High-pressure laminate (HPL) faces on WPS plywood substrate core (Square edge) & exterior grade medium density fibreboard (MDF) (Tongue & Groove)

Hard-wearing structural grade material

Multiple extrusions available

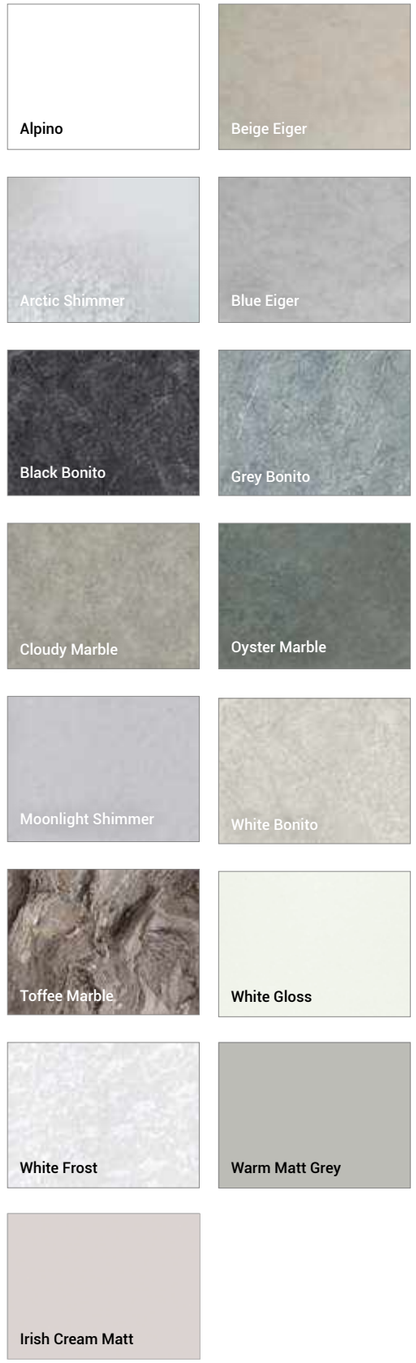

35 YEAR WARRANTY

Various stocked colours please call customer services for more information

Origins Wall Panels (Product Codes)

Product Codes

Wall Panels (11mm deep):	600 x 2400mm *(Tongue & Groove)*	900 x 2400mm *(Tongue & Groove)*	1200 x 2400mm *(Square Edged)*
Alpine	**27724ALP**	**27723ALP**	**27722ALP**
Arctic Shimmer	**27724ATS**	**27723ATS**	**27722ATS**
Beige Eiger	**27724BGE**	**27723BGE**	**27722BGE**
Black Bonito	**27724BKB**	**27723BKB**	**27722BKB**
Blue Eiger	**27724BLE**	**27723BLE**	**27722BLE**
Cloudy Marble	**27724CLM**	**27723CLM**	**27722CLM**
Grey Bonito	**27724GYB**	**27723GYB**	**27722GYB**
Irish Cream Matt	**27724ICM**	**27723ICM**	**27722ICM**
Moonlight Shimmer	**27724MLS**	**27723MLS**	**27722MLS**
Oyster Marble	**27724OSM**	**27723OSM**	**27722OSM**
Toffee Marble	**27724TFM**	**27723TFM**	**27722TFM**
Twilight Marble	**27724TLM**	**27723TLM**	**27722TLM**
White Bonito	**27724WBO**	**27723WBO**	**27722WBO**
White Frost	**27724WFS**	**27723WFS**	**27722WFS**
Warm Matt Grey	**27724WGM**	**27723WGM**	**27722WGM**
White Gloss	**27724WHT**	**27723WHT**	**27722WHT**

Dimensions

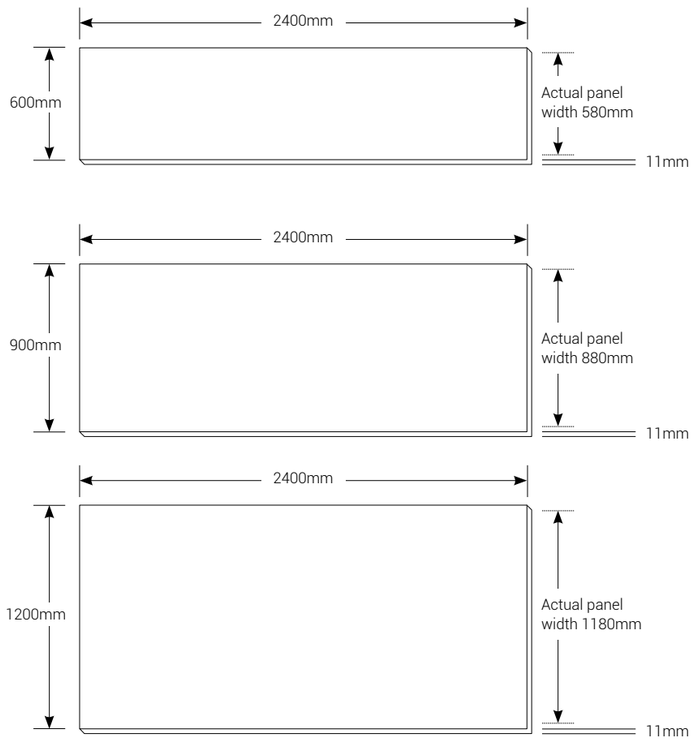

Origins Wall Panels (Dimensions & Profile Types)

Extrusions

(for 11mm panels)	Polished Chrome Aluminium	Silver Anodised	White
End Cap	**27730**	**27719**	**27728**
External Corner	**27731**	**27717**	**27727**
H Section	**27732**	**27718**	**27726**
Internal Corner	**27733**	**27716**	**27725**

Wallboard Bottom onto Vinyl PVC - 3000mm	**27690**
Wallboard Bottom onto Tray PVC - 3000mm	**27689**
Wallboard Bottom onto Tile Alum - 3000mm	**27684**
Multi-Purpose Adhesive	**27729**
Transeal Profile	**27720**

Profile types

2500mm long – available in Chrome, White or SAA (satin anodised aluminium) as standard

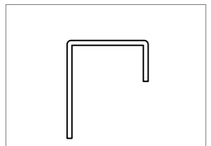

End Cap

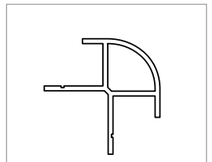

External Corner

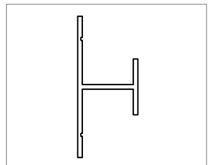

H-section

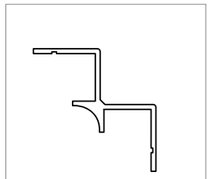

Internal Corner

3000mm long

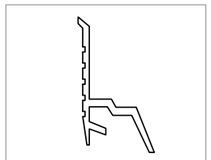

PVC Bottom to Tray Profile

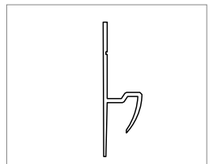

PVC Bottom to Vinyl Profile

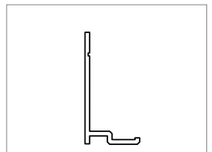

Aluminium Bottom Tile Profile

Shower Niches

AKW shower niches are one-piece shelves constructed from SMC that are designed to be recessed into the wall to create a modern and discrete storage space for all your bathing and showering essentials. Available in three sizes to suit your installation and special requirements, AKW shower niches are perfect for use alongside our range of stylish wall panels or ceramic bathroom tiles. They are incredibly quick to install, making it easy to create extra storage which also offers a highly contemporary aesthetic.

Features & Benefits

- Recess niches into the wall alongside wall panels or tiles for a discrete, integrated finish.
- Lightweight, one-piece construction for quick and easy installation.
- Manufactured from SMC for durability and strength.
- Available in white (all size options) with a glossy finish, or black (full-height options only) with a matt finish, for a bold contemporary look.
- Double and triple shelf, and full height niche options available to suit a variety of user and installation requirements.
- Shelves feature 1–2-degree angled slope which prevents water from collecting and makes it easy to clean.

Specifications

Material: SMC

Weight: 3.8kg (2 shelf), 5.5kg (3 shelf), 9kg (3 shelf full height)

WALLS & SAFETY FLOORING SHOWER NICHES

Product Codes

Shower Niche 3 Shelf Black 1900mm x 356mm	**27800BK-UK**
Shower Niche 3 Shelf White 1900mm x 356mm	**27800WH-UK**
Shower Niche 3 Shelf White 991mm x 406mm	**27801WH-UK**
Shower Niche 2 Shelf White 687mm x 406mm	**27802WH-UK**

LIFETIME WARRANTY

Dimensions

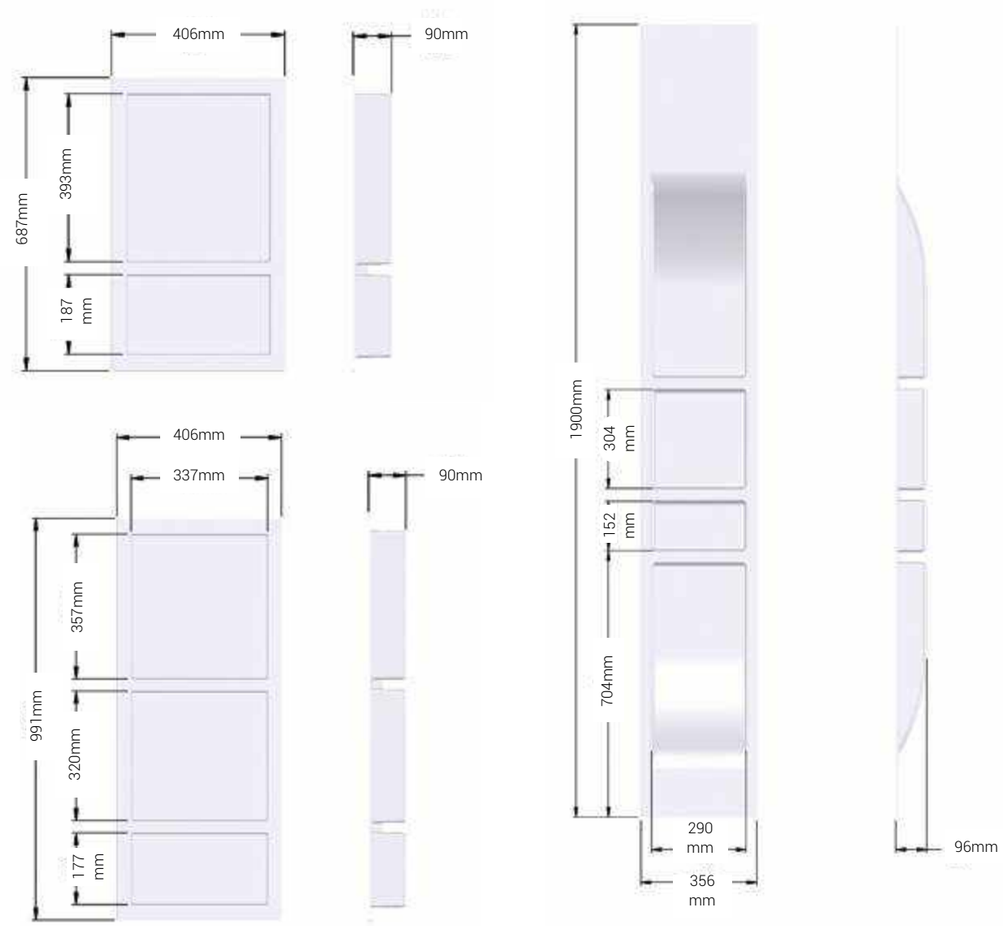

WALLS / FLOOR

Access Panels

AKW's plastic, heavy duty access panels offer a high quality, low cost finish in bathrooms where access to plumbing is required. Available in 3 sizes to allow for maintenance and servicing access to waste pumps and other general plumbing fittings. It is the perfect solution for concealing unsightly controls and fittings that require occasional access.

Access Panels are ideal for accessing pumps, where correctly positioned, in smaller bathrooms where they are fitted into boxing due to limited space.

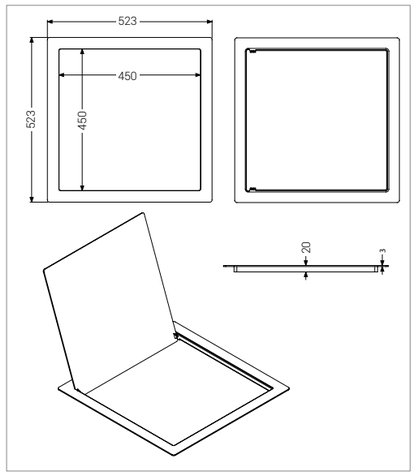

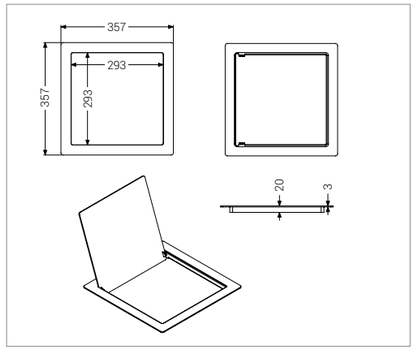

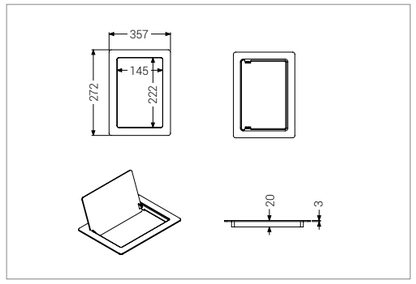

Features & Benefits

+ Quick and easy installation.
+ Versatile in its purpose and can provide easy access to hidden services or as a repair panel in residential and commercial projects.
+ The hinged removable door features a lipped edge which improves operation by allowing the panel to close without being disruptive.
+ Can be decorated, allowing the panel to be integrated into existing decor.

Specification

Thickness: 3mm
Colour: White
Material: ABS Plastic
Usage: Walls & Ceilings
Type: Picture frame
Warranty: 12 months
Water integrity: Panel is not watertight. If there is a directional flow of water at the access panel, additional silicone may be needed.

Product Codes

Access Panel 523 x 523mm	**30200**
Access Panel 357 x 357mm	**30201**
Access Panel 195 x 272mm	**30202**

12 MONTH WARRANTY

Safety Flooring

AKW Safety Flooring comes in a wide range of stylish colours and provides a high level of slip resistance in a bathroom adaptation. 100% watertight, durable and comfortable underfoot, it's ideal for all bathrooms.

Safety Flooring

In a wet room installation, safety flooring is used to provide a slip-resistant surface and a hygienic, safe environment for a wide range of users. AKW safety flooring provides the same level of slip resistance in both wet or dry conditions, regardless of whether the user is wearing shoes or is barefoot.

Features & Benefits

+ 6 dementia-friendly colour options accredited by the Dementia Services Development Centre (DSDC), all achieving the highest rating - Class 1a
+ AKW Safety Flooring has achieved the highest slip-resistance rating for barefoot users in wet and soapy environments
+ Light Reflective Value – range includes plain colours for high contrast in care environments
+ Suitable for users with dementia – with no large speckles in flooring, which can cause confusion
+ Watertight, impervious surface – fully bonded system that liquids cannot penetrate and has nowhere for bacteria to go
+ Easy to clean surface limits limescale build up
+ Long-lasting – provides you with 10 years of guaranteed slip-resistant flooring (if installed to manufacturer specification)
+ PVC floor covering with glass fibre reinforced polyester cellulose backing – allows it to be used with underfloor heating
+ Phthalate free – plasticisers are based on natural resources
+ Cut to order in 0.5m increments x 2m width

10 YEAR WARRANTY

Safety Flooring is non-returnable, because it is cut to order.

Product Codes

Colour	0.5 x 2m	20 x 2m roll
Beige	**21901-BGE**	**21903-BGE**
Cement	**21901-CMT**	**21903-CMT**
Dove	**21901-DVE**	**21903-DVE**
Dusk	**21901-DSK**	**21903-DSK**
Ivory	**21901-IVR**	**21903-IVR**
Wedgewood	**21901-WDW**	**21903-WDW**

Coloured Silicone for Safety Flooring – Ottoseal® S51

Features & Benefits

+ Colour matched with AKW Safety Flooring
+ Flame resistant according to DIN 4102-B1
+ Excellent weathering, ageing and UV-resistance
+ 1-component silicone sealant based on aminoxime
+ MEKO Free (safer working non-toxic)

Product Code

Coloured Silicone for Safety Flooring – Ottoseal® S51	**21900**

Ottoseal S51 Flash Grey for Cement flooring
21900FGR

Ottoseal S51 Agate Grey for Dove flooring
21900AGR

Ottoseal S51 Sahara for Ivory flooring
21900SHR

Ottoseal S51 Cream Beige for Beige flooring
21900CBG

Ottoseal S51 Pastel Blue for Wedgewood flooring
21900PBL

Ottoseal S51 Brilliant Blue for Dusk flooring
21900BBU

Flooring Weld Rod

Features & Benefits

+ Watertight and hygienic seam
+ Range of colours available either matching to floor colour or contrasting for an artistic touch
+ Solidified adhesive in rod application to easily melt into grooves and cuts to seal safety flooring
+ Available in 1m lengths cut to order or 100m rolls

Product Codes

Colour	1m length	100m roll
Beige	**21902-BGE**	**21904-BGE**
Cement	**21902-CMT**	**21904-CMT**
Dove	**21902-DVE**	**21904-DVE**
Dusk	**21902-DSK**	**21904-DSK**
Ivory	**21902-IVR**	**21904-IVR**
Wedgewood	**21902-WDW**	**21904-WDW**

F44 Styccobond Adhesive

Features & Benefits

+ Strong initial tack
+ Long initial open time
+ Solvent free
+ Protected against bio-degeneration
+ Suitable for use with underfloor heating

Product Code

F44 Flooring Adhesive 5L (20m²)	**21897**

F66 Styccobond Solvent Free Contact Adhesive

Features & Benefits

+ Solvent free, low odour adhesive
+ Easy to apply with a notched spreader or sponge applicator
+ Instant bond
+ Good drying characteristics within 30 minutes
+ Coverage 5sqm per litre with spreader or 9sqm with sponge

Product Code

F66 Contact Adhesive, Solvent Free 5L	**30128**

Bond-it Levelling Floor Compound

Features & Benefits

+ Self levelling – mix with water or latex liquid
+ Accepts floor traffic after 3-4 hours (depending on site conditions)
+ An easy-to-use pre-blended single pack ready to mix
+ Coverage – 20kg bag will cover approximately 3.6sqm at a depth of 3mm

Product Code

Bond-it Levelmaster Floor Compound 20KG	**21896**

Bond-it Latex Liquid

Features & Benefits

+ 1:1 Mix ratio. For every 20kg pack of Levelmaster use 1 container of Latex Liquid
+ 24 month shelf life
+ Levelling compound/latex mix sets in 24 hours (depending on site conditions)

Product Code

Bond-it Latex Liquid 4.5L	**21895**

Flooring Capping Strip

Features & Benefits

+ High-quality, flexible PVC extrusion
+ Available in white
+ Easy to install, cut and handle on site
+ Clean finish when flooring is coved up a wall
+ Adds a water-resistant barrier to the edge of the flooring

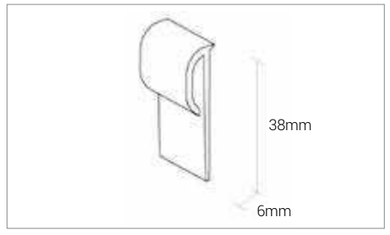

Product Code

Flooring Flexible White PVC Capping Strip – 2m	**21898WHT**

3m Vinyl Flooring Coving

Features & Benefits

+ Provides a preformed radius for flooring installation
+ Installing the coving and dressing the flooring up the wall provides an end solution that is easy to clean
+ Colour: Black

Product Code

Pack of 5 x 3m lengths	**30085**

Flooring Threshold Strip

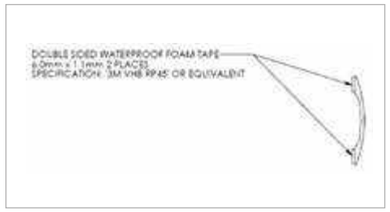

Features & Benefits

+ Water resistant
+ Self-adhesive, waterproof foam tape
+ Enables level access
+ Silver, smooth finishing

Product Code

Flooring threshold strip – 950mm length	**27695**

Safety Flooring to Wall Trim with Flexible Lip

Features & Benefits

+ Provides smooth transition between tiles and vinyl flooring
+ High-quality, PVC extrusion, designed to give a clean finish when flooring is coved up a wall
+ Flexible lip provides additional ease during installation process
+ PVC material is easy to cut and handle on site

Product Code

Pack of 1 x 3m lengths	**21905**

CLS Timber 3"x 2"

Features & Benefits

+ Easy to cut and fit
+ Softwood planed with rounded edges
+ Ideal for interior framing, support and carcassing
+ Robust – provides stability and reliability
+ Strength graded to C16 specification
+ Treated timber is treated with tanalith

Product Codes

Untreated Timber 76mm (3in) x 50mm (2in) x 2400mm (96in)	**21886**
Treated Timber 76mm (3in) x 50mm (2in) x 2400mm (96in)	**21887**

Please note The CLS finished size is 63mm(w) x 38mm(h)

Mobility Support

Grab Rails 331

Heavy Duty Grab Rails 332
Plastic Grab Rail 334
Stainless Steel Grab Rails 338
Onyx 2 Grab Rails 344
T-Shaped Grab Rails 349
Hand Rails 349
Floor-to-Ceiling Support Poles 350
Fold-Up Rails 351
Floor Mounted Pillar for Fold-Up Rail 353
Wave Grab Rail 354
Arch Grab Rail 355
Grab-a-Rail 356

Shower Seats 359

Fold-Up Shower Seats 360
4000 Series Shower Seats 360
3000 Series Shower Seats 369
2000 Series Shower Seats 370
1000 Series Shower Seats 373
Onyx Shower Seats 374
Bama Shower Seats 377
Hanging Shower Seats 378
Freestanding Shower Seats 379
Wooden Shower Seats 380

Mobility Ramps 383

Threshold Ramps 384
Standard Ramps 385

Grab Rails

Our range of grab rails offers a wide variety of styles to ensure the appropriate level of support.

1900 Series Straight Heavy Duty Grab Rails

Reinforced with an aluminium tubular core for greater strength.

Features & Benefits

+ Choice of five fixing points for optimum wall fixing providing added strength and security
+ Fluted surface gives additional grip especially when hands are wet
+ Colour options available in white or blue designed to create contrast for users with visual impairment
+ Easy installation as no electrical earthing is required
+ Reinforced aluminium tubular core for greater strength
+ 38mm rail-to-wall clearance allows for easier grip for the users with limited dexterity to support themselves

Specifications

Tested to a maximum load of 30 stone / 190kg**
Diameter: 32mm
Cannot be trimmed
Made from extruded plastic uPVC

Product Codes

305mm Heavy Duty Grab Rail	**01900WH/BU***
407mm Heavy Duty Grab Rail	**01905WH/BU***
457mm Heavy Duty Grab Rail	**01910WH/BU***
610mm Heavy Duty Grab Rail	**01920WH/BU***
813mm Heavy Duty Grab Rail	**01930WH/BU***
914mm Heavy Duty Grab Rail	**01940WH/BU***

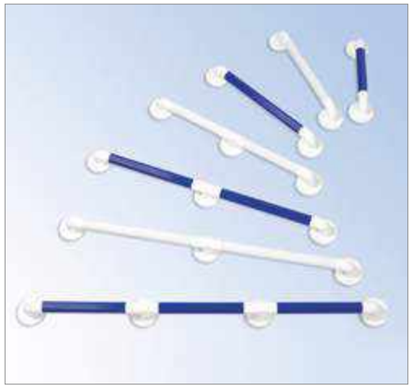

Dimensions (mm)

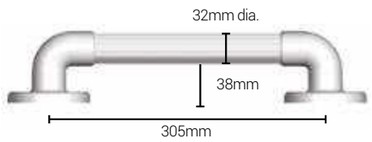

305mm Rail

Registered Design: EU0000692249-0001

**Maximum weight capacity refers to the grab rail only, not the user weight, fixings or retention in the mounting surface.

*WH/BU in the product code denotes whether the rail is White or Blue.

Available individually.

305 - 457mm available in boxes of 20.

610 - 1067mm available in boxes of 10.

1900 Series Angled Heavy Duty Grab Rails

Features & Benefits

+ 90° and 135° angle grab rails are available to suit user preference
+ A 38mm rail-to-wall clearance allows for easier grip for the users with limited dexterity to support themselves
+ Fluted surface gives additional grip especially when hands are wet
+ Colour options available in white or blue designed to create contrast for users with visual impairment
+ Easy installation as no electrical earthing is required
+ Versatile option as these grab rails are trimmable

Specifications

Tested to a maximum load of 30 stone / 190kg**
Diameter: 32mm
Made from extruded plastic uPVC

Product Codes

610x610mm Heavy Duty Grab Rail (90° Angle)	**01925WH***
455x455mm Heavy Duty Grab Rail (135° Angle)	**01915WH/BU***

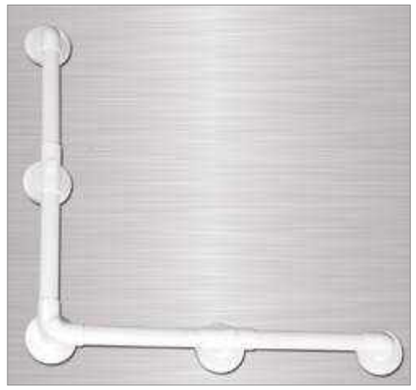

Available individually or in boxes of 10.

*WH/BU in the product code denotes whether the rail is White or Blue.

Registered design: EU0000692249-0001

1600 Series Straight Natural Grip Plastic Grab Rails

Features & Benefits

+ Unique 'warm feel' polypropylene for comfort
+ Reinforced with a stainless steel (rust proof) core for added strength
+ Ergonomically designed with a distinctive grip that is comfortable and easy to grip
+ A 46mm rail-to-wall clearance allows for easier grip for the users with limited dexterity to support themselves
+ Colour options available in white, grey or blue designed to create contrast for users with visual impairment
+ Easy installation as no electrical earthing is required
+ Includes five fixing points for optimal strength and security

Specifications

Tested to a maximum load of 19.5 stone / 125kg**
Core material: Stainless steel
Outer material: Polypropylene

Product Codes

300mm Natural Grip Grab Rail (32mm Diameter, Straight)	**01600WH/BU***
300mm Natural Grip Grab Rail (35mm Diameter, Straight)	**01650WH/BU***
450mm Natural Grip Grab Rail (32mm Diameter, Straight)	**01610WH/BU***
450mm Natural Grip Grab Rail (35mm Diameter, Straight)	**01660WH/BU***
600mm Natural Grip Grab Rail (32mm Diameter, Straight)	**01620WH/BU***
600mm Natural Grip Grab Rail (35mm Diameter, Straight)	**01670WH/BU***

i Five fixing points

*WH/BU in the product code denotes whether the rail is White or Blue.

**Maximum weight capacity refers to the grab rail only, not the user weight, fixings or retention in the mounting surface.

Available individually.
300mm & 450mm available in box of 25.
600mm available in box of 20.

1600 Series Angled Natural Grip Plastic Grab Rails

Features & Benefits

+ Unique 'warm feel' polypropylene for comfort
+ Reinforced with a stainless steel (rust proof) core for added strength
+ Ergonomically designed with a distinctive grip that is comfortable and easy to grip
+ A 46mm rail-to-wall clearance allows for easier grip for the users with limited dexterity to support themselves
+ Colour options available in white, grey or blue designed to create contrast for users with visual impairment
+ Easy installation as no electrical earthing is required
+ Includes five fixing points for optimal strength and security

135° Natural Grip Grab Rail (Blue)

Available individually or in boxes of 12.

*WH/BU in the product code denotes whether the rail is White or Blue.

Specifications

Tested to a maximum load of 19.5 stone / 125kg**
Core material: Stainless steel
Outer material: Polypropylene

Product Codes

600x600mm Natural Grip Grab Rail (32mm Diameter, 90° Angled)	**01630WH/BU***
450x450mm Natural Grip Grab Rail (32mm Diameter, 135° Angled)	**01640WH/BU***
450x450mm Natural Grip Grab Rail (35mm diameter, 135° Angled)	**01690WH/BU***

1400 Series Straight Plastic Grab Rails

Features & Benefits

- Five fixing points for optimum wall fixing provides added strength and security
- A 59mm rail-to-wall clearance allows for easier grip for the users with limited dexterity to support themselves
- Fluted surface gives additional grip especially when hands are wet
- Colour options available in white, blue, yellow or mid-grey specifically designed for the visually impaired
- No electrical earthing is required
- High quality uPVC provides durability and longevity
- Multi-purpose suitable for use throughout the home

Specifications

Tested to a maximum load of 15.5 stone / 100kg**
Diameter: 32mm
Suitable for internal use
Made from high-quality uPVC

Product Codes

300mm Straight Plastic Rail	**01400WH/BU/MG/DB***
450mm Straight Plastic Rail	**01410WH/BU/MG/DB***
600mm Straight Plastic Rail	**01420WH/BU/MG/DB***

Available individually.
300mm & 450mm available in box of 25.
600mm available in box of 20.

*WH/BU/MG/DB denotes the colour of the rail. WH is White; BU is Blue; MG is Mid-Grey and DB is Dark Blue.

1400 Series Angled Plastic Grab Rails

Features & Benefits

- 90° and 135° angle grab rails are available to suit user preference
- Five fixing points for optimum wall fixing provides added strength and security
- A 59mm rail-to-wall clearance allows for easier grip for the users with limited dexterity to support themselves
- Fluted surface gives additional grip especially when hands are wet
- Colour options available in white, blue or yellow specifically designed for the visually impaired
- No electrical earthing is required
- High quality uPVC provides durability and longevity
- Multi-purpose suitable for use throughout the home

90° Plastic Grab Rail (Blue)

135° Plastic Grab Rail (Blue)

Specifications

Tested to a maximum load of 15.5 stone / 100kg**
Diameter: 32mm
Suitable for internal use
Made from high-quality uPVC

Product Codes

600x600mm Angled Plastic Grab Rail (90°)	**01430WH/BU***
450x450mm Angled Plastic Grab Rail (135°)	**01440WH/BU***

Available individually or in boxes of 10.

*WH/BU in the product code denotes whether the rail is White or Blue.

Stainless Steel Straight Grab Rails

Features & Benefits

- Three fixing points provides a secure fitting and added strength
- 56mm rail to wall clearance allows for easier grip for the users with limited dexterity to support themselves
- High grade stainless steel provides longevity
- Polished finish improves the aesthetics of the bathroom

Specifications

Material: high-grade stainless steel

Diameter: 32mm

Tested to a maximum load of 23.5 stone / 150kg

Product Codes

300mm Stainless Steel Straight Grab Rail	**01230**
450mm Stainless Steel Straight Grab Rail	**01231**
600mm Stainless Steel Straight Grab Rail	**01232**

Available individually or in boxes of 10.

Epoxy Coated Stainless Steel Straight Grab Rail

Features & Benefits

- Available in white or mid-grey to suit user preference
- Three fixing points provides a secure fitting and added strength
- Lifetime warranty gives peace of mind
- 56mm rail to wall clearance allows for easier grip for the users with limited dexterity to support themselves
- Smooth surface make is easy to clean
- Captive flange covers to conceal fixings and improve aesthetics

Specification

Tested to a maximum load of 23.5 stone / 150kg*

Product Codes

300mm Mid Grey SS Grab Rail	**01240MG**
450mm Mid Grey SS Grab Rail	**01241MG**
600mm Mid Grey SS Grab Rail	**01242MG**
300mm Dark Blue SS Grab Rail	**01240DB**
450mm Dark Blue SS Grab Rail	**01241DB**
600mm Dark Blue SS Grab Rail	**01242DB**
300mm White SS Grab Rail	**01240WH**
450mm White SS Grab Rail	**01241WH**
600mm White SS Grab Rail	**01242WH**

Available individually or in boxes of 10.

*Maximum weight capacity refers to the grab rail only, not the user weight, fixings or retention in the mounting surface.

1200 Series Flat End Straight Stainless Steel Grab Rails

Features & Benefits

+ Flat-ended for flush installation creating an unobtrusive support
+ Versatile application for use indoors or outdoors
+ Available in white or brown to provide discrete external appearance
+ A 43mm rail-to-wall clearance allows for easier grip for the users with limited dexterity to support themselves
+ Two-hole fixings on each end for secure fitting
+ Lifetime warranty on stainless-steel for peace of mind

Specifications

Material: stainless-steel tubular grab rail
ASTM B117-87 96-hour salt spray tested
Finish: polyester epoxy powder coating
Diameter: 25mm

Product Codes

305mm Flat End Steel Grab Rail	**01200WH/BR***
445mm Flat End Steel Grab Rail	**01210WH***
610mm Flat End Steel Grab Rail	**01220WH/BR***

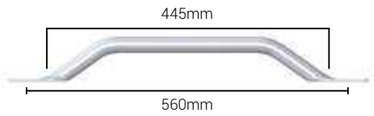

445mm Flat End Grab Rail

Available individually.
305mm & 445mm available in box of 50.
610mm available in box of 20.

*WH/BU in the product code denotes whether the rail is White or Blue.

GRABS/SEATS

1000 Series Flat End Straight Mild Steel Grab Rails

Features & Benefits

+ Flat-ended for flush installation creating an unobtrusive support
+ Versatile application for use indoors or outdoors
+ Available in white or brown to provide discrete external appearance
+ A 43mm rail-to-wall clearance and 1.2mm wall thickness allows for easier grip for the users with limited dexterity to support themselves
+ Two-hole fixings on each end for secure fitting
+ Coating process includes rust inhibitor treatment increasing longevity

Specifications

Material: stainless-steel tubular grab rail with 1.2mm wall thickness
ASTM B117-87 96-hour salt spray tested
Finish: polyester epoxy powder coating
Diameter: 25mm

Product Codes

305mm Flat End Steel Grab Rail	**01000E**
445mm Flat End Steel Grab Rail	**01010E**
610mm Flat End Steel Grab Rail	**01020E**

Available individually.
305mm & 445mm sold in box of 50.
610mm sold in box of 20.

GRABS/SEATS

1700 Series Flat End Cranked Steel Grab Rails

Features & Benefits

+ Offset design allows the user to step up to and through the doorway without releasing the grip
+ Spacious design avoids hand grazing
+ White rail is manufactured from a longer lasting cold drawn mild steel tube
+ Brown rail is manufactured from stainless steel (201 grade)
+ Versatile application suitable for all internal applications, except for bath and shower rooms
+ Powder coated finishing process includes rust inhibitor treatment increasing longevity

Available individually.
445mm sold in box of 20.
630mm sold in box of 35.

Specification

Diameter: 26.7mm

Product Codes

445mm Stainless Steel Grab Rail White	**01760**
445mm Stainless Steel Grab Rail Brown	**01770**
630mm Stainless Steel Grab Rail White	**01750**

Onyx 2

Introducing our versatile Onyx 2 grab rails. These products are part of the Onyx range which offers a synergy of finishes and styles throughout the whole range.

The Onyx 2 grab rails are available in chrome and white as standard. They can then be tailored to your own requirements with a choice of interchangeable wall bracket covers, which can be ordered separately.

The Onyx 2 Grab Rails range includes the following options:

+ Straight 300mm grab rail
+ Straight 450mm grab rail
+ Straight 600mm grab rail
+ T&L grab rail:
  + The vertical rail can be moved along the horizontal rail to create either a T or L shape. When desired position is defined by the customer, simply fix the two grab rails together - fixed via screw underneath for discreteness.
  + T&L grab rail is supplied with: soap shelf, handset slider and an additional handset holder on the horizontal grab rail.

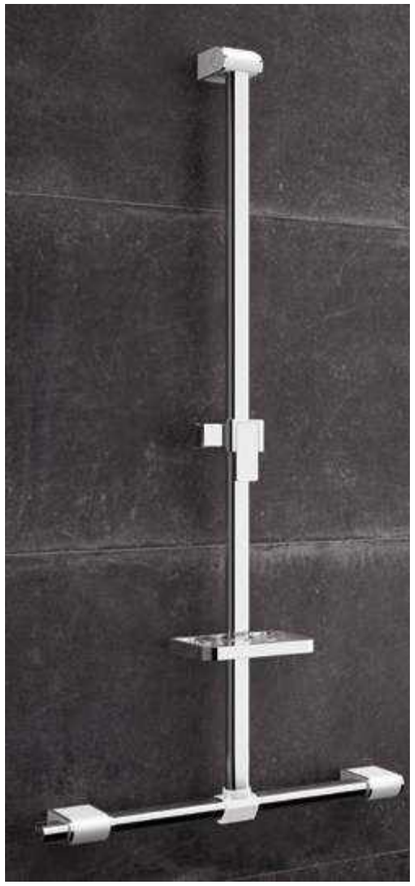

Interchangeable Wall Bracket Covers (Colour Options, Product Codes & Dimensions)

	Onyx 2 Pair of interchangeable covers		Onyx 2 135º angled interchangeable cover	
Colour Option	**Code**	**RAL**	**Code**	**RAL**
Black	12806BK-LS	RAL7021	12807BK-LS	RAL7021
Teal	12806TE-LS	RAL5020	12807TE-LS	RAL5020
Grey Pearl	12806GP-LS	RAL7035	12807GP-LS	RAL7035
Taupe	12806TP-LS	RAL7006	12807TP-LS	RAL7006
White	12806WH-LS	RAL9003	12807WH-LS	RAL9003
Beige	12806BG-LS	RAL1015	12807BG-LS	RAL1015
Light Wood	12808LW-LS	–	12809LW-LS	
Dark Wood	12808DW-LS	–	12809DW-LS	
Carbon	12808CR-LS	–	12809CR-LS	
Child Print	12808CH-LS	–	12809CH-LS	

Onyx 2 Straight Grab Rail

Features & Benefits

- Minimalist, contemporary design reflecting the latest trends in industrial design
- Interchangeable wall bracket covers offer customer personalisation, available in 5 different colours and 4 different printed finishes
- An ergonomic triangular rail offers a greater ability to grip the rail
- Grab rails maximum weight load of 150kg/24st offering strength and stability when the user needs it most
- Safe and secure and easy to install with 4 fixing points per bracket
- Durable, safe and designed to withstand everyday use
- Modern design is not compromised by invisible fixing points
- Lifetime warranty provides users peace of mind
- Handset Holder is available as an optional extra

Specifications

Chrome tube
White wall brackets' covers supplied as standard
Plain colour finishes are matt
AKW branding on end caps - chrome finish
Materials:
Aluminium alloy rails
Die cast aluminium alloy wall brackets and ABS covers
SS washers and bolts
Maximum weight load: Straight grab rail: 150kg /24stone
Fixing points: 4 per bracket
Wall clearance: 38mm
Rail cross section dimensions: 40.5 x 32 mm (W x H)

Product Codes

Onyx 2 straight grab rail chrome & white 300mm	**12801-LS**
Onyx 2 straight grab rail chrome & white 450mm	**12802-LS**
Onyx 2 straight grab rail chrome & white 600mm	**12803-LS**
Onyx 2 - Handset holder	**12810-LS**

LIFETIME WARRANTY

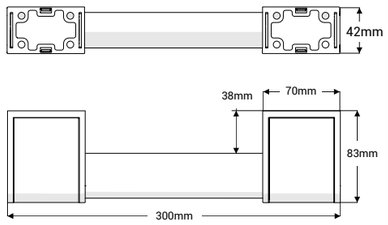

Straight 300mm Grab Rail

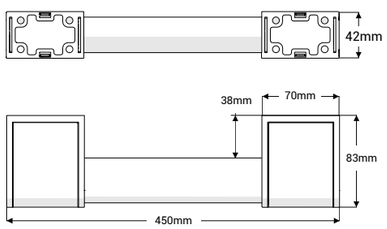

Straight 450mm Grab Rail

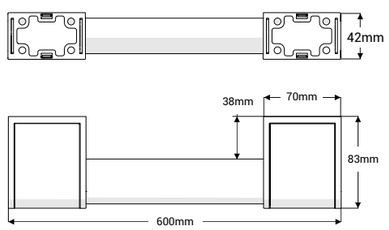

Straight 600mm Grab Rail

Onyx 2 135 Angled Grab Rail

Features & Benefits

- Minimalist, contemporary design reflecting the latest trends in industrial design
- Interchangeable wall bracket covers offer customer personalisation, available in 5 different colours and 4 different printed finishes
- An ergonomic triangular rail offers a greater ability to grip the rail
- Grab rails maximum weight load of 150kg/24st offering strength and stability when the user needs it most
- Safe and secure and easy to install with 4 fixing points per bracket
- Durable, safe and designed to withstand everyday use
- Modern design is not compromised by invisible fixing points
- Lifetime warranty provides users peace of mind
- Handset Holder is available as an optional extra

Specifications

Chrome tube
White wall brackets' covers supplied as standard
Plain colour finishes are matt
AKW branding on end caps - chrome finish
Materials:
Aluminium alloy rails
Die cast aluminium alloy wall brackets and ABS covers
SS washers and bolts
Maximum weight load: Straight grab rail: 150kg /24stone
Fixing points: 4 per bracket
Wall clearance: 38mm
Rail cross section dimensions: 40.5 x 32 mm (W x H)

Product Codes

Onyx 2 135° Angled Grab Rail Chrome & White 400x400mm	**12804-LS**

LIFETIME WARRANTY

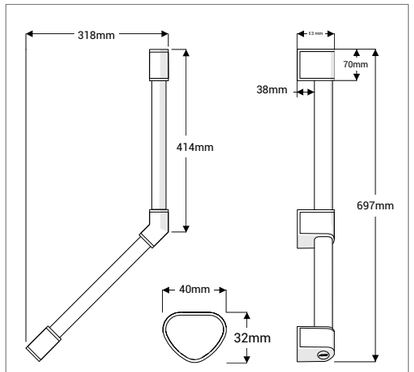

135° Angled Grab Rail

Onyx 2 T & L Shaped Grab Rail

Features & Benefits

+ Minimalist, contemporary design reflecting the latest trends in industrial design
+ Interchangeable wall bracket covers offer customer personalisation, available in 5 different colours and 4 different printed finishes
+ An ergonomic triangular rail offers a greater ability to grip the rail
+ Grab rails maximum weight load of 100kg /16st (vertical rail) and 150kg /24st (horizontal rail) offering strength and stability when the user needs it most
+ Handset slider (T&L grab rails) are flexible, they can be fitted to the left or right depending on the customer preference
+ Safe and secure and easy to install with 4 fixing points per bracket
+ Durable, safe and designed to withstand everyday use
+ Modern design is not compromised by invisible fixing points
+ Lifetime warranty provides users peace of mind

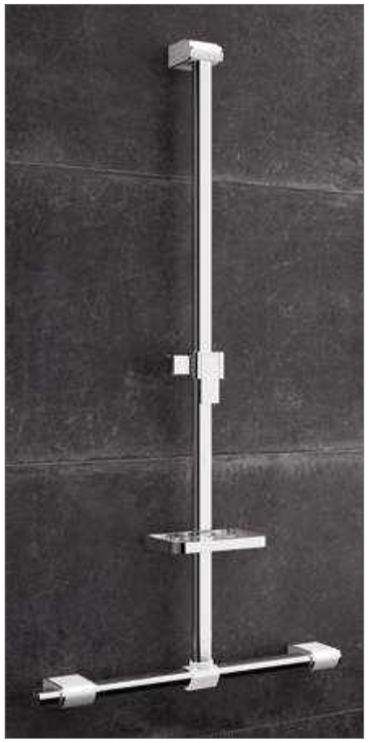

Specifications

Chrome tube
White wall brackets' covers supplied as standard
Plain colour finishes are matt
AKW branding on end caps - chrome finish
Materials:
Aluminium alloy rails
Die cast aluminium alloy wall brackets and ABS covers
SS washers and bolts
ABS handset holder and soap shelf
ABS handset slider
Maximum weight load: Horizontal rail: 150kg /24stone, Vertical rail 100kg/16stone
Fixing points: 4 per bracket
Wall clearance: 38mm
Rail cross section dimensions: 40.5 x 32 mm (W x H)

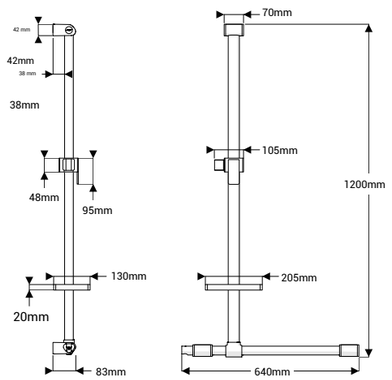

T & L shaped grab rail

Product Codes

Onyx 2 T & L shaped grab rail chrome & white	**12805-LS**
Onyx 2 T & L shaped grab rail chrome & black	**12805BK-LS**
Onyx 2 - Handset holder	**12810-LS**
Onyx 2 - Slider	**12817-LS**

T-Shape SS Epoxy Coated Grab Rail

Features & Benefits

+ T-shape grab rail
+ 1200x300x300mm
+ Available in white
+ Stainless steel epoxy resin coated

Product Code

T-Shaped SS Epoxy Coated Grab Rail	**01246WH**

Newel Hand Rail

Features & Benefits

+ 90° turn around the newel post provides additional grip for safety while using the stairs
+ Finishing process includes rust inhibitor treatment provides durability and longevity
+ Three-hole fixing flange for a safe and secure installation
+ Available left or right-handed to accommodates both left and right bannisters

Specifications

Diameter: 32mm
Length: 707mm
Made from cold-drawn, mild steel tube
Tested to ASTM B117-87 salt spray test
White, epoxy resin coated

Product Code

Newel Hand Rail White	**01745L/R**

L/R in the product code denotes whether the rail is Left or Right handed.

Floor-to-Ceiling Support Pole

Features & Benefits

+ Can be trimmed to length to accommodate various ceiling heights
+ Three fixing points provides a secure fitting and added strength
+ Ribbed PVC pole provides durability and user comfort

Specifications

Diameter: 37mm
Length: 2750mm
Material Inner: mild steel
Material outer: ribbed PVC
Fixing plates: Finish: polyester epoxy powder coating

Product Code

Floor-to-Ceiling Support Pole	**01720**

Floor-to-Ceiling Support Pole with Stay

Features & Benefits

+ Can be trimmed to length to accommodate various ceiling heights
+ Three fixing points provides a secure fitting and added strength
+ Ribbed PVC pole provides durability and user comfort

Specifications

Diameter: 37mm
Length: 2750mm
Material Inner: mild steel
Material outer: ribbed PVC
Fixing plates: Finish: polyester epoxy powder coating

Product Code

Floor-to-Ceiling Support Pole with Stay	**01730**

Fold-Up Double Support Rail

Features & Benefits

+ Available in white or blue for users with impaired vision
+ Supplied with optional fit toilet roll holder to suit user requirements
+ Provides support in multi-user bathrooms
+ Ideal when space is limited as it folds neatly back to the wall to maximise space
+ Accommodates user-specific height requirements
+ Tested to a maximum load of 15.5 stone / 100kg**

Product Code

Fold-Up Double Support Rail	**01810WH/BU**
Spare toilet roll holder code	**07206**
Hinged Fold-Up Double Hairpin Rail (32mm) SS	**01811SS-LS**

Dimensions

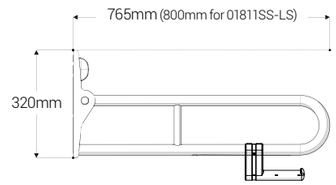

Fold-Up Double Support Rail with Leg

Features & Benefits

+ Available in white or blue for users with impaired vision
+ Supporting leg gives additional strength and stability
+ Supplied with optional fit toilet roll holder to suit user requirements
+ Provides support in multi-user bathrooms
+ Ideal when space is limited as it folds neatly back to the wall to maximise space
+ Accommodates user-specific height requirements as support leg is trimmable
+ Accommodates user-specific height requirements

Product Code

Fold-Up Double Support Rail with Leg	**01820WH/BU***

Height to top of rail: 680mm. Tested to a maximum load of 30 stone / 200kg**

*WH/BU in the product code denotes whether the rail is White or Blue.

**Maximum weight capacity refers to the grab rail only, not the user weight, fixings or retention in the mounting surface.

Dimensions

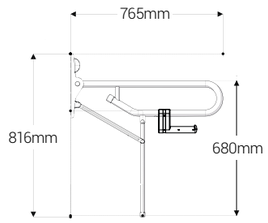

1800 Series Fold-Up Rail with Adjustable Leg

Features & Benefits

+ Strong design for additional support
+ Folds neatly back to the wall to maximise space making it ideal for use in multi-user bathrooms
+ Epoxy resin coating and rust inhibitor treatment ensures durability
+ Supplied with optional fit toilet roll holder to suit user requirements
+ Available in blue to create a contrast for users with impaired vision

Supplied with optional toilet roll holder

Specifications

Made from 32mm diameter steel projecting 765mm from wall
Tested to ASTM B117-87 salt spray test
Tested to a maximum load of 30 stone / 200kg

Product Codes

1800 Series Blue Fold-Up Rail	**01830BU**
1800 Series Mid Grey Fold-up Rail	**01830MG**
Fold-Up Double Support Rail White (with Adjustable Leg)	**01830WH**
Stainless Steel Fold-Up Rail (with Adjustable Leg)	**01830SS**
1800 Series Dark Blue Fold-Up Rail	**01830DB**

Dimensions

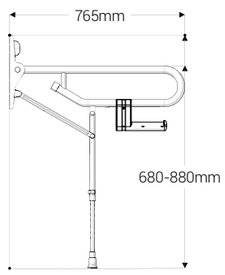

Floor Mounted Pillar for Fold-Up Rails (excluding rail)

Features & Benefits

+ White powder coated mild steel floor mounted support
+ Height: 1005mm (to allow the maximum adjustment for the 01830 (WH/SS/BY) rails of 880mm)
+ The fold-up rails can be fixed at different heights
+ To support the maximum load of fold-up rails without leg of 100kg and with leg of 200kg
+ Easy cleaning
+ Compatible with all the current AKW fold-up rails with and without a leg
+ The fold-up rails can be fixed at different heights
+ Ease the installation of a grab rail if the product cannot be fix directly to the wall (asbestos, windows, plasterboard.)

Specifications

Construction materials: Powder Coated Mild Steel
Supports the maximum load of fold-up rails without leg of 100kg and with leg of 200kg
Dimensions: H 1005 mm x L 110mm x W 210mm
The fold-up rail can be install at different heights

Product Code

Free Standing Pillar for Fold-up Rail	**01802**

12 MONTH WARRANTY

Wave Grab Rail

Stainless steel grab rails enhance safety & help reduce the risk of slips and falls whilst getting into and out of the shower. Ergonomically shaped Wave grab rails offer a more natural grip as well as being pleasing on the eye. Wall fixings not supplied.

Stainless steel grab rails are manufactured from 35mm stainless steel and are easy to grip as well as simple to clean.

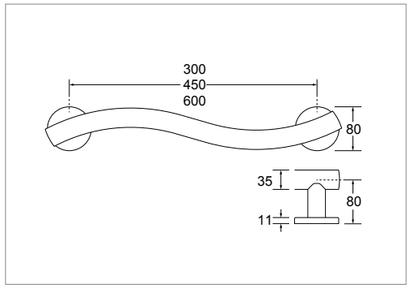

Features & Benefits

+ Wave shape helps user to apply extra leverage to assist them to stand
+ Available sizes: 300, 450 & 600mm
+ Stylish, low profile cover plates conceal wall fixings
+ Left or right hand available
+ 10 year guarantee

Product Code	
300mm, left	**03SS-GRW300L**
300mm, right	**03SS-GRW300R**
450mm, left	**03SS-GRW450L**
450mm, right	**03SS-GRW450R**
600mm, left	**03SS-GRW600L**
600mm, right	**03SS-GRW600R**

Arch Grab Rail

Stainless steel grab rails enhance safety & help reduce the risk of slips and falls whilst getting into and out of the shower. Ergonomically shaped Arch grab rails offer a more natural grip as well as being pleasing on the eye. Wall fixings not supplied.

Stainless steel grab rails are manufactured from 35mm stainless steel and are easy to grip as well as simple to clean.

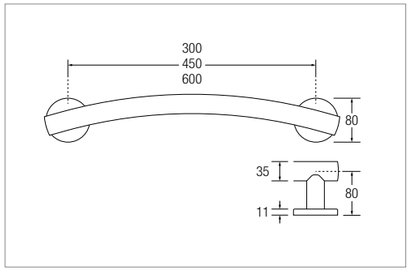

Features & Benefits

+ Provide a stylish stability aid in the bathroom when entering or exiting the shower
+ Arch shape helps user to apply extra leverage to assist them to stand
+ Available size: 300mm & 600mm
+ Stylish, low profile cover plates conceal the wall fixings
+ 10 year guarantee

Product Code	
300mm	**03SS-GRA300**
450mm	**03SS-GRA450**
600mm	**03SS-GRA600**

Grab-a-Rail

Grab-a-Rail is the new, lightweight kitchen support rail system that can help prevent slips and falls in the home, designed to give users increased independence and reduce the risk of falls when navigating the kitchen space.

Features & Benefits

- Grab-a-Rail increases user independence and reduces their risk of falls when navigating the kitchen space
- Tested to a maximum weight load of 15.5 stone / 100kg
- Quick and easy to install
- Supplied in 2 sizes of 600mm and 1000mm. The 1000mm can be trimmed down to 810mm and the 600mm can be trimmed down to 450mm
- Lifetime warranty for peace of mind
- Minimalist design, supplied in white to compliment any kitchen
- Optional left and right-handed returns are available, which are a useful feature to prevent items catching on the end/corners of the Grab-a-Rail
- Safe and secure fixing points, four fixing points per bracket for a secure installation
- Offers flexibility to accommodate the customers desired fitting requirements
- End-returns can be purchased individually in left or right-handed options
- Durable, safe and designed to withstand everyday use
- Grab-a-Rail can be fitted to a minimum worktop thickness of 28mm, however if fitting into routered channels in the underside of the worktop the minimum thickness is 32mm
- Can be fitted to new AKW kitchens or retro-fitted into existing kitchens with different options of install available based on the installation of the units

Optional left and right-handed returns

Product Code

Grab-A-Rail White 600mm	**GAR600WH**
Grab-A-Rail White 1000mm	**GAR1000WH**
Grab-A-Rail End Return White LH	**GARRTNWHL**
Grab-A-Rail End Return White RH	**GARRTNWHR**

MOBILITY SUPPORT GRAB RAILS

Dimensions - 600mm Grab-a-Rail (mm)

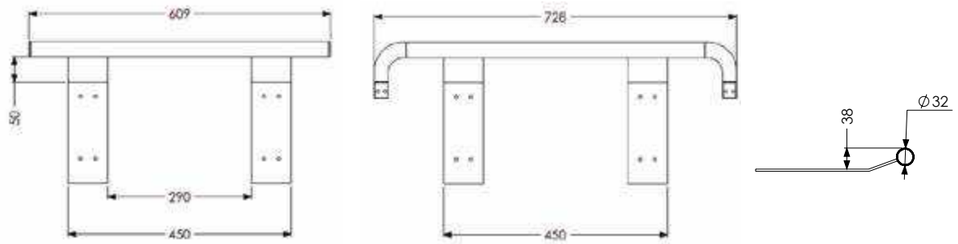

Dimensions excluding end-return

Dimensions including end-returns

Dimensions - 600mm Grab-a-Rail (mm)

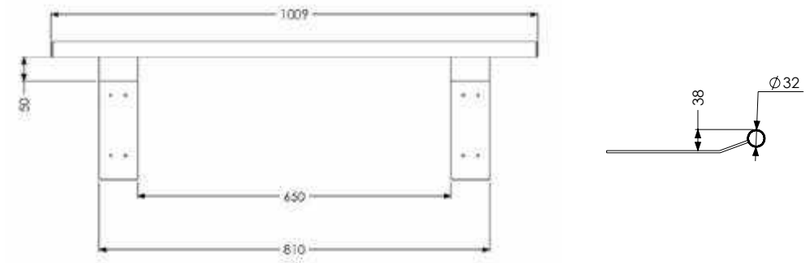

Dimensions excluding end-returns

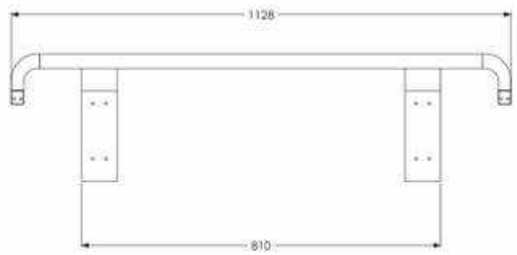

Dimensions including end-returns

GRABS/ SEATS

Shower Seats

AKW offers a wide range of shower seats which have been developed in consultation with occupational therapists, end users and installers to ensure functionality and safety without a compromise in style.

4000 Series Standard Fold-Up Shower Seat – 40 Stone Stainless Steel

4000 Series shower seats have been designed to accommodate a variety of individual needs, with options including backrests, padded arms and adjustable legs.

Features & Benefits

- Designed in consultation with occupational therapists, end users and installers to accommodate a variety of individual needs
- Adjustable for comfort, at the point of installation, to accommodate clients' needs, with seat heights of between 390–640mm (provided by two sets of leg height supplied as standard)
- Sturdy design, carries weight up to 40 stone / 254kg
- +/– 13mm fine adjustment to foot or support leg to allow for gradient in floor to optimise comfort on a level seating
- Unique and innovative design will give years of trouble-free service
- Made from rust-proof stainless steel ensures durability for long-term use
- Available in white, or high-contrast colour options, in grey or blue padded seat for users with visual impairment
- Lifetime guarantee provides peace of mind

Product Codes

Standard Shower Seat White	**04070**
Standard Shower Seat Blue Padded	**04070P**
Standard Shower Seat Grey Padded	**04270P**
Spare Seat Cushion Blue	**04170**
Spare Seat Cushion Grey	**04270**

Dimensions (mm)

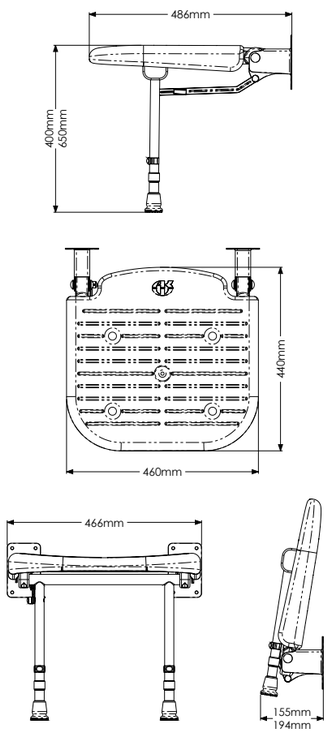

LIFETIME WARRANTY

4000 Series Extra-Wide Fold-Up Shower Seat – 40 Stone Stainless Steel

Features & Benefits

- Designed in consultation with occupational therapists, end users and installers to accommodate a variety of individual needs
- Adjustable for comfort, at the point of installation, to accommodate clients' needs, with seat heights of between 390–640mm (provided by two sets of leg height supplied as standard)
- Carries weight up to 40 stone / 254kg
- +/– 13mm fine adjustment to foot or support leg to allow for gradient in floor to optimise comfort on a level seating
- Unique and innovative design will give years of trouble-free service
- Made from rust-proof stainless steel ensures durability for long-term use
- Available in white, or high-contrast colour options, in grey or blue padded seat for users with visual impairment
- Lifetime guarantee provides peace of mind
- Seat pad provides additional comfort for bariatric users
- Sturdy design allows for side transfer from either side

Product Codes

580 Wide Shower Seat White	**04110**
580 Wide Shower Seat Blue Padded	**04110P**
580 Wide Shower Seat Grey Padded	**04210P**
580 Wide Spare Seat Cushion Blue	**04175**
580 Wide Spare Seat Cushion Grey	**04275**

Dimensions (mm)

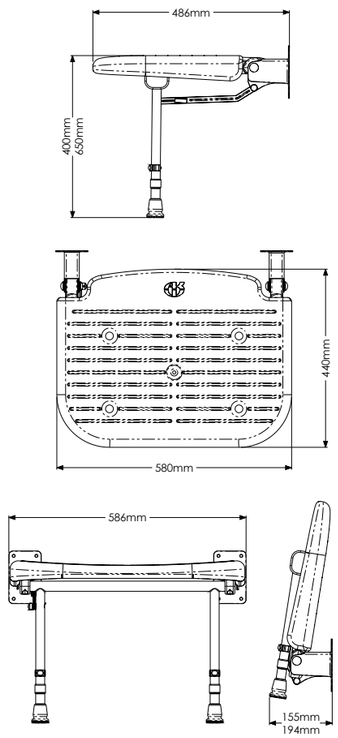

LIFETIME WARRANTY

4000 Series Large Extra Wide Fold-Up Shower Seat – 50 Stone Stainless Steel

Features & Benefits

- Specifically designed to offer choice to larger clients for extra comfort, space and support
- Sturdy design, carries weight limit up to 50 stone / 317.5kg
- Adjustable for comfort, at the point of installation, to accommodate clients' needs, with seat heights of between 390–640mm (provided by two sets of leg height supplied as standard)
- +/– 13mm fine adjustment to foot or support leg to allow for gradient in floor to optimise comfort on a level seating
- Unique and innovative design will give years of trouble-free service
- Made from rust-proof stainless steel ensures durability for long-term use
- Available in white, or high-contrast colour options, in grey or blue padded seat for users with visual impairment
- Lifetime guarantee provides peace of mind
- Seat pad provides additional comfort for bariatric users

Product Codes

660 Wide Shower Seat White	**04570**
660 Wide Shower Seat Blue Padded	**04580P**
660 Wide Shower Seat Grey Padded	**04570P**
660 Wide Spare Seat Cushion Blue	**04585**
660 Wide Spare Seat Cushion Grey	**04575**

Dimensions (mm)

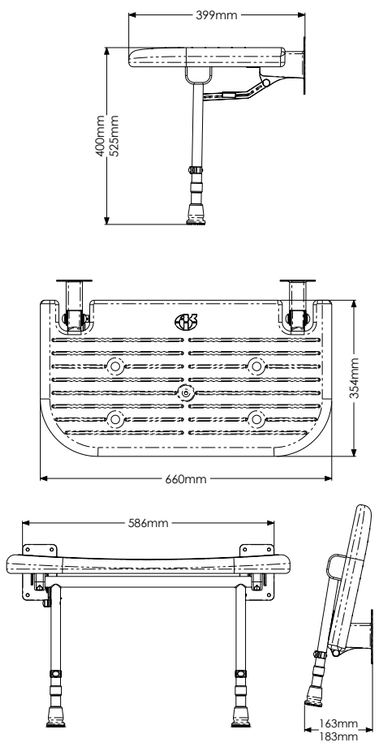

LIFETIME WARRANTY

4000 Series Standard Horseshoe Fold-Up Shower Seat – 40 Stone Stainless Steel

Features & Benefits

- Designed in consultation with occupational therapists, end users and installers to accommodate a variety of individual needs
- Adjustable for comfort, at the point of installation, to accommodate clients' needs, with seat heights of between 390–640mm (provided by two sets of leg height supplied as standard)
- Carries weight up to 40 stone / 254kg
- +/– 13mm fine adjustment to foot or support leg to allow for gradient in floor to optimise comfort on a level seating
- Unique and innovative design will give years of trouble-free service
- Made from rust-proof stainless steel ensures durability for long-term use
- Available in white, or high-contrast colour options, in grey or blue padded seat for users with visual impairment
- Lifetime guarantee provides peace of mind

Product Codes

Horseshoe Shower Seat White	**04100**
Horseshoe Shower Seat Blue Padded	**04100P**
Horseshoe Shower Seat Grey Padded	**04200P**
Spare Horseshoe Seat Cushion Blue	**04180**
Spare Horseshoe Seat Cushion Grey	**04280**

Dimensions (mm)

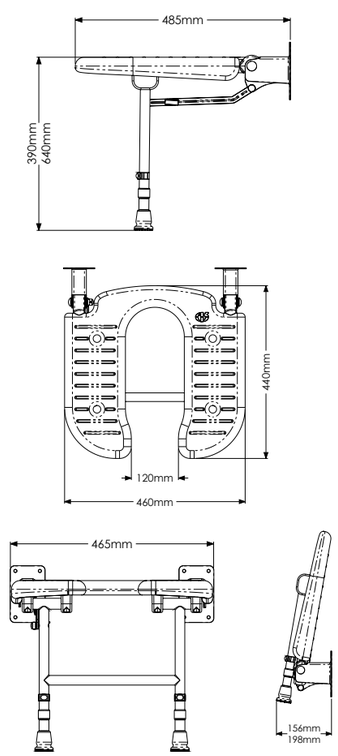

LIFETIME WARRANTY

4000 Series Extra Wide Horseshoe Fold-Up Shower Seat – 40 Stone Stainless Steel

Features & Benefits

- Designed in consultation with occupational therapists, end users and installers to accommodate a variety of individual needs
- Adjustable for comfort, at the point of installation, to accommodate clients' needs, with seat heights of between 390–640mm (provided by two sets of leg height supplied as standard)
- Carries weight up to 40 stone / 254kg
- +/– 13mm fine adjustment to foot or support leg to allow for gradient in floor to optimise comfort on a level seating
- Unique and innovative design will give years of trouble-free service
- Made from rust-proof stainless steel ensures durability for long-term use
- Available in white, or high-contrast colour options, in grey or blue padded seat for users with visual impairment
- Lifetime guarantee provides peace of mind

Product Codes

Wide Horseshoe Shower Seat White	**04120**
Wide Horseshoe Shower Seat Blue Padded	**04120P**
Wide Horseshoe Shower Seat Grey Padded	**04220P**
Spare Horseshoe Seat Cushion Blue	**04185**
Spare Horseshoe Seat Cushion Grey	**04285**
Spare leg kit for all 4000 Series	**00080**

Dimensions (mm)

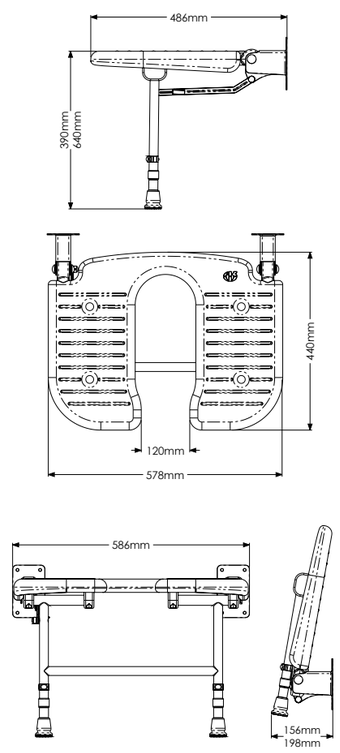

LIFETIME WARRANTY

4000 Series Standard Fold-Up Shower Seat with Back and Arms – 40 Stone Stainless Steel

Features & Benefits

- Uniquely and innovatively designed in consultation with occupational therapists, end users and installers to accommodate a variety of individual needs
- Independent folding arms make it suitable for side transfers
- Adjustable for comfort, at the point of installation, to accommodate clients' needs, with seat heights of between 390–640mm (provided by two sets of leg height supplied as standard)
- Carries weight up to 40 stone / 254kg
- +/– 13mm fine adjustment to foot or support leg to allow for gradient in floor to optimise comfort on a level seating
- Unique and innovative design will give years of trouble-free service
- Made from rust-proof stainless steel ensures durability for long-term use
- Available in white, with grey/blue arms and a grey or blue padded back/seat - contrasting blue colour aiding the visually impaired
- Seat pads offers additional comfort and can be easily removed for cleaning
- Seat lugs prevent the cushion from moving during side transfer providing reassurance for the user
- Lifetime guarantee provides peace of mind

Product Codes

White Standard Shower Seat with Blue Arms	**04130**
White Standard Shower Seat with Grey Arms	**04230**
Blue Padded Standard Shower Seat (with Blue Arms)	**04130P**
Grey Padded Standard Shower Seat (with Grey Arms)	**04230P**
Spare Seat Back Blue	**04190**
Spare Seat Back Grey	**04290**
Spare Seat Cushion Blue	**04170**
Spare Seat Cushion Grey	**04270**

Dimensions (mm)

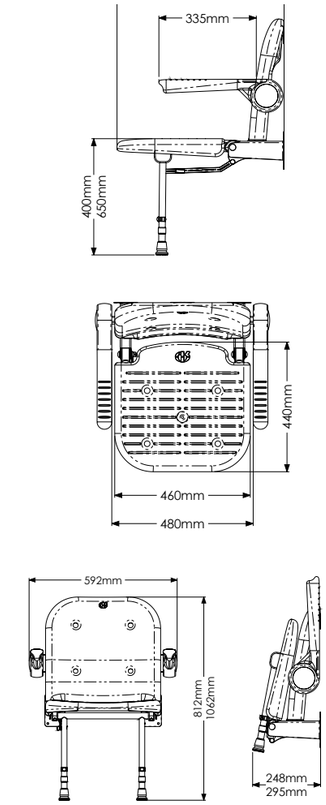

LIFETIME WARRANTY

4000 Series Extra Wide Fold-Up Shower Seat with Back and Arms – 40 Stone Stainless Steel

Features & Benefits

+ Uniquely and innovatively designed in consultation with occupational therapists, end users and installers to accommodate a variety of individual needs
+ Independent folding arms make it suitable for side transfers
+ Adjustable for comfort, at the point of installation, to accommodate clients' needs, with seat heights of between 390–640mm (provided by two sets of leg height supplied as standard)
+ Carries weight up to 40 stone / 254kg
+ +/– 13mm fine adjustment to foot or support leg to allow for gradient in floor to optimise comfort on a level seating
+ Unique and innovative design will give years of trouble-free service
+ Made from rust-proof stainless steel ensures durability for long-term use
+ Available in white, with grey/blue arms and a grey or blue padded back/seat - contrasting blue colour aiding the visually impaired
+ Seat pads offers additional comfort and can be easily removed for cleaning
+ Seat lugs prevent the cushion from moving during side transfer providing reassurance for the user
+ Lifetime guarantee provides peace of mind

Product Codes

White Wide Shower Seat with Blue Arms	**04140**
White Wide Shower Seat with Grey Arms	**04240**
Blue Padded Wide Shower Seat (with Blue Arms)	**04140P**
Grey Padded Wide Shower Seat (with Grey Arms)	**04240P**
Spare Seat Back Blue	**04195**
Spare Seat Back Grey	**04295**
Spare Seat Cushion Blue	**04175**
Spare Seat Cushion Grey	**04275**

LIFETIME WARRANTY

Dimensions (mm)

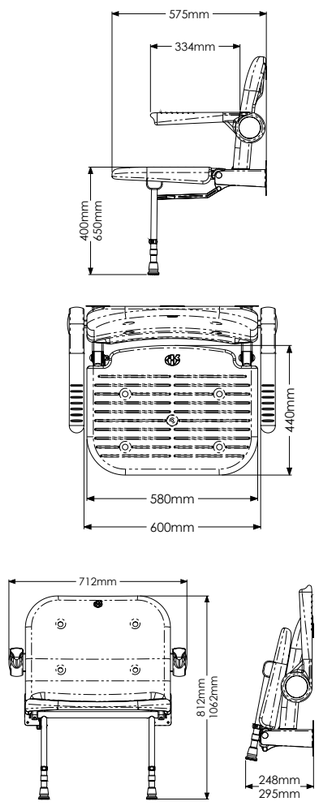

LIFETIME WARRANTY

4000 Series Standard Horseshoe Fold-Up Shower Seat with Back and Arms – 40 Stone Stainless Steel

Features & Benefits

+ Uniquely and innovatively designed in consultation with occupational therapists, end users and installers to accommodate a variety of individual needs
+ Independent folding arms make it suitable for side transfers
+ Adjustable for comfort, at the point of installation, to accommodate clients' needs, with seat heights of between 390–640mm (provided by two sets of leg height supplied as standard)
+ Carries weight up to 40 stone / 254kg
+ +/– 13mm fine adjustment to foot or support leg to allow for gradient in floor to optimise comfort on a level seating
+ Unique and innovative design will give years of trouble-free service
+ Made from rust-proof stainless steel ensures durability for long-term use
+ Available in white, with grey/blue arms and a grey or blue padded back/seat - contrasting blue colour aiding the visually impaired
+ Seat pads offers additional comfort and can be easily removed for cleaning
+ Seat lugs prevent the cushion from moving during side transfer providing reassurance for the user
+ Lifetime guarantee provides peace of mind

Product Codes

White Horseshoe Shower Seat with Blue Arms	**04160**
White Horseshoe Shower Seat with Grey Arms	**04260**
Blue Padded Horseshoe Shower Seat (with Blue Arms)	**04160P**
Grey Padded Horseshoe Shower Seat (with Grey Arms)	**04260P**
Spare Horseshoe Seat Cushion Blue	**04180**
Spare Horseshoe Seat Cushion Grey	**04280**

LIFETIME WARRANTY

Dimensions (mm)

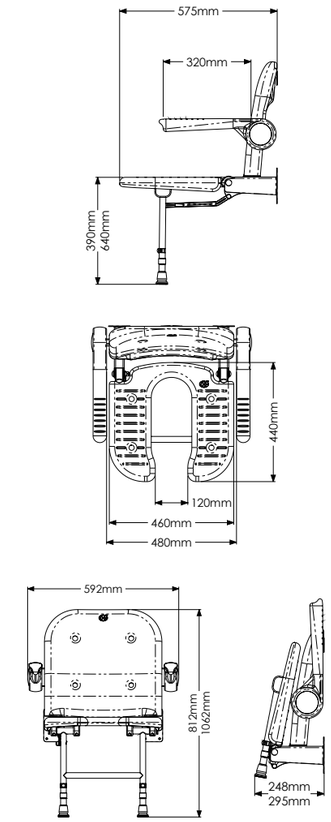

LIFETIME WARRANTY

4000 Series Extra Wide Horseshoe Fold-Up Shower Seat with Back and Arms – 40 Stone Stainless Steel

Features & Benefits

- Uniquely and innovatively designed in consultation with occupational therapists, end users and installers to accommodate a variety of individual needs
- Independent folding arms make it suitable for side transfers
- Adjustable for comfort, at the point of installation, to accommodate clients' needs, with seat heights of between 390–640mm (provided by two sets of leg height supplied as standard)
- Carries weight up to 40 stone / 254kg
- +/– 13mm fine adjustment to foot or support leg to allow for gradient in floor to optimise comfort on a level seating
- Unique and innovative design will give years of trouble-free service
- Made from rust-proof stainless steel ensures durability for long-term use
- Available in white, with grey/blue arms and a grey or blue padded back/seat - contrasting blue colour aiding the visually impaired
- Seat pads offers additional comfort and can be easily removed for cleaning
- Seat lugs prevent the cushion from moving during side transfer providing reassurance for the user
- Lifetime guarantee provides peace of mind

Product Codes

White Wide Horseshoe Shower Seat (with Blue Arms)	**04150**
Blue Padded Wide Horseshoe Shower Seat (with Blue Arms)	**04150P**
Grey Padded Wide Horseshoe Shower Seat (with Grey Arms)	**04250P**
Spare Horseshoe Seat Cushion Blue	**04185**
Spare Horseshoe Seat Cushion Grey	**04285**

LIFETIME WARRANTY

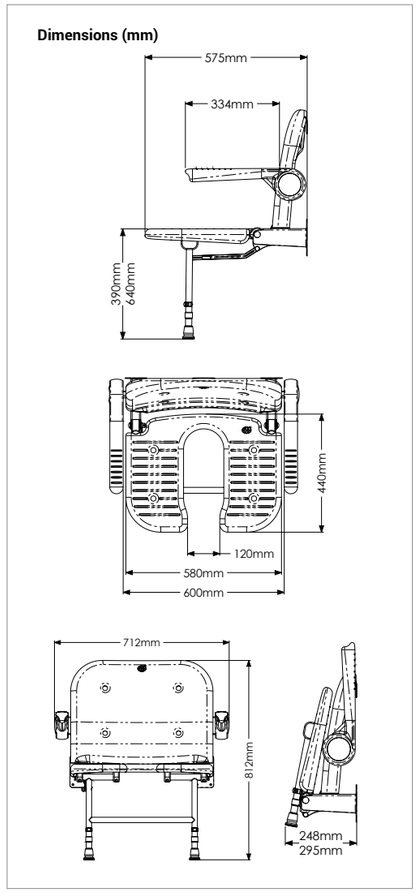

LIFETIME WARRANTY

GRABS/SEATS

3000 Series Standard Shower Seat – 30 Stone

Features & Benefits

- +/– 13mm fine adjustment to support leg to allow for gradient in floor to optimise comfort on a level seating
- Adjustable for comfort, at the point of installation, to accommodate clients' needs, with seat heights of between 450mm – 625mm
- Soft-feel polyurethane seat and back padding for added comfort
- Seat pads can easily be removed for cleaning
- Seat lugs prevent the cushion from moving during side transfer providing reassurance for the user
- Shrouded hinges minimise the risk of finger trapping for both user and carer
- Soft-feel padding will not absorb water even if cut or damaged
- Two mounting brackets provides superior wall fixing
- Made from powder-coated, aluminium and stainless steel
- Available with or without seat and back padding
- For users up to 30 stone / 190kg
- Only available with grey seat and back pads

Product Codes

White seat/Grey arms	**03131**
Padded Grey seat/Grey arms	**03131P**
Spare back pad for 3000 series seat	**03132**
Spare seat pad for 3000 series seat	**03133**
Spare arm set for 3000 series seat	**03134**
1000 and 3000 series seat leg kit	**18-002-084**

12 MONTH WARRANTY

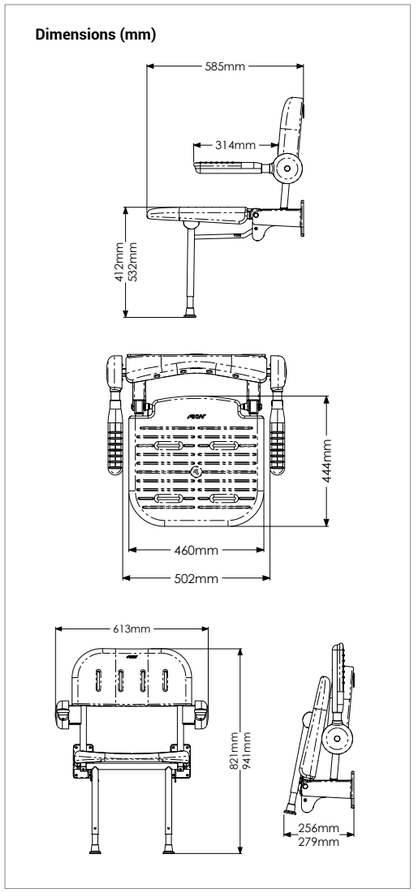

LIFETIME WARRANTY

GRABS/SEATS

2000 Series Compact Fold-Up Shower Seat – 25 Stone Aluminium

2000 Series shower seats are carefully designed, comfortable and rust-proof. The compact option is designed for smaller enclosures, where space is limited.

Features & Benefits

+ Made from rust-proof aluminium ensures durability for long-term use
+ Compact size, suitable for small enclosures where space is limited
+ Adjustable for comfort, at the point of installation, to accommodate clients' needs, with seat heights of between 482mm -607mm
+ +/– 13mm fine adjustment to support leg to allow for gradient in floor to optimise comfort on a level seating
+ Available in white, with an optional grey or blue padded seat for additional comfort, with contrasting blue colour aiding the visually impaired
+ Accommodates a maximum load capacity of 25 stone / 158kg

Product Codes

Compact Shower Seat White	**02000**
Compact Shower Seat Blue Padded	**02200P**
Compact Shower Seat Grey Padded	**02000P**
Spare Seat Cushion Blue	**02015**
Spare Seat Cushion Grey	**02215**
2000 Series Seat Adjustable Leg	**02012**

Dimensions (mm)

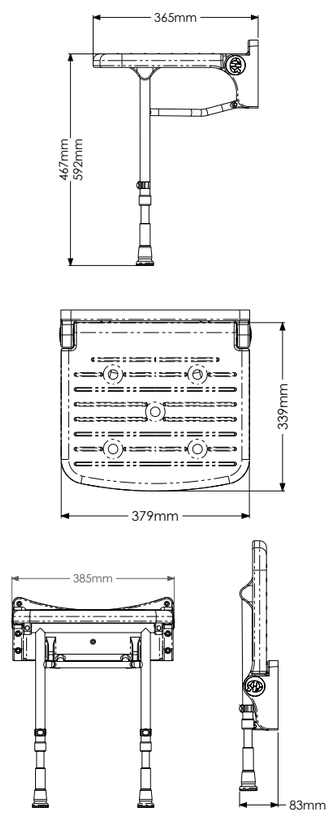

LIFETIME WARRANTY

2000 Series Standard Fold-Up Shower Seat – 25 Stone Aluminium

Features & Benefits

+ Made from rust-proof aluminium ensures durability for long-term use
+ Adjustable for comfort, at the point of installation, to accommodate clients' needs, with seat heights of between 482mm -607mm
+ +/– 13mm fine adjustment to support leg to allow for gradient in floor to optimise comfort on a level seating
+ Available in white, with an optional grey or blue padded seat for additional comfort, with contrasting blue colour aiding the visually impaired
+ Accommodates a maximum load capacity of 25 stone / 158kg

Product Codes

Standard Shower Seat White	**02010**
Standard Shower Seat Blue Padded	**02210P**
Standard Shower Seat Grey Padded	**02010P**
Spare Seat Cushion Blue	**02011**
Spare Seat Cushion Grey	**02211**
2000 Series Seat Adjustable Leg	**02012**

Leg kits

+ The new short leg kit for the 2000 series takes the seat down to 428mm (**04-024-069**)
+ The new long leg kit for the 2000 series allows the seat to be raised to 685mm (**04-024-066**)
+ Both have 125mm of adjustment in 25mm increments

Please note:
2000 Series seats are not supplied with an extra pair of legs.
The seat cushion is 15mm thick

Dimensions (mm)

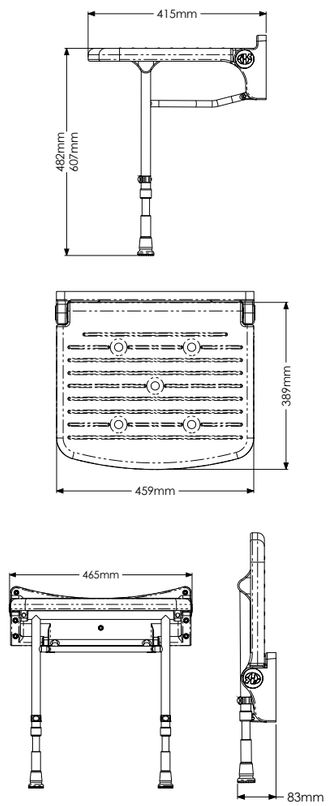

LIFETIME WARRANTY

2000 Series Standard Fold-Up Shower Seat with Back and Arms – 25 Stone Aluminium

Features & Benefits

- Made from rust-proof aluminium ensures durability for long-term use
- Adjustable for comfort, at the point of installation, to accommodate clients' needs, with seat heights of between 482mm -607mm
- +/– 13mm fine adjustment to support leg to allow for gradient in floor to optimise comfort on a level seating
- Available in white, with an optional grey or blue padded seat for additional comfort, with contrasting blue colour aiding the visually impaired
- Accommodates a maximum load capacity of 25 stone / 158kg

Product Codes

White Standard Shower Seat with Grey Arms	**02130**
White Standard Shower Seat with Blue Arms	**02230**
White Standard Shower Seat (with Grey Arms and Back)	**02130P**
White Standard Shower Seat (with Mid-Grey Arms and Back)	**02132P**
White Standard Shower Seat (with Blue Arms and Back)	**02230P**
Spare Seat Cushion Blue	**02011**
Spare Seat Cushion Grey	**02211**
Spare Back Cushion Blue	**02212**
Spare Back Cushion Grey	**02112**
2000 Series Seat Adjustable Leg	**02012**

LIFETIME WARRANTY

Dimensions (mm)

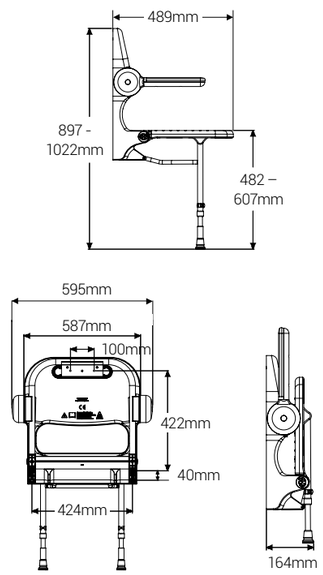

1000 Series Standard Shower Seat with Back and Arms– 25 Stone Mild Steel

Features & Benefits

- Adjustable for comfort, at the point of installation, to accommodate clients' needs, with seat heights of between 450mm – 625mm
- +/– 13mm fine adjustment to support leg to allow for gradient in floor to optimise comfort on a level seating
- Available in grey or blue padded back and seat for additional comfort, with high colour contrast aiding the visually impaired
- Soft-feel polyurethane seat and back padding for added comfort
- Seat pads can easily be removed for cleaning
- Seat lugs prevent the cushion from moving during side transfer providing reassurance for the user
- Shrouded hinges minimise the risk of finger trapping for both user and carer
- Soft-feel padding will not absorb water even if cut or damaged
- Two mounting brackets provides superior wall fixing
- Made from powder-coated, mild steel
- For users up to 25 stone / 158kg

Product Codes

Padded Grey seat/Grey arms	**01122**
Padded Blue seat/Blue arms	**01123**
Spare arm, back and seat pad kit – Grey	**01112**
Spare arm, back and seat pad kit – Blue	**01113**
1000 and 3000 series seat leg kit	**18-002-084**

12 MONTH WARRANTY

Dimensions (mm)

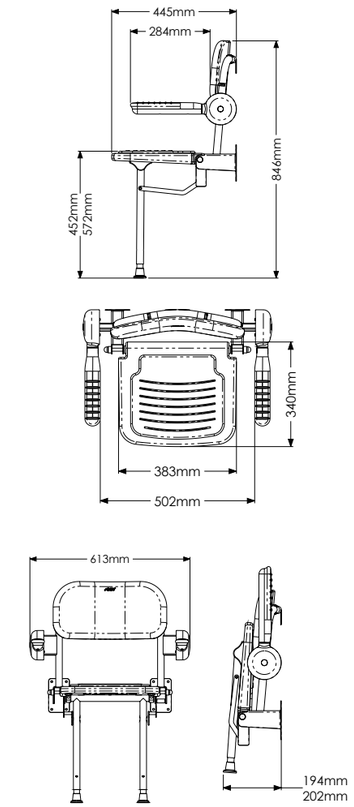

LIFETIME WARRANTY

Onyx Fold-up Shower Seats – 31 Stone

Features & Benefits

- Minimalistic, contemporary design offers a discreet non-obtrusive look
- Ergonomic seat with matt finish provides comfort and looks stylish
- For users up to 31 stone, 6lb / 200kg
- Water draining slot prevents water from pooling on the seat improving stability, skin safety and overall comfort
- Single fold-down leg with soft-close function is easy to operate with minimum effort
- Easy installation for a quick adaptation
- Low maintenance, simple to clean
- New seat option with adjustable leg greater flexibility when installing seat at a user specific height
- Lifetime warranty
- Unsuitable for use with acrylic trays

Product Codes

Onyx Compact Fold-up Shower Seat White	**02802WH-LS**
Onyx Compact Fold-up Shower Seat Black	**02802BK-LS**
Onyx Fold-up Shower Seat – Black	**02801BK-LS**
Onyx Fold-up Shower Seat – White	**02801WH-LS**
Onyx Shower Seat with Adjustable Leg – White	**02810WH-LS**
Onyx Shower Seat with Adjustable Leg – Black	**02810BK-LS**

Dimensions (mm)

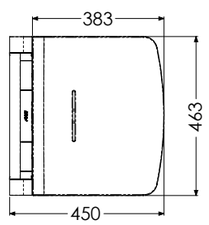

Onyx Fold-Up shower Seat

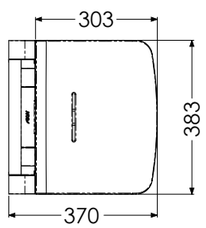

Onyx Compact Fold-Up shower Seat

Onyx Fold-up Shower Seats

Seat Height: 470mm / 480mm
Projection raised: 84mm / 86mm

Onyx Seat, Back and Arms – 31 stone

From the Onyx range of contemporary mobility aids, shower trays, and bathroom accessories, the Onyx Seat Back and Arms is a natural extension of the Onyx shower seat range.

Featuring a comfortable back rest and two fold-up support arms which can be independently installed to suit the users' requirements, the Onyx Seat Back and Arms is available in cool white or bold black, with stylish chrome accents.

Onyx Seat, Seat Back and Arms are conveniently available as a kit but can also be purchased separately.

Features & Benefits

- Minimalist aesthetics, designed in-house by AKW.
- Available in two contemporary colours: White and Black
- Arms and back rest are fitted independently, allowing positioning to be tailored to the user's preference.
- Comfortable back rest prevents users from experiencing the cold feeling of tiles or wall panels against their back.
- Designed to withstand everyday use with multiple safe and secure fixing points, and durable construction materials.
- Ergonomic, shaped seat designed for comfort, with a water drainage slot to aid with quick drying.
- Arm rests offer improved stability when lowering and rising from a shower seat.
- Fold-up arm rests and seat help to save space when not in use and are beneficial in multi-user environments.
- Fold-up seat with soft-close function.
- Easy to clean and maintain.

Product Codes

Shower Seat with Back and Arms – White	**02803WH-LS**
Shower Seat with Back and Arms – Black	**02803BK-LS**
Shower Seat (Adjustable Leg) with Back and Arms – White	**02811WH-LS**
Shower Seat (Adjustable Leg) with Back and Arms – Black	**02811BK-LS**
Compact Shower Seat with Back and Arms – White	**02804WH-LS**
Compact Shower Seat with Back and Arms – Black	**02804BK-LS**

Dimensions (mm)

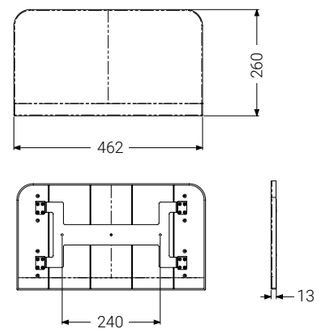

Onyx Seat Back and Arms – Back Rest

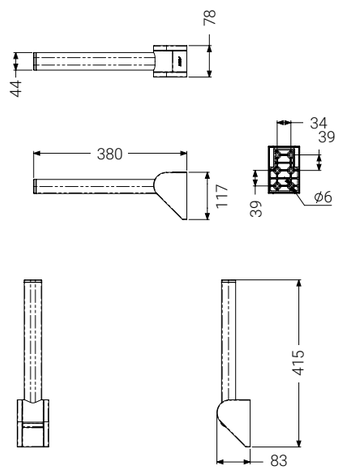

Onyx Seat Back and Arms – Arm Rests

Bama Slatted Fold-Up Shower Seat – 31 Stone

Features & Benefits

- Stylish, hygienic, easy to clean and folds neatly away
- Handles for easier side transfer
- Curved raised slats allow water run-off to drain
- Rounded corners with no sharp edges prevents injury
- For users up to: 31st 6lb / 200kg
- Made from ABS (plastic), nylon and epoxy coated stainless steel tube ensures longevity
- Stainless steel legs ensure long life
- Seven white or slate grey removable slats for easy cleaning
- Colour options offer user choice
- Four strong fixing points for secure installation provides peace of mind
- Seat height: 480mm +/– 15mm (adjustable legs to ensure level seating)
- Width: 490mm, Depth: 409mm

Product Codes

Bama Slatted Fold-Up Shower Seat - White	**02020MW-LS**
Bama Slatted Fold-Up Shower Seat - Grey	**02020MG-LS**

LIFETIME WARRANTY

Bama Slatted Hanging Shower Seat – 23 Stone

A shower seat which can be hung on a grab rail. Supports up to 23st 8lb (150kg), providing easy to install seated safety in the shower area and stylish design.

Features & Benefits

+ Safe showering whilst seated
+ Stylish, hygienic and easy to clean
+ Easy to install and remove for use in multi-user bathrooms
+ Curved raised slats allow water run-off to drain
+ Rounded corners with no sharp edges prevents injury
+ Shower seat can be hung on straight smooth grab rails (32mm diameter) with suitable load
+ Bearing and locked in place
+ Foam sleeve for hooks protects the grab rail from damage
+ Made from ABS (plastic), nylon and epoxy coated stainless steel tube
+ Easy locking system to secure seat to grab rail for peace of mind
+ Maximum load capacity: 23st 8lb (150kg)
+ Back frame foot adjustment 25mm
+ Width: 387mm, Height: 390mm, Depth: 514mm
+ Mounts onto an AKW Heavy Duty 1900 Series grab rail (See **page 332)**

LIFETIME WARRANTY

Product Code

Bama Hanging Shower Seat White	**02021WH**

Freestanding Shower Stool – 20 stone

Features & Benefits

+ Plasticised PVC suction feet provide added stability and security
+ Adjustable aluminium legs, makes it suitable for a variety of users
+ Supplied flat-packed in kit form easy to assemble at home
+ Drain holes allow the stool to dry easily after use
+ Designed for strength and durability
+ Can be easily moved in multi-user environments
+ Width: 500mm Depth: 300mm Height: 350-500mm
+ Tested to a maximum load of 20 stone / 127kg

Product Code

Freestanding Shower Stool	**02300**

LIFETIME WARRANTY

Freestanding Shower Stool with Back – 20 stone

Features & Benefits

+ Back rest provides extra support and comfort
+ Plasticised PVC suction feet provide added stability and security
+ Adjustable aluminium legs, makes it suitable for a variety of users
+ Supplied flat-packed in kit form easy to assemble at home
+ Drain holes allow the stool to dry easily after use
+ Designed for strength and durability
+ Can be easily moved in multi-user environments
+ Width: 500mm Depth: 300mm Height: 350-500mm
+ Tested to a maximum load of 20 stone / 127kg

LIFETIME WARRANTY

Product Code

Freestanding Shower Stool with Back	**02310**

Wooden Slatted Fold-Up Seat with Support Legs – 40 Stone Stainless Steel

Features & Benefits

- Made from ecologically friendly rubberwood (dense grain)
- Very stable with minimal shrinkage ensures durability for long-term use
- Offers a modern, contemporary design
- Profiled edges are varnished to give greater comfort and durability
- Slats allow the seat to dry easily after use
- Framework and legs made from rust-proof stainless steel for longevity
- Designed to accommodate a variety of individual needs
- Leg adjustment at installation accommodates floor gradient within the immediate showering area to provide level seating
- Lifetime guarantee provides peace of mind
- Seat height adjustment: 390-640mm
- Width: 442mm, Depth: 478mm
- For users up to 40 stone / 254kg in weight

Product Code

Wooden Slatted Fold-Up Seat	**04030**

Dimensions (mm)

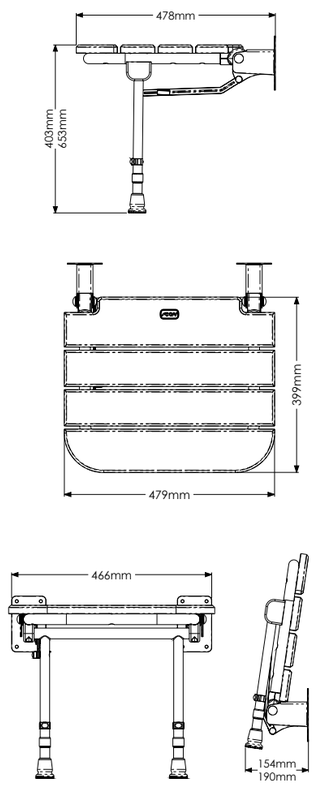

LIFETIME WARRANTY

Wooden Shower Stool – 40 Stone

Features & Benefits

- Made from ecologically friendly rubberwood (dense grain)
- Very stable with minimal shrinkage ensures durability for long-term use
- Offers a modern, contemporary design
- Profiled edges are varnished to give greater comfort and durability
- Slats allow the seat to dry easily after use
- Framework and legs made from rust-proof stainless steel for longevity
- Designed to accommodate a variety of individual needs
- Lifetime guarantee provides peace of mind
- Tested to BS EN 15373:2007
- Adjustable legs allow 25mm increments between 410mm and 535mm
- Width: 555mm Depth: 372mm
- For users up to 40 stone / 254kg in weight

Product Code

Wooden Shower Stool	**05080**

Dimensions (mm)

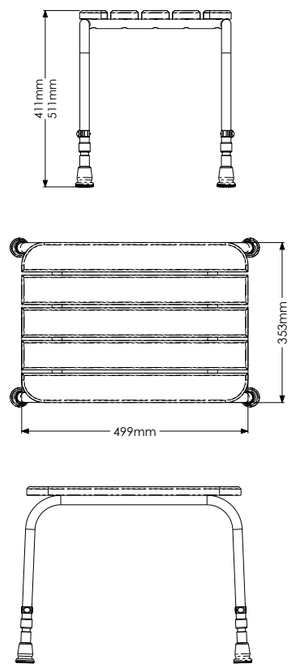

LIFETIME WARRANTY

Mobility Ramps

AKW supply a range of mobility ramps to provide solutions to a variety of access needs.

Threshold Ramp

Threshold ramps are available in two heights:
3 inch (76mm) and 6 inch (152mm) high.

Features & Benefits

+ Offers a simple and versatile solution for everyday use
+ Moving and carrying ramp to accommodate needs is easy thanks to the use of lightweight materials
+ Constructed from glass reinforced plastic (GRP) with smooth moulded side upstands and corners
+ Ramp surface provides colour contrast for those with visual impairment
+ Designed with user safety in mind to ensure ease of use and help to avoid slips, trips and fall
+ Meets DDA requirements with a safe and conforming gradient
+ Durable materials ensure the longevity of the product, which is also backed by a lifetime guarantee
+ Strong weight capacity of 47st / 300kg ensures ramp is suitable for a wide range of user requirements
+ Available in two heights: 3 inch (76mm) and 6 inch (152mm)

LIFETIME WARRANTY

Product Codes

3" Threshold Ramp	**25064**
6" Threshold Ramp	**25065**

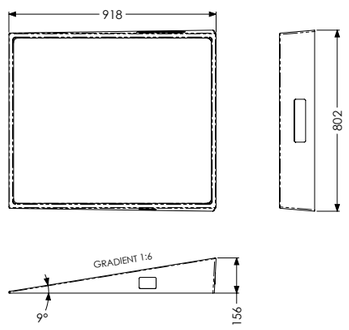

Standard Threshold RampSeat

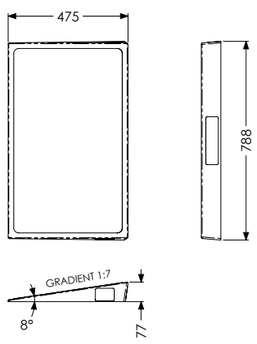

6" Threshold RampSeat

Standard Access Ramp

Features & Benefits

+ Offers a simple and versatile solution for everyday use
+ Constructed from glass reinforced plastic (GRP) with smooth moulded side upstands and corners
+ Designed to prevent damage to upholstery/vehicles when in use, being removed and stored away
+ Ramp surface provides colour contrast for those with visual impairment
+ Designed with user safety in mind to ensure ease of use and help to avoid slips, trips and fall
+ Meets DDA requirements with a safe and conforming gradient
+ Durable materials ensure the longevity of the product, which is also backed by a lifetime guarantee
+ Strong weight capacity of 47st / 300kg ensures ramp is suitable for a wide range of user requirements
+ Available in two lengths: 3ft or 4ft
+ Weight: 9kg (3ft) and 14kg (4ft)

LIFETIME WARRANTY

Product Codes

Standard Access Ramp 3ft	**25051**
Standard Access Ramp 4ft	**25052**

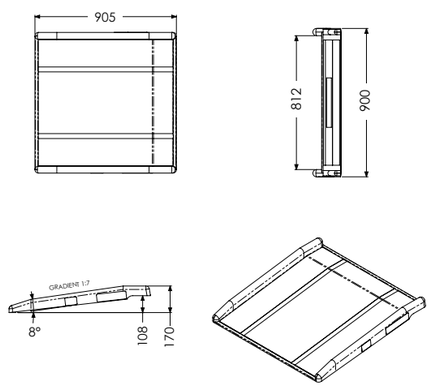

3ft ramp

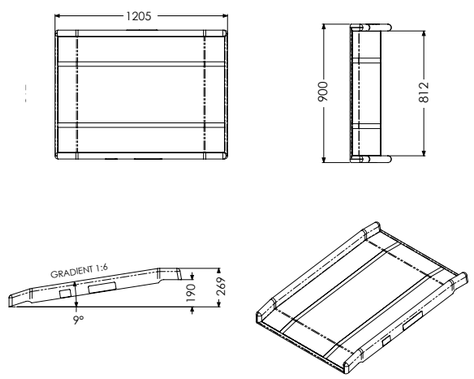

4ft ramp

Beautiful Bathrooms

Beautiful Bathrooms	**389**
Steel single ended bath	390
Bath panels	392
Bath shower screens	394
Bath shower kits	396
Bath taps	398
Tilted Mirror with Handle	404

BATHS

You may also need:

Bathroom Furniture 515

Wall Panels 309

Safety Flooring 321

Tiles & Accessories 301

Showers 267

Mobility Support 329

Plumbing Fittings 545

Beautiful Bathrooms

Bathrooms do not just meet our fundamental needs, they also contribute to our well-being – they make us feel good. This means they also need to look good, which is why at AKW, we place great importance on developing bathroom products that are not only practical, but beautiful too.

We are here to help you build your bathroom step by step, and invite you to browse our range of bathroom products to tailor your space, and accessorise as you see fit, making your home one that reflects who you are.

Download our Beautiful Bathrooms brochure here:

Steel Single Ended Bath

Sturdy and rigid, our single ended white steel bath range is manufactured from durable, high quality steel with a white enamel finish and comes in three lengths. It is supplied with a lifetime guarantee. It includes two pre-drilled tap holes and also features anti-slip properties which is beneficial if showering over the bath or in high use environments.

Features & Benefits

- Finished in a brilliant white
- Bath comes with two pre-drilled tap holes
- Can be cleaned regularly without affecting the finish
- Made from enameled steel (1.8mm)
- Can be fitted left or right-handed
- Etched anti-slip dot pattern covers half of the base
- Matches other sanitaryware and gives the illusion of more space
- Saves time and money as you do not have to cut out the tap holes
- Easy maintenance and hygiene
- Flexibility with your installation as can be fitted on the left or right in your bathroom
- The etched anti-slip dot pattern aids in the prevention of accidents when showering over the bath or in high use environments
- The etched anti-slip dot pattern ensures maximum comfort when bathing

LIFETIME WARRANTY

Excludes damage, wear & tear and limescale

BS EN232
BS EN1390
BS EN14516

Product Specifications

Available in three sizes: 1500 x 700mm / 1600 x 700mm / 1700 x 700mm
1.8mm thick (standard gauge 1.5mm pressed steel and 0.3mm enamel)
Two pre-drilled tap holes
Single ended
Plumbing fittings, taps and bath panels can be ordered separately
Maximum weight in bath – 250kg / 39st (including water)
Installed height: 505mm – 590mm (85mm adjustment on the bath legs)
Supplied with legs, handles, plug/chain, waste and overflow
Capacity to overflow: 126l (1500 x 700mm) / 138l (1600 x 700mm) / 150l (1700 x 700mm)
Weight of bath: 24kg (1500 x 700mm) / 24.5kg (1600 x 700mm) / 26kg (1700 x 700mm)

BATHS

BEAUTIFUL BATHROOMS BATHS

Product Codes

1700 x 700mm Steel Bath and Kit	**30842**
1700 x 700mm Steel Bathtub and Kit x 5	**30842X5**
1700 x 700mm Steel Bathtub and Kit x 20	**30842X20**
1600 x 700mm Steel Bath and Kit	**30843**
1600 x 700mm Steel Bath and Kit x 5	**30843X5**
1600 x 700mm Steel Bath and Kit x 20	**30843X20**
1500 x 700mm Steel Bath and Kit	**30844**
1500 x 700mm Steel Bath and Kit x 5	**30844X5**
1500 x 700mm Steel Bath and Kit x 20	**30844X20**
Bath Kit (legs, handles, plug/chain waste & overflow)	**30812**
Bath Leg Assembly	**30803**
Bath Handle Kit	**30810**
Bath Plug/Chain Waste & Overflow Kit	**30811**
McAlpine Seal Bath Trap 38mm x 50mm SM10	**30851**
McAlpine Seal Bath Trap 19mm x 38mm Q10	**30852**

Dimensions (mm)

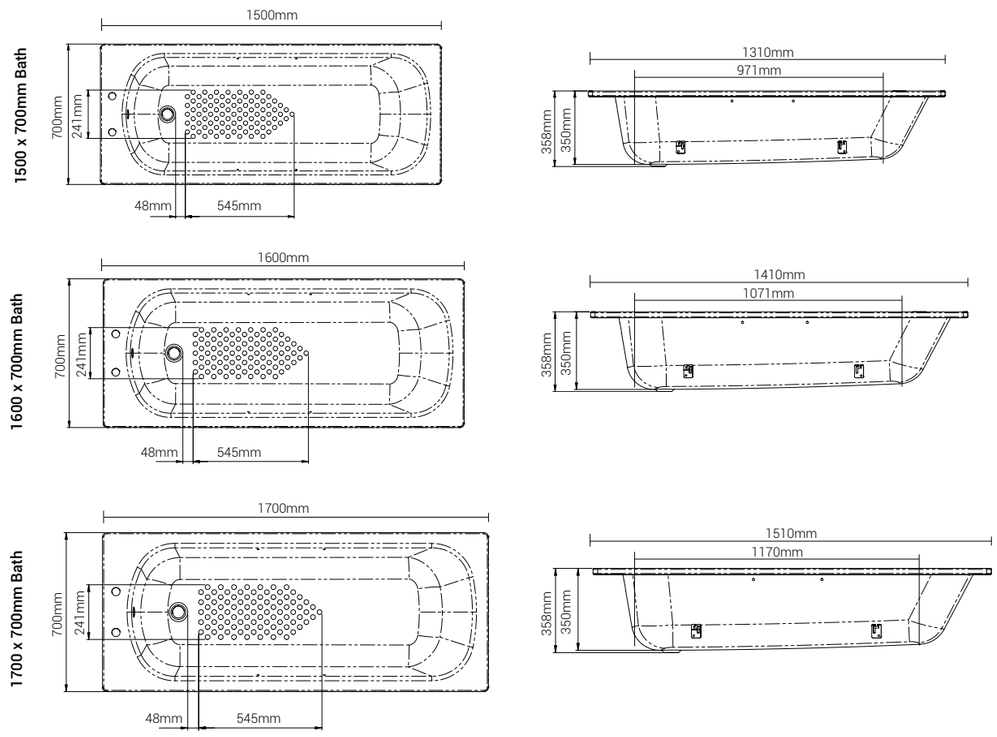

BATHS

Bath Panels

Sturdy and rigid, our single ended white steel bath range is manufactured from durable, high quality steel with a white enamel finish and comes in three lengths. It is supplied with a lifetime guarantee. It includes two pre-drilled tap holes and also features anti-slip properties which is beneficial if showering over the bath or in high use environments.

LIFETIME WARRANTY

Excludes damage, wear & tear and limescale

BS EN232
BS EN1390
BS EN14516

Features & Benefits

PVC Bath Panel

+ Flat white in colour
+ Available in two lengths - 1700mm and 700mm
+ Suitable to be used for bath height of 510mm
+ PVC panels can be used with a bath panel corner trim (available separately) which gives a seamless finish when fitting two panels together
+ Easy to install
+ Water resistant

Acrylic Single Skin Bath Panel

+ White shiny rolled finish
+ Available in two lengths - 1700mm and 700mm
+ Suitable to be used for bath height of 510mm
+ Durable finish does not show scratches and scuffs easily
+ Easy to install, with some flexibility to panel
+ Water resistant

Acrylic Double Skin Bath Panel

+ Shiny white rolled finish
+ Available in two lengths - 1700mm and 700mm
+ Suitable to be used for bath height of 510mm
+ Durable finish does not show scratches and scuffs easily
+ Easy to install, with some flexibility to panel
+ Water resistant
+ Reinforced construction provides additional ridigity and longevity

Marlbrook Bath Panel

+ Marlbrook panels match Marlbrook gloss white wallboard
+ Solid reinforced plywood construction with the highest quality finish
+ Available in two lengths - 1700mm and 700mm
+ Suitable to be used for bath height of 510mm
+ Easy to trim and install
+ Water resistant
+ Marlbrook panels can be used with a bath panel corner trim (available separately) which gives a seamless finish when fitting two panels together

BATHS

Product Codes

Extruded PVC Front Panel 1700mm	**30828**
Extruded PVC End Panel 700mm	**30830**
Extruded PVC End Panel 700mm & bath panel corner trim	**30845**
Acrylic Bath Panel Single Skin 1700mm	**30831**
Acrylic End Panel Single Skin 700mm	**30832**
Acrylic Bath Panel Double Skin 1700mm	**30833**
Acrylic End Panel Double Skin 700mm	**30834**
Marlbrook White Gloss Front Bath Panel 1700mm	**30835**
Marlbrook White Gloss End Bath Panel 700mm	**30836**
Marlbrook Gloss White End Bath Panel 700mm & corner trim	**30846**
Bath Panel Corner Trim*	**30813**

Dimensions (mm)

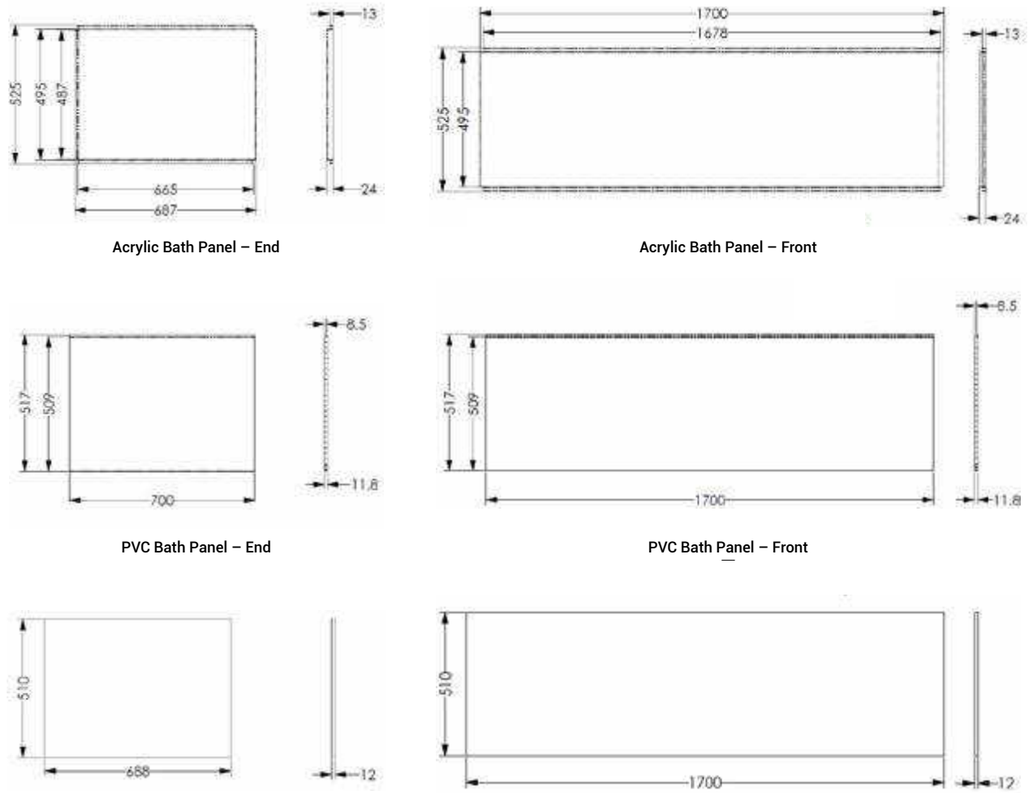

Acrylic Bath Panel – End

Acrylic Bath Panel – Front

PVC Bath Panel – End

PVC Bath Panel – Front

Marlbrook Bath Panel – End

Marlbrook Bath Panel – Front

BATHS

Bath Shower Screens

If you are looking to install a shower over a bath, a screen is a necessity. AKW glass bath screens are a stylish and practical solution to aid water retention within the showering area.

There are three sizes available, with a smooth curved top finish, and both hinged and fixed options.

Curved Top Bath Shower Screen

LIFETIME WARRANTY

Features & Benefits

- Polished chrome wall profile (40 x 44mm)
- 6mm clear toughened safety glass
- 15mm wall profile adjustment
- Rubber bottom seal supplied with hinged screens only: fixed screens will need to be sealed with a waterproof sealant
- Non-handed, can be installed for either left or right-handed operation
- Hinged screens can rotate inwards and outwards to 110˚
- Stylish and modern design to complement a wide variety of bathroom interiors
- Lightweight for ease of operation on hinged screens
- Aids with water retention within the showering area
- Non-handed for additional flexibility when installing
- Durable hinges swing 110˚ inwards and outwards to aid users when entering and exiting the bath area, as well as when cleaning

BATHS

Specifications

6mm thick toughened glass – Tested to EN14428
Polished chrome wall profile (40 x 44mm)
Hinged screens can rotate inwards and outwards to 110˚
Wall profile has 15mm tolerance for adjustment
Wall fittings supplied with each screen

Product Codes

Fixed Curved Top Bath Shower Screen 300mm H 1400mm / W 300mm / D 6mm	**30804**
Hinged Curved Top Bath Shower Screen 800mm H 1400mm / W 800mm / D 6mm	**30805**
Hinged Curved Top Bath Shower Screen 1000mm H 1400mm / W 1000mm / D 6mm	**30806**

Dimensions (mm)

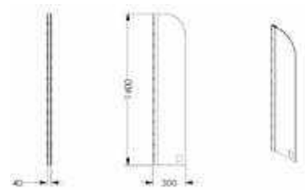

Fixed Curved Top Bath Shower Screen 300mm

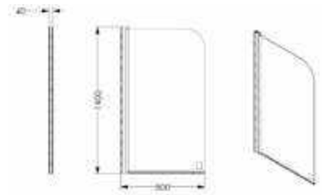

Hinged Curved Top Bath Shower Screen 800mm

Hinged Curved Top Bath Shower Screen 1000mm

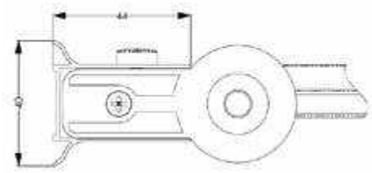

Hinged Shower Screen Profile

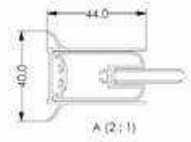

Fixed Shower Screen Profile

BATHS

Bath Shower Kits

If you need a shower above the bath we provide a choice of four shower kits, which can be used with our range of bath mixer taps.

Features and Benefits

AKW Basic Shower Kit (no rail) 1.5m Hose

- Practical one and half metre, chrome coiled shower hose, suitable for use when showering, bathing or cleaning
- Easy-to-use, removable shower head with three adjustable spray patterns
- Chrome wall bracket can be installed at a user specific height for use when showering

AKW Standard Shower Kit (with rail) 1.5m Hose

- Practical one and half metre, chrome coiled shower hose, suitable for use when showering, bathing or cleaning
- Easy-to-use, removable shower head with three adjustable spray patterns
- Chrome wall bracket can be installed at a user specific height for use when showering
- Integral shower hose retainer helps to prevent shower head being dropped and contaminated/damaged
- Adjustable, chrome riser provides extra stability and flexibility when showering, allowing you to easily amend the height of the shower head
- Soap dish, rail slider and fixings included

AKW Care Shower Accessory Kit (with rail) White or Chrome 2m

- Durable and practical two metre, double interlock, chrome shower hose, suitable for use when showering, bathing or cleaning
- Easy-to-use, removable shower head with three adjustable spray patterns
- Chrome wall bracket can be installed at a user specific height for use when showering
- Adjustable riser provides extra stability and flexibility when showering, allowing you to easily amend the height of the shower head
- Riser rail offers additional user safety, with a load-bearing capacity of 150kg, to aid in the prevention of accidents
- Integral shower hose retainer helps to prevent shower head being dropped and contaminated/damaged
- Soap dish, rail slider and fixings included
- White kit includes white shower head, rail and soap dish and Chrome kit includes chrome shower head, rail and clear soap dish

BATHS

Product Codes

AKW Basic Shower Kit (no rail) 1.5m Hose	**30819**
AKW Standard Shower Kit (with rail) 1.5m Hose	**30820**
AKW Care Shower Accessory Kit (with rail) White 2m Hose	**30821**
AKW Care Shower Accessory Kit (with rail) Chrome 2m Hose	**29050CH**

Dimensions (mm)

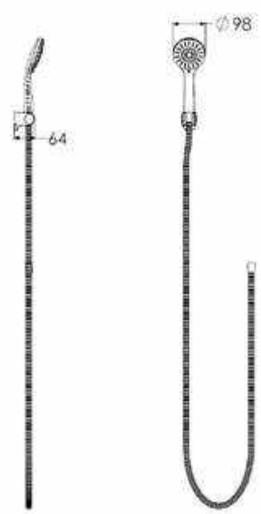

AKW Basic Shower Kit (no rail) 1.5m Hose

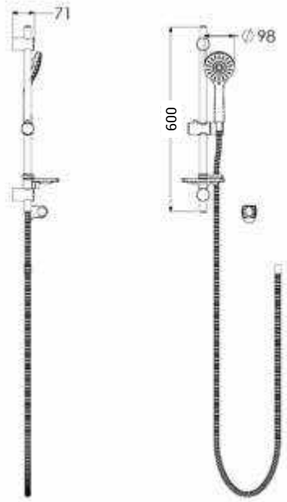

AKW Standard Shower Kit (with rail) 1.5m Hose

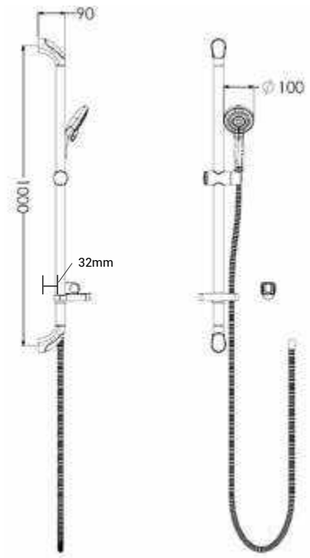

AKW Care Shower Accessory Kit (with rail) White 2m Hose

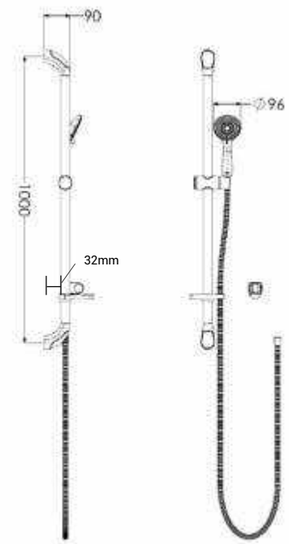

AKW Care Shower Accessory Kit (with rail) Chrome 2m Hose

BATHS

AKW Denova® Range

The AKW Denova brassware range is a sleek and modern choice for the bathroom. In a varied range of styles to complement any scheme.

Features and Benefits

- Easy to use handles
- WRAS approved
- Water saving with flow limiter included
- Clicker waste included with all basin mixers
- Suitable for all systems
- Streamlined stylish design handle
- Easy to use
- Lifetime guarantee
- Four options
- Clear hot/cold markings

Product Codes

AKW Denova Wash Basin Taps (Pair)	**23189**
AKW Denova Basin Mono Mixer Tap	**23316**
AKW Denova Lever Bath Taps (Pair)	**30814**
AKW Denova Bath Shower Mixer Taps (excluding shower kit)	**30816**

Specifications

- Zinc handle
- Brass body
- Quarter turn headwork
- Flow regulator
- Diverter
- Compatible with AKW Bath Shower Kits

AKW Denova Wash Basin Taps (Pair)

AKW Denova Bath Shower Mixer Taps (excluding shower kit)

LIFETIME WARRANTY

WRAS APPROVED PRODUCT

Dimensions (mm)

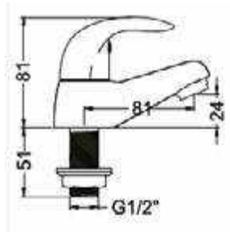

AKW Denova Wash Basin Taps Dimensions

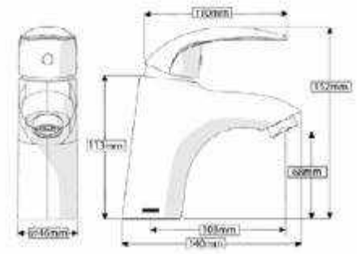

AKW Denova Basin Mono Mixer Tap Dimensions

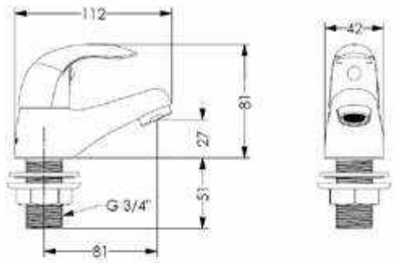

AKW Denova Lever Bath Taps Dimensions

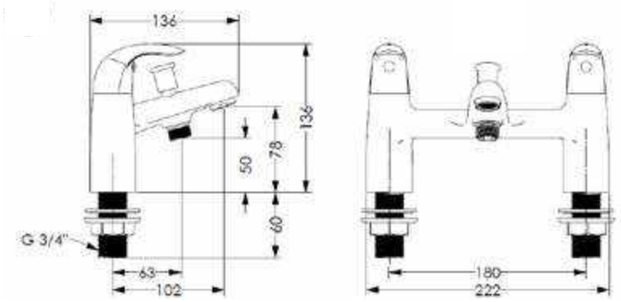

AKW Denova Bath Shower Mixer Taps Dimensions

Peg Lever Basin & Thermostatic Bath Shower Mixer Taps

Stylish chrome-plated peg lever basin taps with thermostatic bath shower mixer tap, also with a peg lever design, offers a classic yet contemporary finish to any bathroom suite.

Features & Benefits

Peg Lever Basin Taps

+ Classic design
+ Polished chrome finish
+ Engineered for long life and service
+ Easy to service and maintain
+ Peg levers make it simple to operate

Thermostatic Peg Lever Bath Shower Mixer Tap (excluding kit)

+ Classic design
+ Polished chrome finish
+ Engineered for long life and service
+ Easy to service and maintain
+ Peg levers make it simple to operate: water flow and temperature are controlled individually
+ Can maintain temperature, even if other taps in the house are in use
+ The maximum temperature is factory set at 38°C; an override button can be used to obtain hotter temperatures

Product Codes

Peg Lever Basin Taps (Pair)	**30822**
Thermostatic Peg Lever Bath Shower Mixer Tap (excluding kit)	**30817**

Peg Lever Basin Tap

Thermostatic Peg Lever Bath Shower Mixer Tap (excluding kit)

LIFETIME WARRANTY
Excludes limescale

WRAS APPROVED PRODUCT

BATHS

Specifications

Peg Lever Basin Taps

Colour / Finish: Chrome plated
Ceramic Disc Technology
Controls: Peg Lever zinc handles
Material: Brass Internals
Pressure requirements – Min: 0.2 Bar
WRAS approved

Thermostatic Peg Lever Bath Shower Mixer Tap (excluding kit)

Colour / Finish: Chrome plated
Ceramic Disc Technology
Diverter lever to change from bath to shower mode
Controls: Peg Lever zinc handles
Material: Brass Internals
Pressure requirements – Min: 0.2 Bar and Max: 5 Bar
WRAS approved

Dimensions (mm)

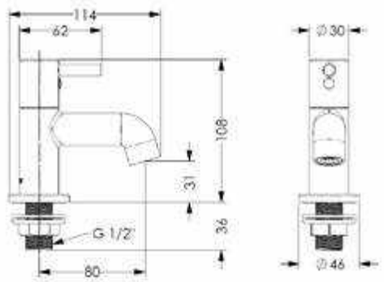

Peg Lever Tap

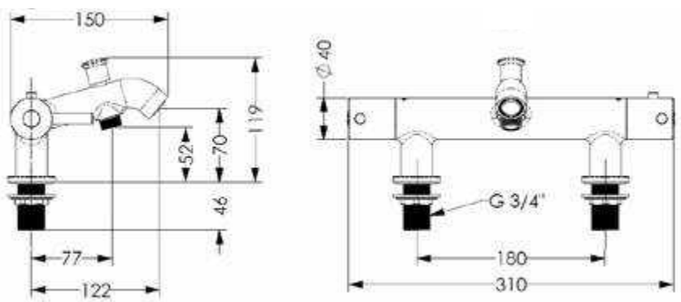

Thermostatic Peg Lever Bath Shower Mixer Tap

BATHS

Lever Handle Basin & Bath Taps

Easy-to-use lever basin and bath taps in a stylish chrome finish. Paddle lever handles are specifically designed to aid those with limited dexterity.

Features & Benefits

- Quarter turn pair of small domestic lever taps
- Quality design with smooth operation for ease of use
- Quick and simple to install
- Red/blue temperature indicator rings ensure user is aware of the expected water temperature
- Lever paddle handle is easier to operate by hand, closed fist, arm or elbow, and is ideal for those with limited dexterity
- Stylish chrome finish is easy to clean and complements a variety of bathroom suites

Specifications

Basin tap 1/2 inch (15mm) thread
Bath tap 3/4 inch (22mm) thread
Basin and bath tap have ceramic cartridges
Basin and bath tap have 0.2 bar minimum working pressure

Product Codes

Lever Wash Basin Taps (pair)	**23196CH**
Lever Bath Taps (pair)	**30848**

LIFETIME WARRANTY
Excludes limescale

WRAS APPROVED PRODUCT

BATHS

BEAUTIFUL BATHROOMS BATH TAPS

Dimensions (mm)

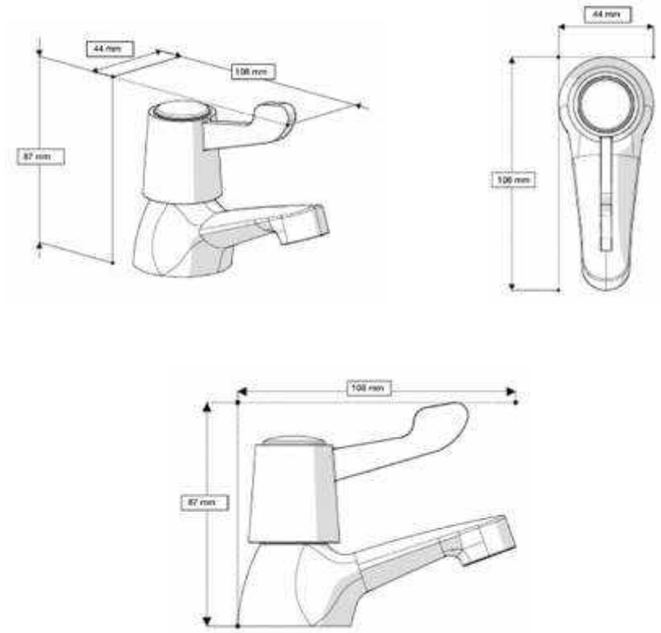

AKW Lever Wash Basin Taps

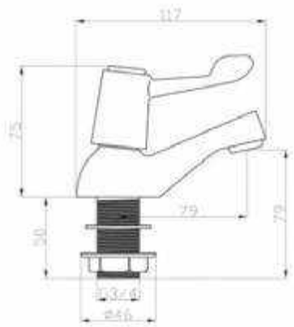

AKW Lever Bath Taps

BATHS

Tilted Mirror with Handle

Tilted Mirror in a contemporary design which would suit the interior of any bathroom. The mirror can be tilted up or down, depending on user preference.

Tilted Mirror with Handle

LIFETIME WARRANTY

Features & Benefits

- Contemporary, minimalistic design ensures it complements a wide range of bathroom styles and schemes
- Mirror can be tilted up or down, quickly and simply adjusted depending on the individual needs and mobility of the user
- Accessible handles enable easy adjustment for both left and right-handed users and those with limited dexterity, whilst also helping to keep the mirror surface clean
- The mirror is lightweight which allows for quick and easy installation with no specialist tools required
- The mirror has 6 safe and secure fixing points for user peace of mind, and is durable, while being designed to withstand everyday use
- Lifetime warranty for user peace of mind

BATHS

Specifications

Height: 544mm
Width: 600mm
Depth: 6.2mm
Depth of Handle: 2.5mm
Glass thickness: 6.2mm
Weight: 6.3kg
Fixing points: 6
Mirror Angle of Movement: +/- 21°
Wall clearance when mirror is not titled Top of the mirror: 92mm Bottom of the mirror: 117mm

Product Codes

Tilted Mirror with Handle	**23605SS**

BEAUTIFUL BATHROOMS TILTED MIRROR

Dimensions (mm)

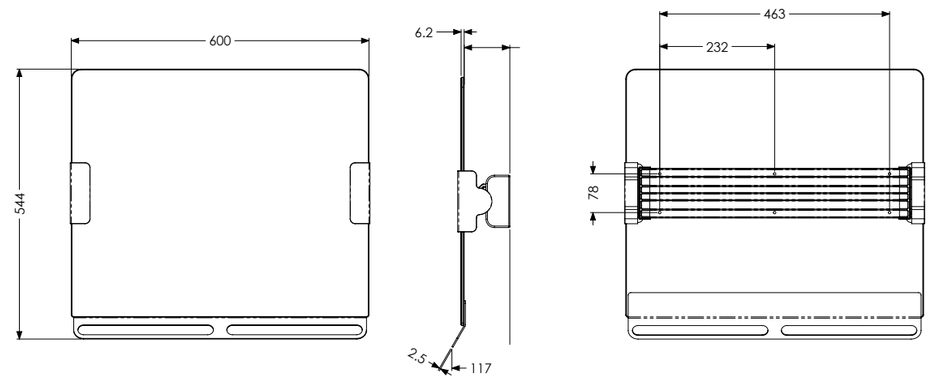

BATHS

Sanitaryware & Brassware

Wash & Dry Toilets & Bidets 409

AKW Bidet 410
Close-Coupled Bidet (Pack 1) 416
Back-to-Wall Bidet (Pack 2) 418
Wall-Hung Bidet (Pack 3) 420
AKW Rise & Fall Bidet (Pack 4) 422
Geberit AquaClean Mera Care 430
Closomat Palma Vita & Palma Life 432

Sanitaryware 435

Navlin Range 436
Livenza Plus Range 453
Livenza Range 456
Ergonomic Wash Basins 464
Salonex Hairdresser Basin 465
Wash Basin Fixing Brackets 466
Toilet Seats 467
Toilet Plinth 469

Brassware 473

Wash Basin Taps 474
Brassware Accessories 481

Doc M 485

Pack 1-10 490
Washroom Products 499

Walk-In & Assistive Baths 510

Blakemere Deep Soaker Bath 511
Shakerley Assistive Bath 512
Oulton Walk-In Bath 513

You may also need:

Bathroom Furniture 516
Mobility Support 329
Tiles & Accessories 301
Plumbing Fittings 545

Wash & Dry Toilets & Bidets

Designed to maximise user dignity and independence, wash & dry toilets and bidets aid those who require additional support when toileting.

AKW Bidet

Dignity Redefined – At the heart of our intimate care collection is the AKW Bidet

Ideal for a range of bathroom installations, the AKW Bidet offers a cost-effective, quick to install, easy to use and maintain bidet, with two models available, depending on your needs.

Our **Side-Entry Bidet** has been designed for installation on existing toilet pans and features an external side-entry water feed. This flexibility means the bidet can be easily removed and re-installed on another pan if required in the future.

For those wanting a longer-term solution, our **Bottom-Entry Bidet** has been designed specifically for use with select pieces of sanitaryware from our Navlin and Navlin Doc M collections, with a bottom-entry water feed that is cleverly concealed within the toilet pan.

Seat Options

The AKW Bidet is available with a choice of two seat options, both of which can be easily removed, and used with or without the detachable lid, depending on your preference or installation type.

- **Ergonomic bidet seat** moulds to the natural contours of the body for optimum comfort, as we understand visiting the toilet may take longer for some than others. It has also been designed for compatibility with most common UK toilet pans, with a wide seat and standard-sized aperture.
- **Consilio bidet seat** benefits from a contemporary aesthetic which has been specially designed to offer a clean, flush finish when paired with AKW Livenza Plus, Navlin, and Navlin Doc M sanitaryware. It also features a larger aperture which provides additional care benefits for those who need it.

Specifications

When in standard mode, the AKW Bidet requires 0.5 (dynamic) – 10 (static) bar of pressure to achieve a flow rate of 0.6L-1L per minute.
Low pressure mode requires just 0.2 (static) - 10 (static) bar to achieve a flow rate of 0.45L-0.65L per minute, with a maximum 25 second restart period.
BS EN 60335-1 Approval
2 years warranty
Compatible with AKW Livenza sanitaryware and most common UK toilet pans

Ergonomic Bidet Seat

Consilio Bidet Seat

2 YEAR WARRANTY

Product Codes

Side-Entry AKW Bidet with Consilo Seat and Lid	**30501**
Side-Entry AKW Bidet with Ergonomic Seat and Lid	**30502**
Bottom-Entry AKW Bidet with Consilio Seat and Lid	**30503**
Bottom-Entry AKW Bidet with Ergonomic Seat and Lid	**30504**
AKW Bidet 1 Year Extended Warranty	**30501-1**
AKW Bidet 2 Year Extended Warranty	**30501-2**
AKW Bidet 3 Year Extended Warranty	**30501-3**
AKW Bidet Remote Control*	**18-009-028**
Sensor Flush	**28404**

*Batteries are not included

SANITARYWARE

SANITARYWARE

AKW Rise & Fall Bidet

The Revolution is here – aim higher with the AKW Rise & Fall Bidet.

As experienced designers and innovators, we're constantly thinking ahead, anticipating the next step, and creating simple solutions which can help many overcome the struggles of day-to-day life.

Driven and inspired by the success of the AKW Bidet, we consulted renowned Occupational Therapists to devise a bidet product that further addresses the clinical needs of those with reduced mobility when toileting, challenges which often demand more specialist solutions.

The AKW Rise & Fall Bidet offers all the fantastic features of the AKW Bidet, but with an adjustable wall-hung toilet pan that raises and lowers to the height you require, weight-loading fold-up support arms, and a stylish design that feels at home in any modern bathroom.

At a glance...

Contemporary design incorporates toughened safety glass and a wall-hung toilet pan for a minimalist aesthetic which is low maintenance and simple to clean

Fold-up arms support up to 18.8st (120kg) and enable greater access when completing side transfers, with friction preventing a hard drop

Easy-to-use, right-handed buttons raise and lower the toilet pan to your individual requirements, particularly benefitting those living in multi-generational or multi-user households as the height is not defined at the point of installation, unlike some other products

Adjustable toilet pan offers a flexible height range of 410-610mm from the finished floor level to the top of the seat, enabling safer and easier side transfers on/off wheelchairs, shower chairs, and commodes

Rimless toilet pan with direct flushing technique improves hygiene by reducing the build-up of bacteria and making cleaning easier

The Four Cs:

Clean, Care, Comfort, Clever

We want to help those who need it, retain or regain their independence when using the toilet. To us, that isn't too much to ask, which is why we've designed the AKW Bidet with the Four Cs in mind.

The many adjustable settings the AKW Bidet offers can be quickly and easily tailored to meet specific cleaning requirements, all at the touch of a button.

Many useful care features have also been incorporated, each specifically addressing an often overlooked, or clinical need that can make toileting more challenging, while ensuring the experience of using the bidet is a comfortable one.

To achieve this, we have made sure everything our bidet does, it does well, with intelligent solutions cleverly designed to help make life better.

A Personalised **Clean**, Your Way

Adjustable spray control offers thorough and refreshing cleansing exactly where and how you need it

+ 5 rear wash positions
+ 5 feminine wash positions
+ 5 spray intensity settings (approx. 0.6-1L per minute)
+ 1–2-minute wash cycles
+ 4 spray modes: Steady, Pulsating, Oscillating, Pulsating & Oscillating

Instantaneous 1750W water heater offers a steady flow of warm water with no reheating period in between washes, and a choice of multiple temperature settings

+ 2-minute constant wash cycle
+ 1-minute gradual cooling wash cycle
+ 6-stage temperature control (approx. 31-39°C)

Powerful 350W dryer with settings that can be tailored to your specific needs

+ 3-minute standard drying cycle
+ 6 temperature settings (approx. 40-52°C)
+ 5 adjustable speed settings

We **Care** About the Little Things

Remote control provides full function control via a handheld, ergonomic remote, which is easy to use and supports carers with maximising user dignity

Night light helps those with visual impairment or dementia locate the toilet in the dark or dimly lit conditions, helping to alleviate the risk of confusion

Seat lugs provide discreet stability when side transferring from a chair or commode

Lid and seat lift assist with front moulded grips on the lid and contrasting side tabs for easy lifting, which are not only more hygienic but also support those with limited dexterity

Soft-close seat and lid are slower, quieter, and therefore safer for users, especially children or those easily startled by loud noises

Quick-release seat and lid allows you to adapt the bidet for various care needs, and makes cleaning easier

Easy to clean with a user-friendly design, which should require very little maintenance throughout the bidet's lifetime

SANITARYWARE & BRASSWARE WASH & DRY TOILETS & BIDETS

Adjustable spray Arm

Ergonomic handheld remote control

Lid lift assist with front moulded grips

Quick-release seat and lid

Comfort is Key, Always

Quiet heater, water pump, and dryer motor promote user dignity and allow you to use the toilet in peace

Optimised water pressure and flow for efficient and continuous cleaning that encourages a relaxing, enjoyable toileting experience

Strong load limit of 23.5st (150kg) ensures the bidet is suitable for a wide variety of users

Two stylish seat options with UK-sized apertures allow for compatibility with most common toilet pans

+ Ergonomic seat is shaped for maximum comfort with a wider seat
+ Consilio seat features a larger aperture ideal for care environments

Clever Design, for Now, and the Future

Integral seat sensor prevents accidental usage by ensuring activation only occurs when the seat is in use

Self-cleaning function ensures the spray arm nozzle and surrounding area are hygienic

+ Nozzle is cleaned both before and after use
+ Automatic water purge if not used for 72 hours

Low-pressure mode ensures the bidet continues working efficiently during periods of low pressure

Quick and easy for your plumber and/or electrician to install with no specialist tools or prior training required

Side or bottom-entry water supply offers flexibility within a range of bathroom installations

Flexible warranty for peace of mind

+ 2-year warranty provided as standard
+ Up to 5-years cover available with our extended warranty options

The AKW Bidet Collection

Pack One: Close-Coupled Bidet

A modern and discreet solution for wash/dry toileting, the Close-Coupled Bidet feels at home in any bathroom with its subtle yet stylish design and accessible price point.

The Close-Coupled Bidet is comprised of two products

+ AKW Bottom-Entry Bidet with Consilio Seat & Lid which benefits from multiple adjustable wash/dry settings as well as useful care features
+ Navlin Raised-Height Close-Coupled Pan for Bottom-Entry Bidet which has been designed to cleverly conceal bidet pipework, offering an integrated, modest bidet solution

To make ordering even easier, both products can be purchased in one simple pack, with compatible cisterns available separately depending on your flush requirements.

Product Code

AKW Close-Coupled Bidet Pack	**28410**

To complete your WC, you will need to select one of the two compatible cisterns:

To opt for our contact-free sensor flush option you will need to order the below product code with

23574 | Navlin Low-Level Cistern with Raised Push Button Flush and replace the button flush mechanism with the sensor flush valve during installation.

23594 | Navlin Doc M Cistern with Lever Flush

28404 | Sensor Flush

Features & Benefits

+ Raised-height toilet pan makes it easier for less mobile users to lower and rise from the toilet
+ Rear holes in the toilet pan conceal AKW Bidet pipework for an enhanced cosmetic finish and reduction of hazards in the event of a trip or fall
+ Rimless toilet pan with direct flushing technique offers improved hygiene by reducing the build-up of bacteria and making cleaning easier
+ Toilet pan can support up toa 60st (400kg); bidet seat can support a maximum load of 23.5st (150kg)
+ Compatible with Navlin and Navlin Doc M close-coupled cisterns which come with a choice of raised push button, spatula lever, or sensor flush options, all of which are non-handed and can be easily operated by hand, closed fist, or elbow
+ Pair with Navlin and Navlin Doc M wash basins for a complete bathroom suite

2 YEAR WARRANTY — AKW Bidet

LIFETIME WARRANTY — AKW Sanitaryware

The AKW Bidet Collection

Pack Two: Back-to-Wall Bidet

Providing a stylish and Doc M compliant wash/dry toileting solution, the Back-to-Wall Bidet is suitable for a variety of users and can be installed with a concealed cistern, with AKW Bathroom Furniture, or with a low-level cistern.

The Back-to-Wall Bidet is comprised of two products:

+ AKW Bottom-Entry Bidet with Consilio Seat & Lid which benefits from multiple adjustable wash/dry settings as well as useful care features
+ Navlin Doc M Raised-Height Back-to-Wall Pan for Bottom-Entry Bidet which has been designed to cleverly conceal bidet pipework, offering an integrated, modest bidet solution

Product Code	
AKW Back-to-Wall Bidet Pack	**28412**

If installing with a concealed cistern, you will need to order the below concealed cistern and flush plate.

28179 | Dudley Miniflo Cistern

28180 | Palm-Push Dual Flush Plate

If installing with AKW Bathroom Furniture, you will need to select a WC unit from **page 436**, which come with a cistern and recessed flush button included.

If installing a low-level WC, you will need to select one of the two compatible cisterns:

23549 | Navlin Low-Level Cistern with Raised Push-Button Flush & Flush Pipe

23559 | Navlin Doc M Low-Level Cistern with Lever Flush & Flush Pipe

To opt for our contact-free sensor flush option you will need to order the below product codes:

23549 | Navlin Low-Level Cistern with Raised Push Button Flush and replace the button flush mechanism with the sensor flush valve during installation.

28404 | Sensor Flush

Features & Benefits

+ To make ordering even easier, both products can be purchased in one simple pack, with compatible cisterns and furniture available separately depending on your installation requirements.
+ Doc M compliant, raised-height toilet pan makes it easier for less mobile users to lower and rise from the toilet
+ Rear holes in the toilet pan conceal AKW Bidet pipework for an enhanced cosmetic finish and reduction of hazards in the event of a trip or fall
+ Rimless toilet pan with direct flushing technique offers improved hygiene by reducing the build-up of bacteria and making cleaning easier
+ Four-point, side-entry floor fixings reduce the build-up of dust and bacteria, are easier to clean, and come with white cosmetic caps to prevent rusting
+ Toilet pan can support up to 60st (400kg); bidet seat can support a maximum load of 23.5st (150kg)
+ Can be installed with a concealed cistern or AKW bathroom furniture for a streamlined aesthetic that hides any unsightly pipework
+ Can be installed with a low-level cistern, flush pipe, and optional padded back rest (available in contrasting colours); cisterns are available with a choice of raised push button, spatula lever, or sensor flush options, all of which are non-handed and can be easily operated by hand, closed fist, or elbow
+ Pair with Navlin and Navlin Doc M wash basins for a complete bathroom suite

2 YEAR WARRANTY — AKW Bidet

LIFETIME WARRANTY — AKW Sanitaryware

The AKW Bidet Collection

Pack Three: Wall-Hung Bidet

Ultra-modern and minimalist in its design, the Wall-Hung Bidet can be installed at a user-specific height and feels at home in any 21st century bathroom.

The Wall-Hung Bidet is comprised of four products:

+ AKW Bottom-Entry Bidet with Consilio Seat & Lid which benefits from multiple adjustable wash/dry settings as well as useful care features
+ Wall-Hung Pan for Bottom-Entry Bidet which has been designed to cleverly conceal bidet pipework, offering an integrated, modest bidet solution
+ Geberit Duo Fix Wall-Hung Frame & Cistern which allows for a strong and reliable installation
+ Geberit Kappa 20 Flush Plate (Chrome)

To make ordering even easier, all four products can be purchased in one simple pack.

Product Code	
AKW Wall-Hung Bidet Pack	**28413**

Features & Benefits

+ Minimalist wall-hung toilet pan creates the illusion of space and enables easier cleaning
+ Rear holes in the toilet pan conceal AKW Bidet pipework for an enhanced cosmetic finish and reduction of hazards in the event of a trip or fall
+ Rimless toilet pan with direct flushing technique offers improved hygiene by reducing the build-up of bacteria and making cleaning easier
+ Toilet pan and frame can support up to 60st (400kg); bidet seat can support a maximum load of 23.5st (150kg)
+ Concealed wall-hung frame and integrated cistern keeps unsightly pipework hidden for a more streamlined look
+ Adjustable frame allows the pan to be installed at a user-specific height (from 820-1020mm)
+ Pair with Navlin and Navlin Doc M wash basins for a complete bathroom suite

2 YEAR WARRANTY — AKW Bidet

LIFETIME WARRANTY — AKW Sanitaryware

The AKW Bidet Collection

Pack Four: Rise & Fall Bidet

Designed to provide a contemporary and flexible wash/dry toileting solution, the Rise & Fall Bidet addresses a variety of clinical needs while promoting the retention or increase of independence and dignity.

Featuring a wall-hung bidet which benefits from an adjustable height range, easy-to-use up/down buttons, and weight-loading fold-up arms, the Rise & Fall Bidet is suitable for users of different heights, ages, and needs.

The Rise & Fall Bidet is comprised of three products:

+ AKW Bottom-Entry Bidet with Consilio Seat which benefits from multiple adjustable wash/dry settings as well as useful care features
+ Wall-Hung Pan for Bottom-Entry Bidet which has been designed to cleverly conceal bidet pipework, offering an integrated, modest bidet solution
+ Rise & Fall Cistern Unit which enables the user to adjust the pan height, incorporates fold-up support arms, and houses the concealed cistern with built-in dual push button flush

To make ordering even easier, all three products can be purchased in one simple pack. Pair with our range of Navlin and Navlin Doc M wash basins for a complete bathroom suite.

Product Code	
AKW Rise & Fall Bidet Pack	**28414**

Features & Benefits

+ Height of the toilet pan can be adjusted, offering a flexible height range of 410-610mm from the finished floor level to the top of the seat, and enabling safer, easier side transfers
+ Easy-to-use up/down buttons on the right-hand arm raise and lower the toilet pan to your individual requirements, benefitting those living in multi-generational or multi-user households
+ Rear holes in the toilet pan conceal AKW Bidet pipework for an enhanced cosmetic finish and reduction of hazards in the event of a trip or fall
+ Rimless toilet pan with direct flushing technique improves hygiene by reducing the build-up of bacteria and making cleaning easier
+ Concealed cistern keeps unsightly pipework hidden for a more streamlined look, with the dual push button flush offering full (6 litre) and reduced flush options
+ Weight-loading arms aid with safe navigation around the bathroom and fold up to enable greater access, with friction preventing a hard drop
+ Cistern unit with toilet pan can support up to 60st (400kg); bidet seat can support up to 23.5st (150kg); arms can support up to 18.8st (120kg) each
+ Incredibly stylish aesthetic with toughened safety glass front, minimalist wall-hung pan, and taupe arms

2 YEAR WARRANTY — AKW Bidet and Rise & Fall Cistern unit

5 YEAR WARRANTY — AKW Bidet and Rise & Fall Cistern unit extended warranty up to 5 years, available seperately

LIFETIME WARRANTY — AKW Sanitaryware

Toilet Seats for Bidet

Ergonomic Seat for AKW Bidet

Consilio Seat for AKW Bidet

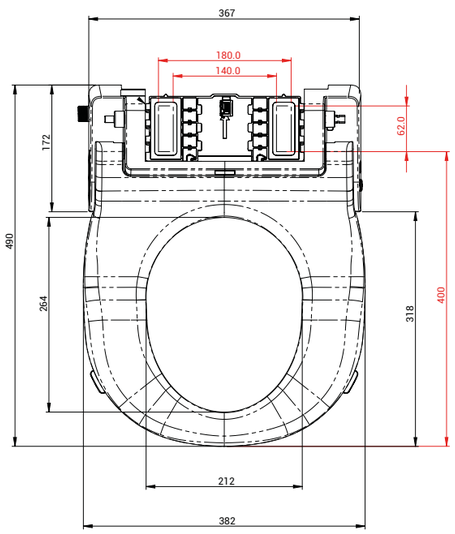

Dimensions highlighted in red are the adjustable range for fixing the bidet to pan

Ergonomic Seat

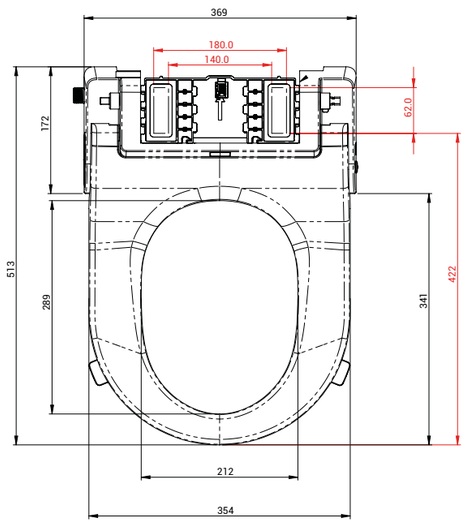

Dimensions highlighted in red are the adjustable range for fixing the bidet to pan

Consilio Seat

Dimensions (mm)

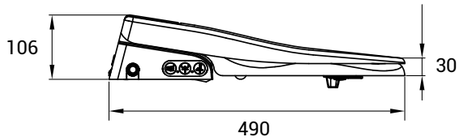

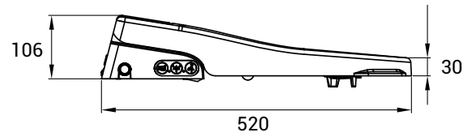

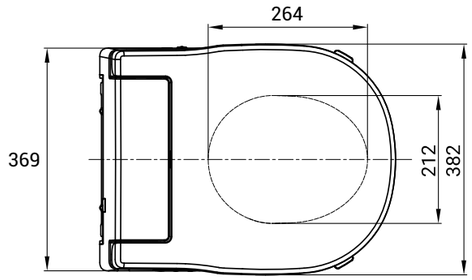

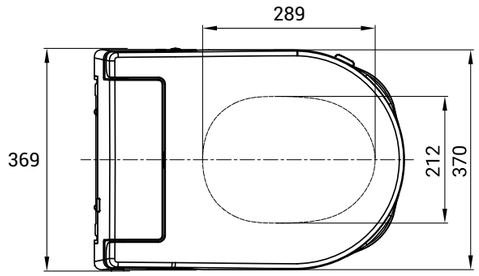

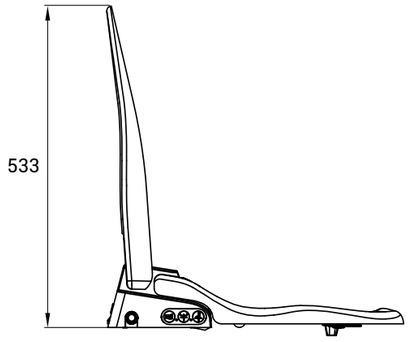

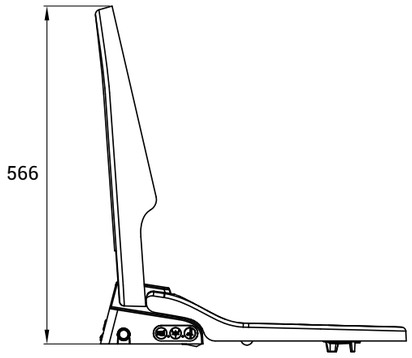

Ergonomic Seat for AKW Bidet

Designed for use with most common UK toilet pans.

Consilio Seat for AKW Bidet

Designed for use with AKW Livenza Plus, Navlin, and Navlin Doc M toilet pans.

Technical Specification AKW Bidet

Wash	Rear wash	Yes
	Feminine wash	Yes
	Oscillating spray	Yes
	Pulsating spray	Yes
	Oscillating and pulsating spray	Yes
	Adjustable water temperature	6 levels (default 4th)
	Temperature modes	Constant temperature (default) and gradual cooling
	Adjustable flow rate	5 steps (default 3rd)
	Adjustable spray position	5 steps (default 3rd)
Warm Air	Air drying	Yes
	Adjustable dryer temperature	6 levels (default 3rd)
	Adjustable dryer rate	5 steps (default 3rd)
Hygiene	Nozzle auto cleaning	Yes
	Nozzle manual cleaning	Yes
Features	Night light	Yes
	Soft-closing seat and lid	Yes
	Quick-release seat and lid	Yes
	Control buttons	Yes
	Remote control	Yes
Specification	Water supply connector	G 1/2" / G3/8"
	Water supply direction	Side or bottom entry
	Water supply pressure	Min 0.5 (dynamic)~Max 8 (static) (in standard mode)
	Water supply temperature	4~30°C
	Rated voltage	AC230V, 50HZ
	Power rating	1750W
	Length of power cord	approx. 1.5m
	Ambient temperature	4~40°C
	Protection degree	IPX4
	Maximum weight loading	23.5 st / 150kg
Wash Device	Flow rate (standard)	600~1000ml/min
	Flow rate (low)	450~650ml/min
	Water temperature	31~39°C
	Wash cycle time (standard)	2 Minutes at constant temperature mode or 1 minute at gradual cooling mode.
	Wash cycle time (low)	1 Minute at constant temperature mode and gradual cooling mode.
	Heating mode	Element
	Safety device	Thermal cut out fuses/liquid level switch/thermostat
	Back flow prevention	Air gap
Dry Device	Minimum air volume	0.2m³/min
	Maximum dryer power	350W
	Warm air temperature	40~52°C
	Dry cycle time	3 minutes
	Safety device	Thermal cut out fuses/thermostat
Remote Control	Frequency	~2460MHz
	Maximum RF output power	0dBm
	Type of batteries	2x 1.5V LR03 AAA (batteries not included)

SANITARYWARE

SANITARYWARE & BRASSWARE WASH & DRY TOILETS & BIDETS

Technical Specification Rise & Fall Cistern Unit

Flush Volume	6L (full flush) & Reduced Flush
Lift Direction	Vertical Lift
Rated Voltage	AC 220-240V,50/60Hz
Max. Power	200W
Drive Mode	DC Motor Lead Screw
Duty Cycle	10%, Max. 2 Min Operate/Min. 18 Min Stop
Operation Switch	Push-Button Switch
Adjustable Lifting Range	200mm
Length of Power Cord	2m
Max. Load Weight	60st / 400kg
Max. Load Weight Each Arm Rest	18.8st / 120kg
Waterproof Rating	IPX4
Ambient Temperature	4~40C
Drainage Direction	Wall & Floor Drainage
Dimensions (mm)	(H) 1099 x (W) 543 x (D) 212
Net Weight	55.9kg
Colour of Glass Panel	White

Dimensions (mm)

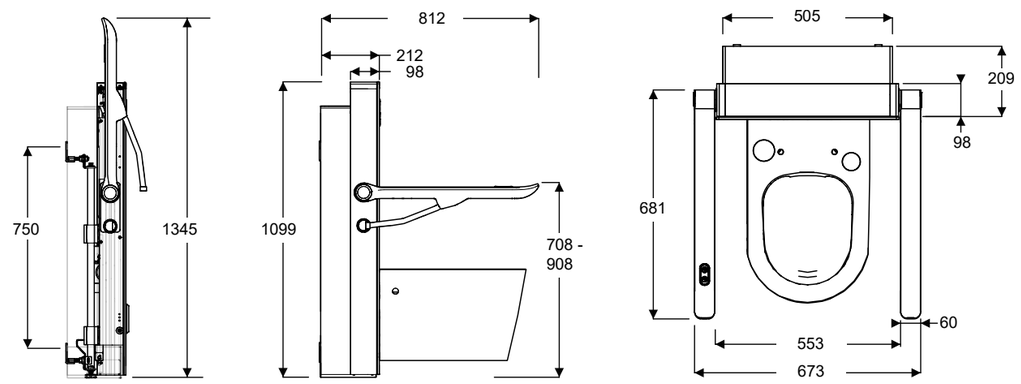

Rise & Fall Cistern Unit

SANITARYWARE

Rise & Fall WC

The Rise & Fall WC benefits from an adjustable height range, easy-to-use up/down buttons, and weight-loading fold-up arms, offering flexible toileting for users of different heights, ages, and requirements.

Features & Benefits

- Height of toilet pan can be adjusted with a flexible height range of 424-624mm from finished floor level to top of seat
- Easy-to-use up/down buttons on right-handed arm raise and lower the toilet pan to users' individual requirements, ideal for those living in multi-generational or multi-user households
- Flexible height settings enable safer and easier side transfers on/off wheelchairs, shower chairs and commodes
- Minimalist wall-hung toilet pan creates the illusion of space and enables easier cleaning
- Rimless toilet pan with direct flushing technique improves hygiene by reducing the build-up of bacteria and making cleaning easier
- Rounded edges and corners reduce the risk of injury in the event of a trip or fall
- Contemporary and durable carbamide toilet seat supports up to 23.5st (150kg) and benefits from soft-close hinges which are slower, quieter and safer for users
- Cistern unit with toilet pan can support 60st (400kg) to cater to a wide variety of users
- Fold-up arms enable greater access when completing side transfers, with friction preventing a hard drop
- Arms can support up to 18.8st (120kg) each and can be utilised to help users with safely navigating around the bathroom
- Fully compliant, concealed cistern keeps unsightly pipework hidden for a more streamlined look
- Dual push button flush offers full (6 litre) and reduced flush options for increased performance and water efficiency
- Unit features a toughened safety glass front for peace of mind, with a stylish chrome/plastic flush, and taupe arms

Product Code

Rise & Fall WC	**28415**

Rise & Fall Cistern Unit

The Rise & Fall Cistern Unit benefits from an adjustable height range, easy-to-use up/down buttons, and weight-loading fold-up arms, offering flexible toileting for users of different heights, ages, and requirements.

The Rise & Fall Cistern Unit which enables the user to adjust the pan height, incorporates fold-up support arms, and houses the concealed cistern with built-in dual push button flush.

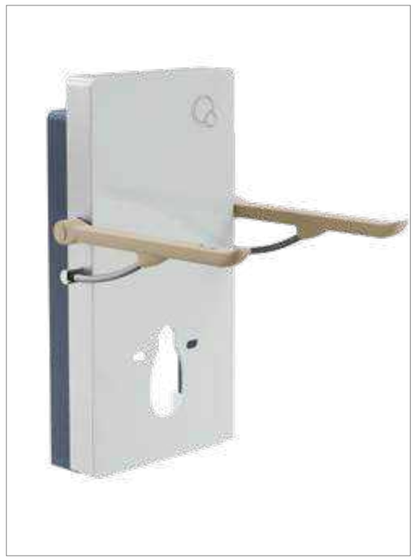

Features & Benefits

- Rise & Fall Cistern Unit can be adjusted with a flexible height range of approximately 200mm
- Easy-to-use up/down buttons on right-handed arm raise and lower the toilet pan to users' individual requirements, ideal for those living in multi-generational or multi-user households
- Flexible height settings enable safer and easier side transfers on/off wheelchairs, shower chairs and commodes
- Rounded edges and corners reduce the risk of injury in the event of a trip or fall
- The Rise & Fall Cistern Unit can support 60st (400kg) to cater to a wide variety of users
- Fold-up arms enable greater access when completing side transfers, with friction preventing a hard drop
- Arms can support up to 18.8st (120kg) each and can be utilised to help users with safely navigating around the bathroom
- Fully compliant, concealed cistern keeps unsightly pipework hidden for a more streamlined look
- Dual push button flush offers full (6 litre) and reduced flush options for increased performance and water efficiency
- Unit features a toughened safety glass front for peace of mind, with a stylish chrome/plastic flush, and taupe arms
- Components individually packaged in recyclable materials to prevent damage during transit

Product Code

Rise & Fall Cistern Unit	**28403**

Geberit AquaClean Mera Care

Design meets function, the Geberit AquaClean Mera Care incorporates a simple to use shower, dryer and odour extraction. Easy to operate and virtually touch-free, it provides you with an all-round cleaner, more comfortable and more hygienic experience. It will leave you feeling clean, fresh and improve your sense of well-being.

Features & Benefits

+ Extending spray arm will wash you with a gentle, oscillating jet of warm water
+ The water temperature (along with other features) can be adjusted providing a pleasant experience, even for the most sensitive skin
+ The lady spray setting also provides advanced cleaning for feminine hygiene
+ Unpleasant odours will barely have time to circulate the room due to the efficient, built-in odour extraction that is activated as soon as you sit down
+ After washing, it will gently and quietly dry you with a flow of warm air; drying is completed in seconds – leaving you feeling clean, fresh and confident
+ The spray nozzle is rinsed with fresh water before and after each use, ensuring spotless cleanliness at all times
+ Can be easily fitted, even in wet rooms

SANITARYWARE

SANITARYWARE & BRASSWARE WASH & DRY TOILETS & BIDETS

Geberit AquaClean Mera Care Toilet (Technical Information)

Specifications

Colour	White
Protection class	I
Protection degree	IPX4
Nominal voltage (V)	230 V AC
Mains frequency (Hz)	50 Hz
Power consumption (W)	2000 W
Power consumption standby (W)	≤ 0.5 W
Flow pressure (bar)	0.5–10 bar
Flow pressure (kPa)	50–1000 kPa
Operating temperature (°C)	5–40 °C
Water temperature, adjustment range (°C)	34–40 °C
Flush volume, factory setting (l)	6 and 4 l
Air volume flow rate, dryer (m³/h)	6 m³/h
Air volume flow rate, odour extraction (m³/h)	6 m³/h
Calculated flow rate (l/s)	0.03 l/s
Flow rate, anal shower (l/min)	1.1–2.0 l/min
Minimum flow pressure for calculated flow rate (bar)	0.5 bar
Flow rate, lady shower (l/min)	0.4–0.7 l/min
Minimum flow pressure for calculated flow rate (kPa)	50 kPa
Washing time per activation	30–50 s
Maximum load WC seat (kg)	190 kg
Geberit AquaClean Mera Care must be connected to a mains water supply	

Product Code

Geberit AquaClean Mera Care	**23864**

Dimensions (mm)

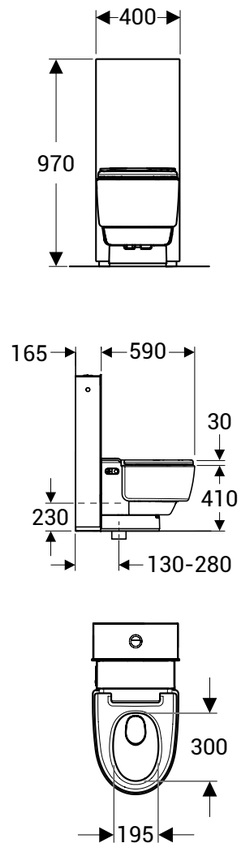

SANITARYWARE

Closomat Palma Vita & Palma Life™

Closomat Palma Vita™ - Features & Benefits

+ Unique 'hands free' system operates the Palma Vita's flushing, warm water washing & warm air drying functions by just pressing & releasing the elbow pad
+ Simultaneous flushing & washing feature improves personal hygiene as it cleans with water not paper
+ Improved personal hygiene, cleaning with water
+ Can be used at all times as a conventional WC
+ Combines a WC & bidet with the addition of drying air
+ Aesthetically pleasing design including telescopic skirt to cover plinth & a continuous bowl cover
+ User-friendly system guarantees the most hygienic toilet performance
+ UK made in a dedicated factory
+ Customised to suit individual needs
+ Installation & service support available
+ 1 year guarantee
+ Load Capacity: 190kg/30stone

Closomat Palma Life™ – Features & Benefits

+ A Closomat automatic flushing shower toilet with 10 years' fully comprehensive, hassle-free maintenance cover for one simple price
+ Palma Life™ has been developed as a result of feedback from the healthcare marketplace
+ Palma Life™ meets the pressures faced by Local Authorities & Housing Associations when it comes to funding & as such the Palma Life™ helps to ease the burden
+ Put simply, when a Palma Life™ wash & dry shower toilet is purchased your client is receiving a top quality product with a decade of peace of mind

Product Code

Palma Vita Standard Spray Douche Arm	**04C01**
Palma Vita Extended Spray Douche Arm	**04C02**
Palma Vita Extended Twin Spray Douche Arm	**04C03**
Palma Life Standard Spray Douche Arm	**04C05**
Palma Life Extended Spray Douche Arm	**04C06**
Palma Life Extended Twin Spray Douche Arm	**04C07**
Closomat - Extended Service Warranty - UK	**04CW-UK**

How it works

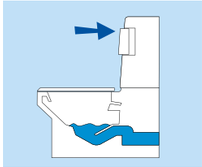

Flushing

Press either elbow pad whilst standing for conventional flush.

Washing

Press elbow pad whilst seated and hold down for approximately 10-15 seconds, flushing and warm water washing will then take place.

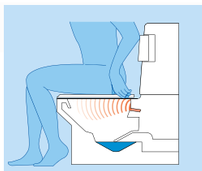

Drying

Warm air drying automatically follows when elbow pad is released.

Accessories are available, please visit orders.akw-ltd.co.uk

SANITARYWARE

Sanitaryware

Our sanitaryware has been specially developed for users with reduced mobility. Our products are strong, reliable, stylish and comfortable, and there is a wide range to choose from:

+ Navlin Range
+ Livenza Plus Range
+ Livenza Range
+ Ergonomic Range

Navlin Close-Coupled Pan, Cistern & Toilet Seat

navlin

The Navlin close-coupled WC is designed to feel at home in any 21st century bathroom, with a modern aesthetic and fully compliant cistern.

Featuring a clever rimless toilet pan which improves hygiene levels by reducing the number of hard-to-reach areas where germs can thrive, Navlin WCs are available with complementary seats and flush options to expertly cater to a variety of needs.

AKW Navlin and Navlin Doc M sanitaryware ranges have been designed with compatibility in mind, allowing you to create a contemporary bathroom that expertly caters to a variety of needs.

Navlin Close-Coupled WC with Raised Push Button Flush & Carbamide Seat

Navlin Close-Coupled WC with Lever Flush & Carbamide Seat

Features & Benefits

- Standard and raised-height pan options available
- Rimless toilet pan with direct flushing technique offers improved hygiene levels by reducing the build-up of bacteria and making cleaning easier
- Pan can support up to 60st (400kg) to cater to a wide variety of users
- Rounded edges and corners reduce the risk of injury in the event of a trip or fall
- BS EN 997 approved toilet pan for guaranteed flush performance
- Two contemporary seat options - Carbamide model offers extra strength and durability, with our polypropylene PP seat a stylish, cost-effective solution - both feature soft-close hinges which are slower, quieter and safer for users, and support up to 23.5st (150kg)
- Cistern available with a raised push button or spatula lever flush, both of which can be easily operated by hand, closed fist or elbow
- Optional sensor flush valve offers contact-free flush operation and is available separately; this must be ordered alongside the Navlin Cistern with Raised Push Button Flush and installed in place of the button flush mechanism/valve

- Lever flush can be installed left or right-handed
- Cisterns with lever or raised push button flush mechanisms offer full (6 litre) and reduced flush options for increased performance and water efficiency
- Cistern is fitted with a top-fill inlet valve that has an all-round air gap which fully complies with current UK Water Regulations
- Overflow pipe is 300mm above pan rim, fully complying with current UK Water Regulations
- Bottom inlet water connection simplifies pipework
- Horizontal outlet waste connection for easy installation and maintenance
- Includes easy-to-secure, two-point, side-entry floor fixings which reduce the build-up of dust and bacteria, are easy to clean, and are supplied with white cosmetic caps to prevent rusting
- Supplied with fixing kit as standard
- Pan, seat and cistern (inc. flush mechanism) supplied separately
- Components individually packaged in recyclable materials to prevent damage during transit

Product Codes

Navlin Standard-Height Close-Coupled Toilet Pan	**23571**
Navlin Raised-Height Close-Coupled Toilet Pan	**23570**
Navlin Cistern with Raised Push Button Flush	**23574**
Navlin Doc M Cistern with Lever Flush & Screw-Down Lid	**23594**
Carbamide Soft-Close Toilet Seat with Lid	**23588**
PP Soft-Close Toilet Seat with Lid	**23589**

i For Plumbing Fittings (see **page 545**)

Dimensions (mm)

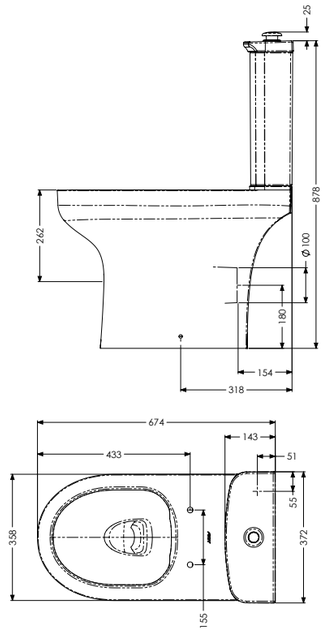

Navlin Standard-Height Close-Coupled Toilet Pan & Cistern with Raised Push Button Flush

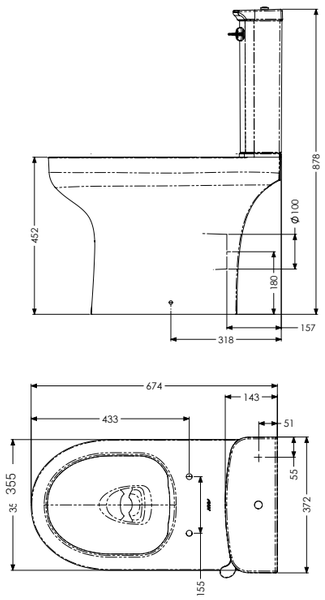

Navlin Raised-Height Close-Coupled Toilet Pan & Cistern with Lever Flush

Navlin Back-to-Wall Toilet Pan

navlin

The Navlin back-to-wall toilet pan has been designed to offer an ultra-minimalist aesthetic and can be installed independently or with our range of contemporary AKW bathroom furniture.

Featuring a fully compliant concealed cistern and a clever rimless toilet pan which helps to improve hygiene, the Navlin back-to-wall toilet pan is available with two seat options and a recessed flush button.

AKW Navlin and Navlin Doc M sanitaryware ranges have been designed with compatibility in mind, allowing you to create a contemporary bathroom that expertly caters to a variety of needs. Is also suitable for Low-Level installations.

Navlin Back-to-Wall Toilet Pan with Carbamide Seat

Features & Benefits

+ Rimless toilet pan with direct flushing technique offers improved hygiene levels by reducing the build-up of bacteria and making cleaning easier
+ Pan can support up to 60st (400kg) to cater to a wide variety of users
+ Rounded edges and corners reduce the risk of injury in the event of a trip or fall
+ BS EN 997 approved toilet pan for guaranteed flush performance
+ Two contemporary seat options - Carbamide model offers extra strength and durability, with our polypropylene PP seat a stylish, cost-effective solution - both feature soft-close hinges which are slower, quieter and safer for users, and support up to 23.5st (150kg)
+ Designed for use with a concealed cistern, which keeps unsightly pipework hidden for a more modern, streamlined look
+ Compatible with AKW fitted bathroom furniture, with all WC units including a cistern and recessed flush button
+ Can be installed as a low-level WC with the addition of a low-level cistern and flush pipe

LIFETIME WARRANTY — On pan, cistern & seat

10 YEAR WARRANTY — On flush fittings

WRAS APPROVED PRODUCT — On cistern fittings

UK CA | CE

SANITARYWARE NAVLIN RANGE

+ Low-level cistern offers full (6 litre) and reduced flush options to increase performance and water efficiency
+ Horizontal outlet waste connection for easy installation and maintenance
+ Includes easy-to-secure, two-point, side-entry floor fixings which reduce the build-up of dust and bacteria, are easy to clean, and are supplied with white cosmetic caps to prevent rusting
+ Supplied with fixing kit as standard
+ Pan, seat, concealed cistern (inc. flush mechanism) or low-level cistern (inc. flush mechanism) supplied separately; cistern and recessed push button flush are supplied with all AKW WC units within our bathroom furniture range
+ Components individually packaged in recyclable materials to prevent damage during transit

Product Codes

Navlin Standard-Height Back-to-Wall Toilet Pan	**23572**
Navlin Low-Level Cistern with Raised Push Button Flush & Flush Pipe	**23549**
Navlin Doc M Low-Level Cistern with Lever Flush & Flush Pipe	**23559**
Dudley Miniflo Cistern	**28179**
Carbamide Soft-Close Toilet Seat with Lid	**23588**
PP Soft-Close Toilet Seat with Lid	**23589**

Dimensions (mm)

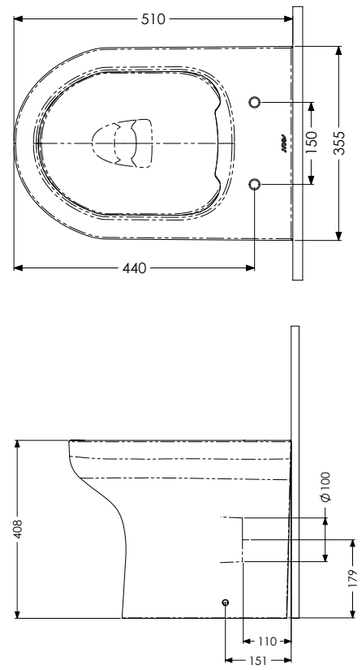

For the raised-height version.
See Navlin Doc M **page 485**.

SANITARYWARE

Navlin Wall-Hung Toilet Pan

navlin

The Navlin wall-hung toilet pan has been designed to offer an ultra-minimalist bathroom aesthetic which features a rimless pan for increased hygiene.

A stylish soft-close seat as well as the Geberit Duofix Frame with Kappa Cistern, and Kappa Flush Plate are available separately.

AKW Navlin and Navlin Doc M sanitaryware ranges have been designed with compatibility in mind, allowing you to create a contemporary bathroom that expertly caters to a variety of needs.

Navlin Wall-Hung Toilet Pan with Soft-Close Toilet Seat for Navlin Wall-Hung Pan

Features & Benefits

- Wall-hung pan offers a minimalist and modern aesthetic that creates the illusion of space and enables easier cleaning
- Rimless toilet pan with direct flushing technique offers improved hygiene levels by reducing the build-up of bacteria and making cleaning easier
- Pan can support up to 60st (400kg) to cater to a wide variety of users
- Rounded edges and corners reduce the risk of injury in the event of a trip or fall
- BS EN 997 approved toilet pan for guaranteed flush performance
- Contemporary Carbamide plastic seat and lid can support up to 23.5st (150kg) and benefits from soft-close hinges which are slower, quieter, and safer for users
- Designed for use with a concealed, wall-hung frame and integrated cistern which keeps unsightly pipework hidden for a streamlined look
- Compatible with standard wall-hung frames
- Horizontal outlet waste connection for easy installation and maintenance
- Supplied with fixing kit as standard
- Pan, seat, concealed cistern frame and flush plate supplied separately
- Components individually packaged in recyclable materials to prevent damage during transit

LIFETIME WARRANTY — On pan & seat

10 YEAR WARRANTY — On flush fittings

UK CA | CE

SANITARYWARE NAVLIN RANGE

Product Codes

Navlin Wall-Hung Toilet Pan	**23573**
Soft-Close Toilet Seat for Navlin Wall-Hung Pan	**23645**
Geberit Duofix Wall-Hung Frame & Kappa Cistern	**23515**
Geberit Flush Plate Chrome Kappa 20	**23516**
Geberit Flush Plate White Kappa 20	**23517**

Dimensions (mm)

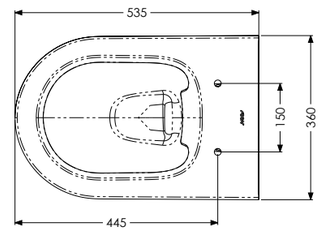

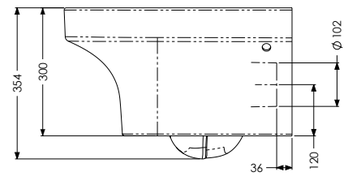

i Is compatible with AKW Rise & Fall Cistern Unit (see **page 413**)

SANITARYWARE

Sensor Flush

The Sensor Flush uses infrared sensors to detectmotion above the cistern and flushes the toilet in response. This automatic function reduces the need for physical contact, which is not only more hygienic for the user but is also considerably easier for those with limited dexterity to operate.

Available separately, the sensor flush is compatible with Navlin and Livenza Plus cisterns with raised push-button flush operation and can be easily installed in place of the push button mechanism.

Features & Benefits

- Infrared sensor detects movement and operates flush valve as required
- Offers more hygenic, contact-free flushing compared to traditional lever or button flushes, making it ideal for use in multi-user environments
- Hands-free operation can be utilised by those with limited dexterity, and can be easily used with a hand, closed fist or elbow
- Infrared symbol on sensor indicates contact-free use
- Sensor is located in the centre of the cistern lid for non-handed use
- Low-depth external sensor is easy to clean with fewer crevices which could harbour dust, dirt and bacteria
- Battery operated yet flush can still be used if the batteries expire, simply press down like a button flush

WRAS APPROVED PRODUCT — On cistern fittings

UK CA CE

3 YEAR WARRANTY — On electronic sensor

10 YEAR WARRANTY — On flush fittings

Product Codes

Navlin Cistern with Raised Push Button Flush	**23574**
Livenza Plus Cistern with Raised Push Button Flush	**23902**
Sensor Flush	**28404**

SANITARYWARE NAVLIN RANGE

Dimension (mm)

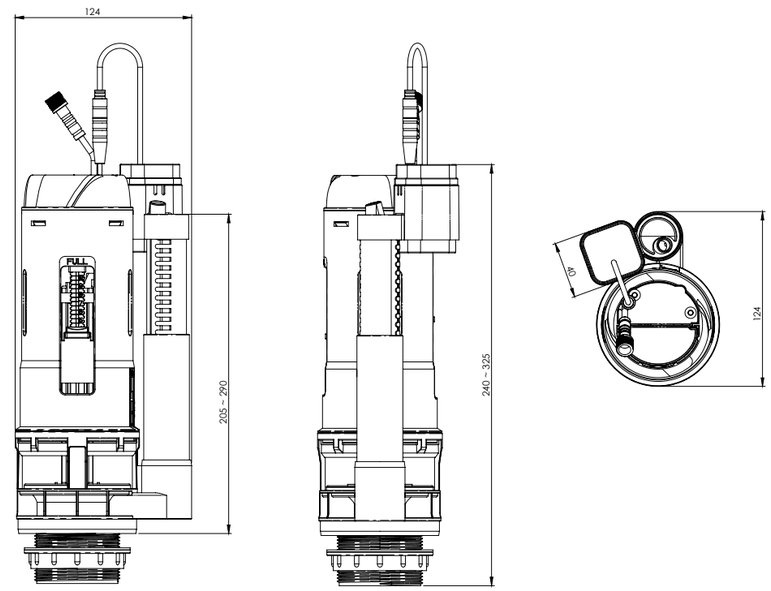

Sensor Flush Valve

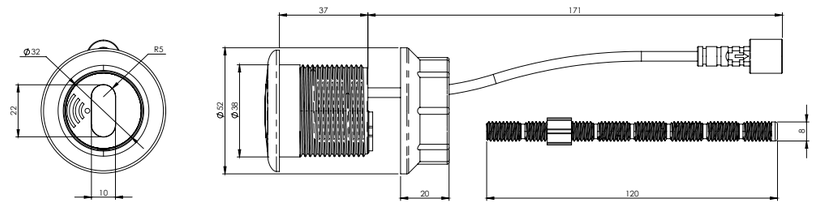

Sensor Flush Button

SANITARYWARE

Navlin Wash Basin

navlin

From our Navlin collection of stylish sanitaryware comes a selection of wash basins with one or two tap holes, and a choice of semi or full-height pedestals.

AKW Navlin and Navlin Doc M sanitaryware ranges have been designed with compatibility in mind, allowing you to create a contemporary bathroom that expertly caters to a variety of needs.

One Tap Hole Wash Basin

Two Tap Hole Wash Basin

LIFETIME WARRANTY

Features & Benefits

- Available in three widths: 450mm, 500mm & 550mm
- Contemporary yet functional design, with a level, easy-clean tap deck
- Rounded edges and corners reduce the risk of injury in the event of a trip or fall
- Choice of one or two tap holes, allowing for the use of basin or mixer taps
- One tap hole basins allow for the use of either a clicker waste or a plug and chain waste plus anchor point option, both of which are available separately
- Two tap hole basins feature a chain stay hole, with plug and chain waste available separately
- Supplied with fixing kit as standard
- For additional support, a wash basin bracket is available separately

Product Codes

Navlin Wash Basin 450mm 1 Tap Hole	**23576**
Navlin Wash Basin 500mm 1 Tap Hole	**23578**
Navlin Wash Basin 550mm 1 Tap Hole	**23580**
Navlin Wash Basin 450mm 2 Tap Hole	**23577**
Navlin Wash Basin 500mm 2 Tap Hole	**23579**
Navlin Wash Basin 550mm 2 Tap Hole	**23581**
Clicker Waste	**23385**
Plug and Chain Anchor Waste	**18-003-032**

SANITARYWARE

SANITARYWARE NAVLIN RANGE

Dimension (mm)

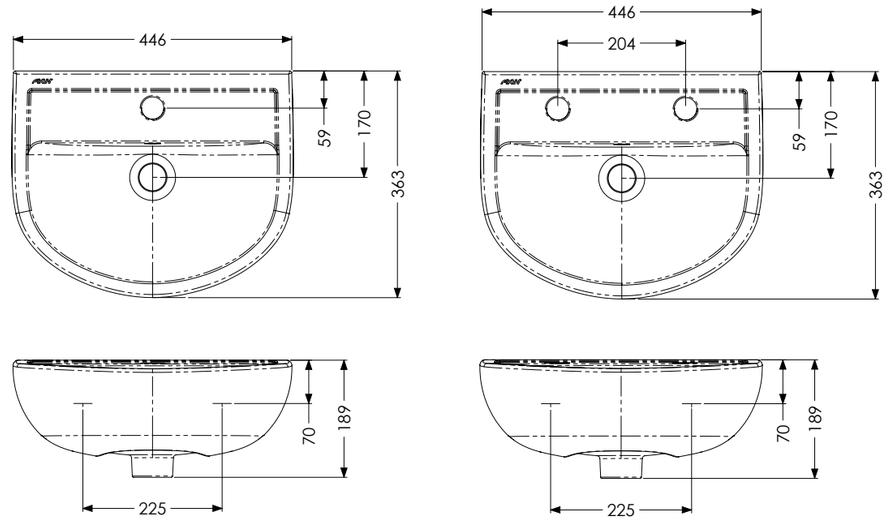

Navlin 450mm Wash Basin One Tap Hole

Navlin 450mm Wash Basin Two Tap Holes

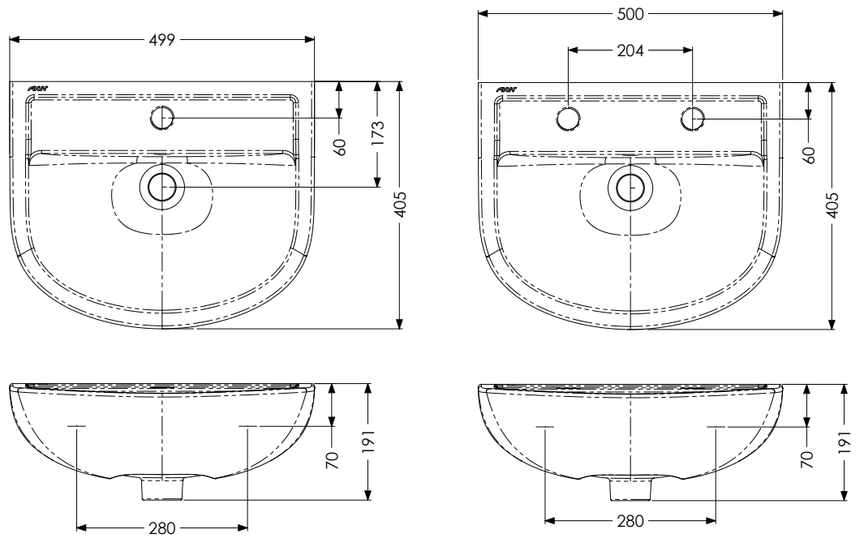

Navlin 500mm Wash Basin One Tap Hole

Navlin 500mm Wash Basin Two Tap Holes

SANITARYWARE

Dimension (mm)

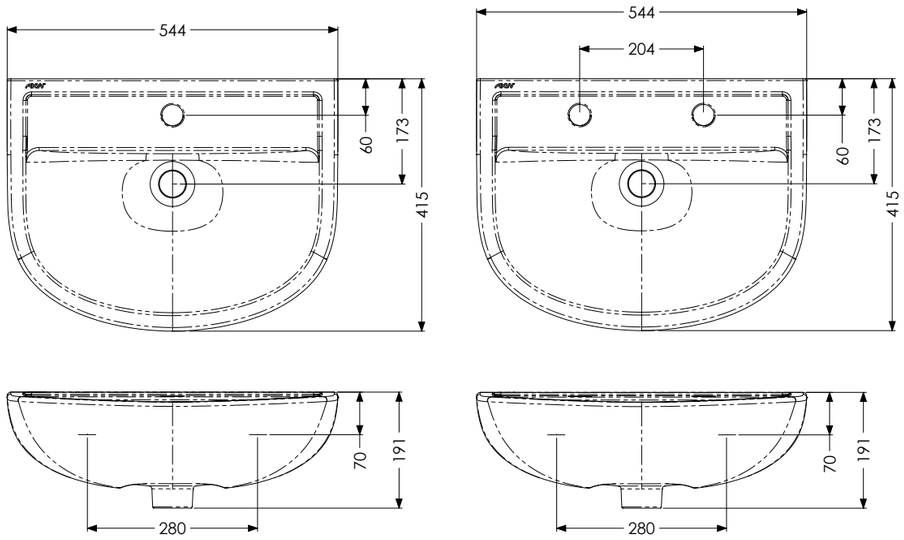

Navlin 550mm Wash Basin One Tap Hole

Navlin 550mm Wash Basin Two Tap Holes

SANITARYWARE

Navlin Wash Basin Pedestals

navlin

Pedestals

- Choice of semi or full pedestal which perfectly complement the Navlin range of wash basins
- Ultra-stylish semi pedestal design gives the illusion of greater space and allows for much easier cleaning, whilst also providing closer access for seated or wheelchair users
- Fixing kit supplied with semi pedestal to provide ease of installation
- Full pedestal design provides a more traditional aesthetic, offers greater stability, and cleverly conceals plumbing
- Pedestal, waste and taps supplied separately
- Components individually packaged in recyclable materials to prevent damage in transit

Navlin Semi Pedestal	**23587**
Navlin Full-Height Pedestal	**23586**

LIFETIME WARRANTY

Semi Pedestal

Full Pedestal

Dimension (mm)

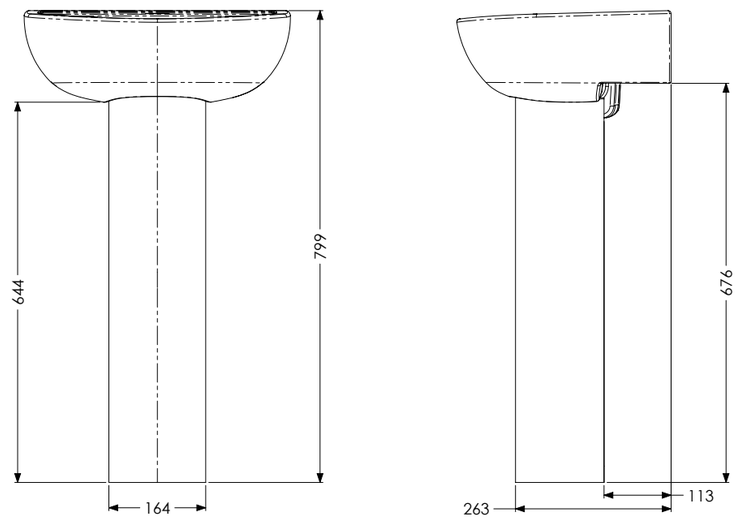

SANITARYWARE

Dimension (mm)

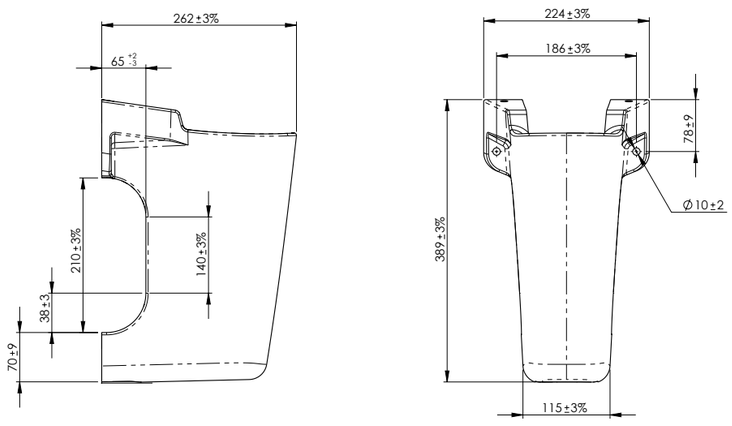

Navlin Semi Pedestal

Navlin Corner Wash Basin

navlin

Designed to utilise space in a bathroom or washroom, the wall-mounted Navlin Corner Wash Basin features one tap hole and is finished with a stylish, curved front.

AKW Navlin and Navlin Doc M sanitaryware ranges have been designed with compatibility in mind, allowing you to create a contemporary bathroom that expertly caters to a variety of needs.

Features & Benefits

- Compact corner design is ideal for bathrooms and washrooms with limited space
- Level tap deck that is functional and easy to clean
- Rounded edges and corners reduce the risk of injury in the event of a trip or fall
- Wall-mounted installation gives the illusion of greater space and allows closer access for seated or wheelchair users, where possible
- One tap hole, suitable for use with a mixer basin tap, compatible taps are available separately
- Allows for the use of a clicker waste or plug with chain anchor waste, both of which can be purchased separately
- Components individually packaged in recyclable materials to prevent damage in transit
- Recommended for use with a 5 l/min flow limiter

Product Codes

Navlin Corner Wash Basin	**23548**
Clicker Waste	**23385**
Plug and Chain Anchor Waste	**18-003-032**

LIFETIME WARRANTY

Dimensions (mm)

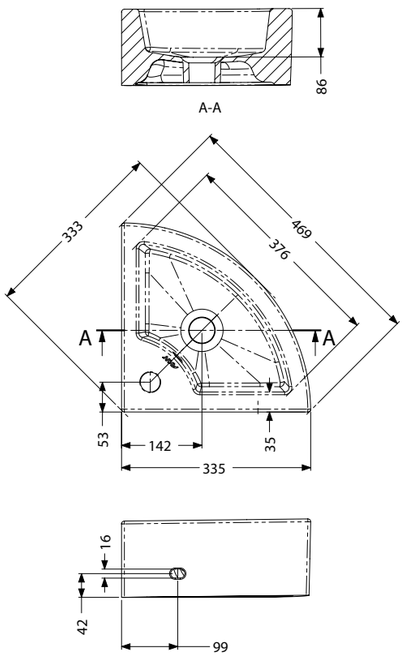

SANITARYWARE

Livenza Plus Close-Coupled Pan and Cistern

Livenza Plus

The stylish Livenza Plus WC has been designed to complement any bathroom look; it also features a rimless toilet pan, fully compliant cistern, and offers a choice of seat options and offers a choice of seat and flush options.

Features & Benefits

- A rimless toilet pan offers improved hygiene levels by preventing the build up of bacteria and making the pan easier to clean.
- Rounded edges and corners minimise the risk of injury in the event of a trip or fall.
- 3/6 litre flush options for increased performance and water efficiency.
- Available with either a raised push button or lever flush, both of which ensure the WC can be easily operated by hand or with a closed fist or elbow.
- Bottom inlet water entry to simplify pipework.
- Cistern is fitted with a top-fill inlet valve that has an all round air gap which fully complies with the current water regulations.
- Horizontal outlet for easy installation and maintenance.
- Includes easy-to-secure floor fixings and matching white caps to prevent rusting.
- BS EN 997 approved toilet pan for guaranteed flush performance.
- Choice of two contemporary seat options, both featuring soft-close mechanisms which are slower, quieter and safer for users.
- PP seat provides a stylish, lower-cost option; Carbamide seat is made from extra strong plastic, offering a tougher, more durable seat.
- Pan, seat and cistern (inc. flush mechanism) supplied separately.
- Overflow pipe has been increased to 300mm to fully comply with current water regulations.

LIFETIME WARRANTY
10 years on flush fittings

UK CA | CE

Livenza Plus Seat Covers see **page 467**

Livenza Plus Close-Coupled Pan, Cistern & Seat (Technical Information)

Product Codes

Livenza Plus close-coupled WC (p trap)	**23901**
Livenza Plus cistern and raised push button flush mechanism	**23902**
Livenza Plus cistern and lever flush mechanism	**23916**
Carbamide Soft-Close Toilet Seat with Lid	**23588**
PP Soft-Close Toilet Seat with Lid	**23589**

Dimensions (mm)

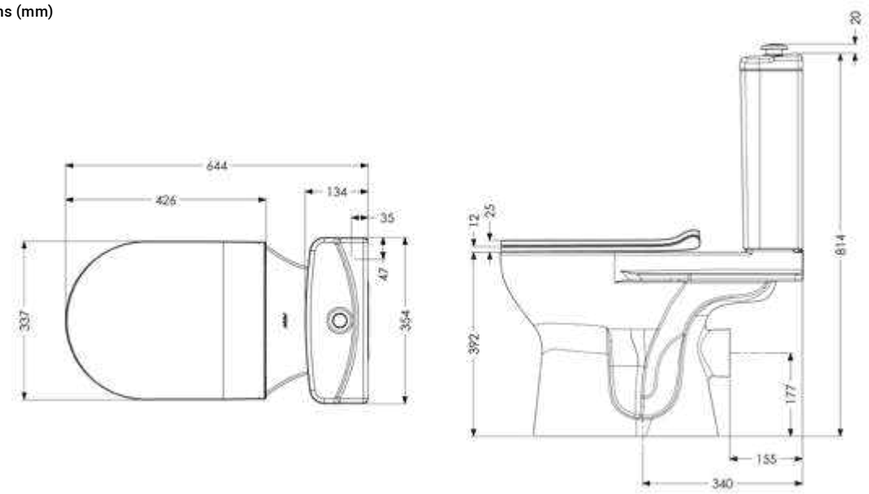

Livenza Plus close-coupled WC with raised push button flush

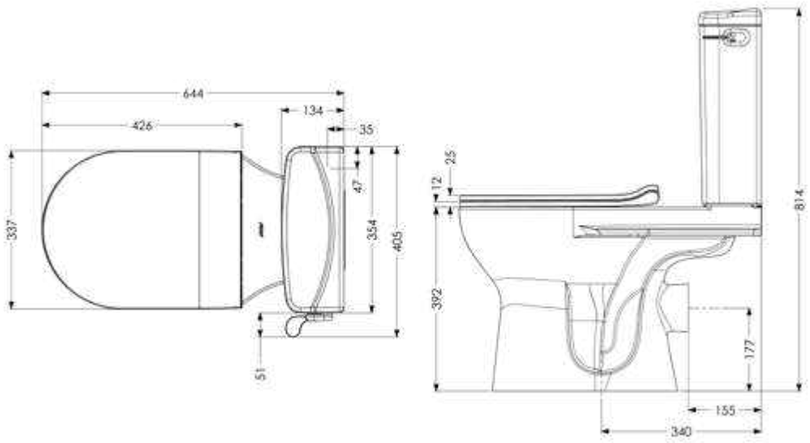

Livenza Plus close-coupled WC with lever flush

SANITARYWARE

Livenza Plus Basin

Livenza Plus

Livenza Plus wash basins are designed to be both practical and beautiful; available in three widths with the choice of semi or full pedestal to provide stability and conceal unsightly pipework.

Features & Benefits

- Available in three widths: 450mm, 500mm & 550mm
- Rounded edges and corners minimise the risk of injury in the event of a trip or fall
- Choice of 1 or 2 tap holes, allowing for the use of basin or mixer taps
- Contemporary yet functional design, with a flat tap deck providing a level surface which is easy to clean
- 1 tap hole basins allow for the use of either a clicker waste, or plug and chain anchor waste, both of which are available to purchase separately
- 2 tap hole basins feature a chain stay hole, with plug and chain anchor waste available to purchase separately

Product Codes

Livenza Plus wash basin 450mm 1 tap hole	**23907**
Livenza Plus wash basin 450mm 1 tap with chain-stay	**23907CS**
Livenza Plus wash basin 450mm 2 tap hole	**23912**
Livenza Plus wash basin 500mm 1 tap with chain-stay	**23903CS**
Livenza Plus wash basin 500mm 1 tap hole	**23903**
Livenza Plus wash basin 500mm 2 tap hole	**23913**
Livenza Plus wash basin 550mm 1 tap hole	**23908**
Livenza Plus wash basin 550mm 1 tap with chain-stay	**23908CS**
Livenza Plus wash basin 550mm 2 tap hole	**23914**
Clicker Waste	**23385**
Plug and Chain Anchor Waste	**18-003-032**

1 tap hole, semi pedestal

2 tap hole, semi pedestal

1 tap hole, full pedestal

2 tap hole, full pedestal

SANITARYWARE

Livenza Plus Basin (Dimensions)

Dimensions (see table)

Note: Please allow least a ±10mm manufacturing tolerance on dimensions

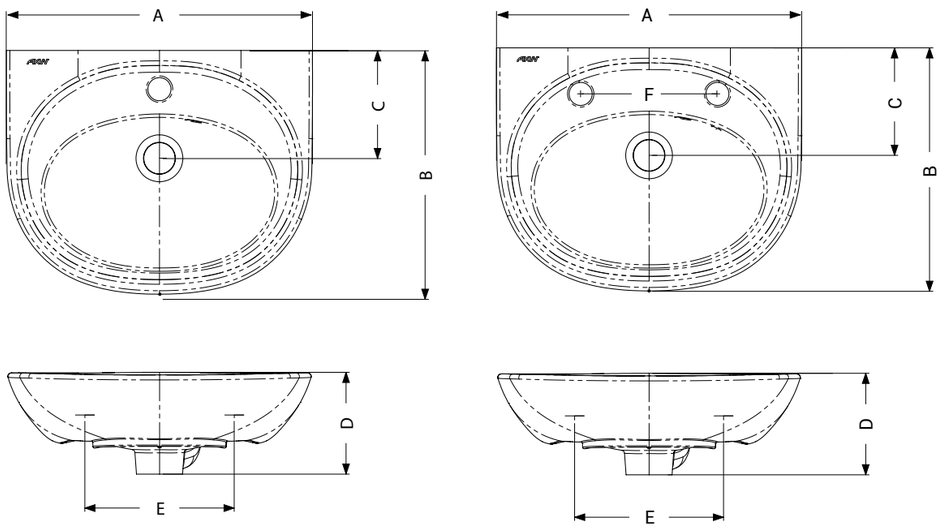

450mm wash basin

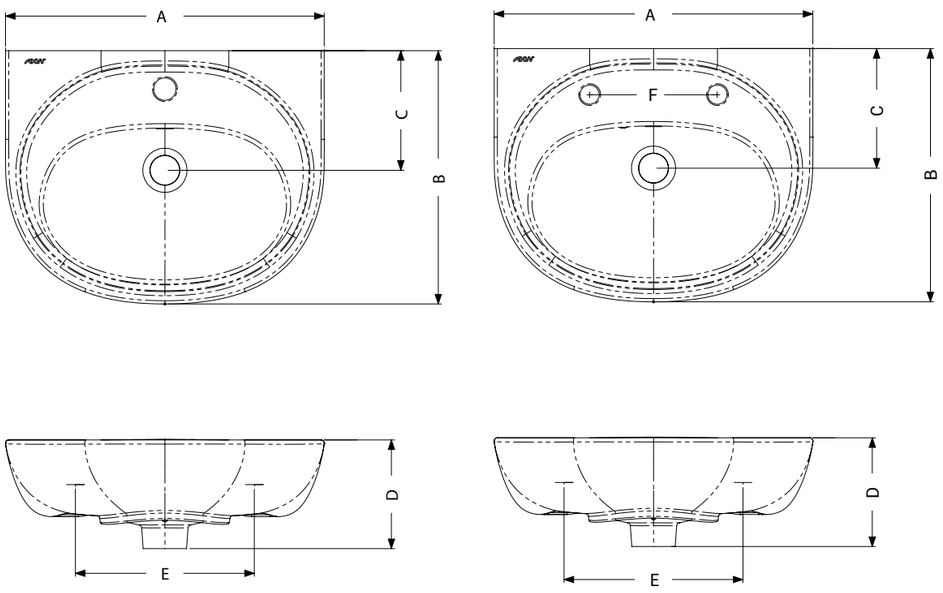

500mm wash basin

Livenza Plus Basin (Dimensions)

Dimensions (see table)

Note: Please allow least a ±10mm manufacturing tolerance on dimensions

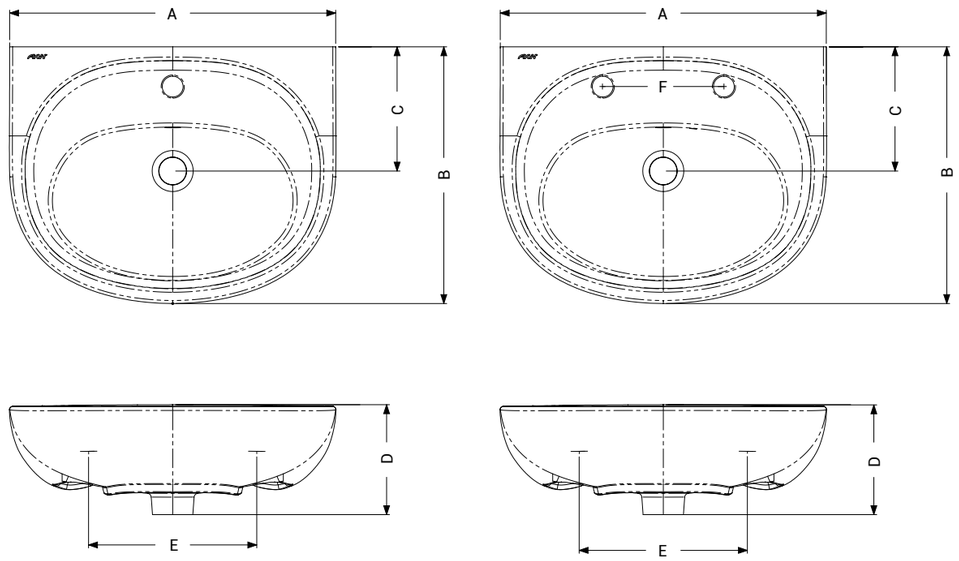

550mm wash basin

Product	Volume	A Width	B Depth	C Distance to waste	D Height	E Fixing holes	F Distance to taps
450mm basin 1 tap hole	1.7 Litres	450mm	365mm	160mm	150mm	220mm	n/a
450mm basin 2 tap hole	1.7 Litres	450mm	365mm	160mm	150mm	220mm	200mm
500mm basin 1 tap hole	2.8 Litres	500mm	395mm	185mm	170mm	280mm	n/a
500mm basin 2 tap hole	2.8 Litres	500mm	395mm	185mm	170mm	280mm	200mm
550mm basin 1 tap hole	4.5 Litres	550mm	430mm	185mm	185mm	280mm	n/a
550mm basin 2 tap hole	4.5 Litres	50mm	430mm	185mm	2185mm	280mm	200mm

Livenza Plus Pedestal

Livenza Plus

Features & Benefits

+ Choice of either semi or full pedestal which perfectly complement the Livenza Plus range of wash basins
+ Standard double-ended bolts supplied with the semi pedestal to provide ease of installation for competent tradespeople
+ Ultra stylish semi pedestal design gives the illusion of greater space, allows for much easier cleaning and convenience, whilst also providing closer access for seated or wheelchair users
+ Full pedestal design provides a more traditional aesthetic, offers greater stability, and cleverly conceals plumbing
+ Pedestal, waste and taps supplied separately

Product Codes

Livenza Plus semi pedestal	**23915**
Livenza Plus full pedestal	**23909**
Livenza Plus petite height full pedestal	**23920**

Semi pedestal

Full pedestal

LIFETIME WARRANTY

UK CA | CE

Livenza Plus Full Pedestal (Dimensions)

Dimensions (mm)

Note: Please allow least a ±10mm manufacturing tolerance on dimensions

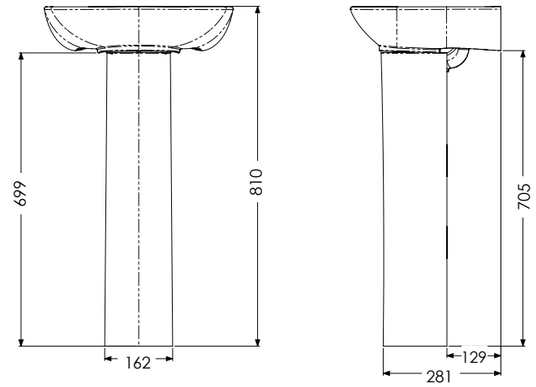

Full pedestal for 450mm wash basin

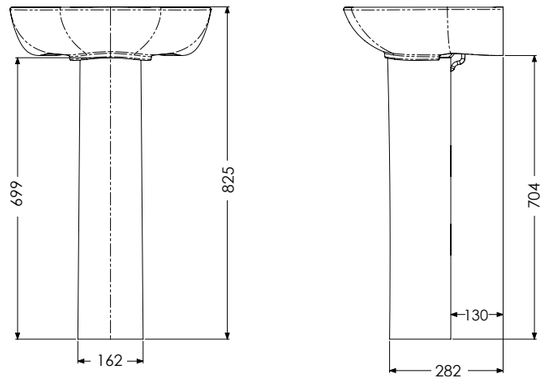

Full pedestal for 500mm wash basin

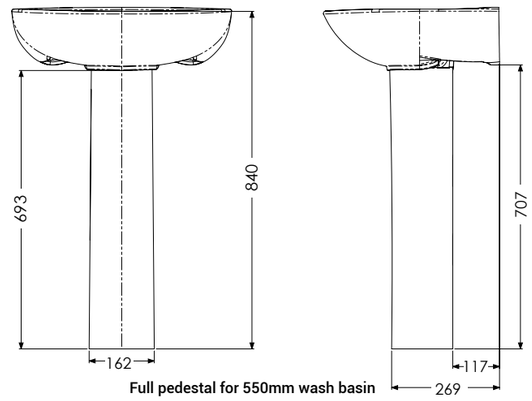

Full pedestal for 550mm wash basin

Livenza Plus Semi Pedestal (Dimensions)

Dimensions (mm)

Note: Please allow least a ±10mm manufacturing tolerance on dimensions

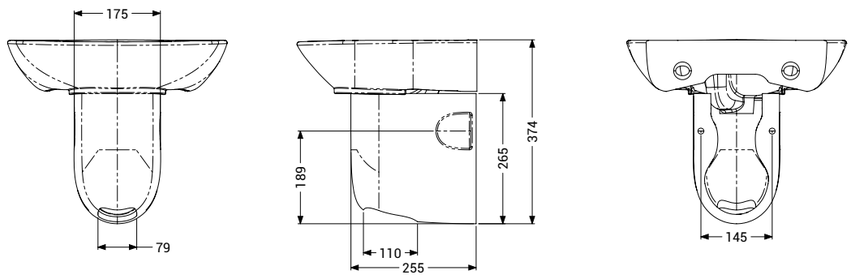

Semi pedestal for 450mm wash basin

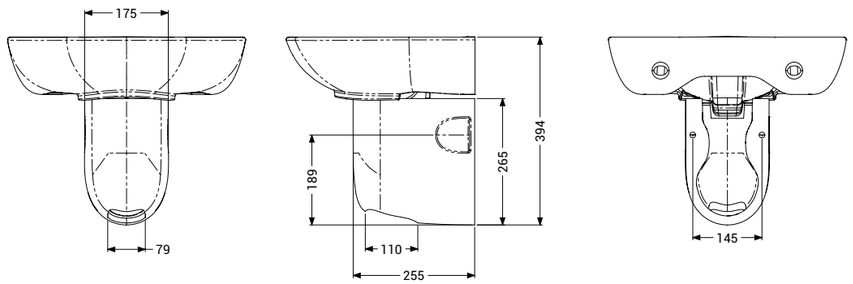

Semi pedestal for 500mm wash basin

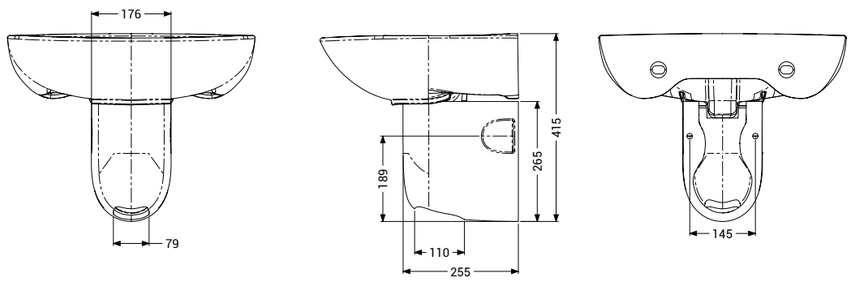

Semi pedestal for 550mm wash basin

Livenza Standard Close - Coupled Toilet Pan, Cistern and Seat

Features & Benefits

- Rounded edges and corners for safety
- 3/6 litre flush for water efficiency
- Chrome push-button dual flush
- Bottom inlet tank
- Exposed outlet for easy fitting and maintenance
- WRAS-approved flush fittings included
- Complies with BS EN 997 ensuring flush performance
- Matching wrap-over seat available
- Lifetime guarantee against manufacturer's defects in ceramics
- 10-year guarantee on flush fittings

Product Codes

Standard Close-Coupled Toilet Pan	**23501**
Cistern Tank for Close-Coupled Toilet Pan	**23502**
Seat for Close-Coupled Toilet Pan	**23505**

Dimensions (mm)

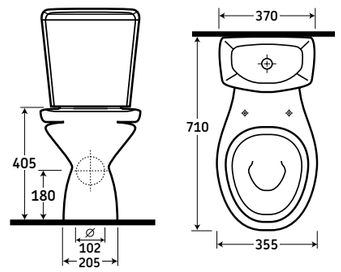

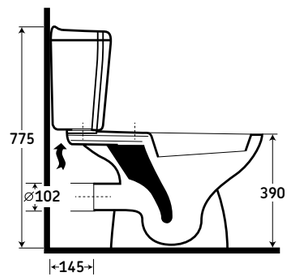

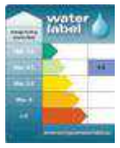

BS EN 997

Also see Toilet Waste Connectors – see **page** 552

Livenza Standard-Height Wall-Hung Toilet Pan and Seat

Features & Benefits

+ Rounded edges and corners for safety
+ Standard 102mm diameter outlet for easy plumbing
+ Complies with BS EN 997 ensuring flush performance
+ Matching wrap-over seat available
+ Compatible with standard wall-hung frames
+ Market leading Geberit Wall-Hung Fixing (product code 23515) available (see **page 461**)
+ Lifetime guarantee against manufacturer's defects in ceramics
+ 10-year guarantee on flush fitting
+ Not compatible with ergonomic toilet seat
+ Weight limited to 63 stone / 400kg

Dimensions (mm)

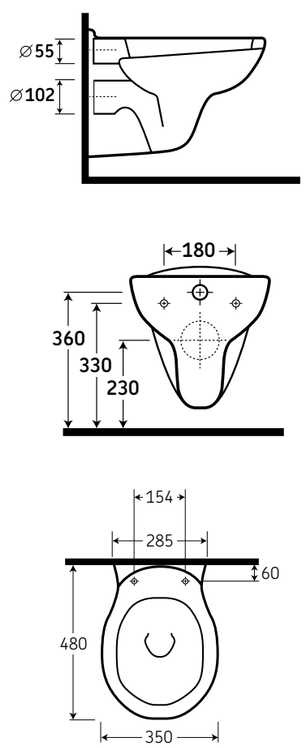

Product Codes

Livenza Wall-Hung Toilet Pan	**23518**
Seat for Livenza Wall-Hung Toilet Pan	**23519**

BS EN 997

Geberit Kappa Duofix Wall-Hung Frame and Cistern

Features & Benefits

+ Can be used in front of solid or drywall construction
+ Self-supporting frame with C profile 40 / 40mm
+ Geberit Kappa concealed cistern for tool-free mounting and fully insulated against condensation
+ Frame height adjustable from 820-1020mm
+ Flush valve allows for 3/6 litre or 3/4.5 litre flush

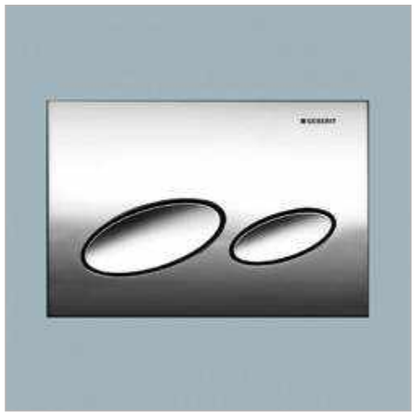

Product Codes

Geberit Duofix Wall Hung Frame and Cistern	**23515**
Geberit Flush Plate Chrome Kappa 20	**23516**
Geberit Flush Plate White Kappa 20	**23517**

Livenza Wash Basin

Features & Benefits

- Available in three widths: 450mm, 500mm and 550mm
- Rounded edges and corners for safety
- Single and double tap holes available on all sizes
- Chrome overflow insert
- No chain-stay to allow use of clicker waste or plug and chain anchor waste
- Chain-stay hole on two tap hole basins
- Matching full or semi pedestal available
- Waste, taps and pedestal supplied separately

Basins:	A	B	C	D	E	Volume	Code:
450 Basin (1 tap hole)	450	365	165	140	220	2 litres	**23507**
450 Basin (2 tap holes)	450	365	165	140	220	2 litres	**23512**
500 Basin (1 tap hole)	500	395	185	155	280	2.5 litres	**23503**
500 Basin (2 tap holes)	500	395	185	155	280	2.5 litres	**23513**
550 Basin (1 tap hole)	550	430	205	170	280	4.5 litres	**23508**
550 Basin (2 tap holes)	550	430	205	170	280	4.5 litres	**23514**

Product Codes

Small Livenza Semi Pedestal (suitable for 450mm and 500mm wash basins)	**23504**
Large Livenza Semi Pedestal (suitable for 550mm wash basins)	**23511**
Full Livenza Pedestal	**23510**
Plug and Chain Anchor waste	**18-003-032**
Clicker waste	**23385**
Basin 1 and 1/4 inch 32mm Bottle Trap White	**08-006-040**
Chrome Bottle Trap	**08-006-038**
Chrome-Plated Brass Waste with Plug	**13-009-030**

Semi Pedestal

Full Pedestal

Dimensions (mm)

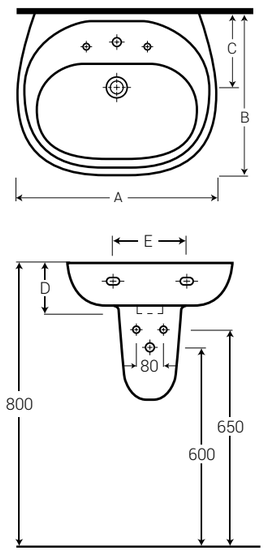

Onyx Ergonomic Wash Basin with Grab Handles

Features & Benefits

- Concaved front to allow closer access to basin and taps
- Ergonomic easy-grip handle for support and stability
- Contemporary synthetic stone design
- Easy-clean surface
- Designed with strength in mind
- One centred tap hole
- Bowl capacity: 5 litres
- Lifetime warranty
- Tested to a maximum load of 23.5 stone / 150kg
- Allows a wheelchair user more accessibility
- Handles provide support for users in the bathroom
- Wheelchair users can pull themselves towards the wash basin
- Clicker waste available separately

Product Codes

Ergonomic Wash Basin with Hand Grip Supports 600x490x140mm	**11870-LS**
Clicker Waste	**23385**

Dimensions (mm)

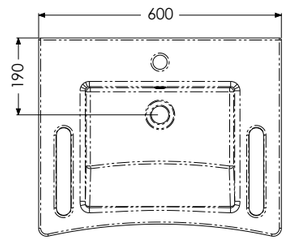

Ergonomic Concave Doc M Wash Basin

Features & Benefits

- Ergonomically designed for wheelchair, walking frame or perching stool users
- Concaved front for closer access to basin and taps
- 600mm (w) x 420mm (d)
- Supplied with plug and chain
- Includes waste trap and shroud as standard
- Semi and full pedestal options available
- Volume capacity: 3 litres
- Supplied with a plug and chain

Product Codes

Ergonomic Concave Doc M Wash Basin (with Semi Pedestal)	**23115**
Ergonomic Concave Doc M Wash Basin (with Full Pedestal)	**23115-FP**

Semi Pedestal

Full Pedestal

Dimensions (mm)

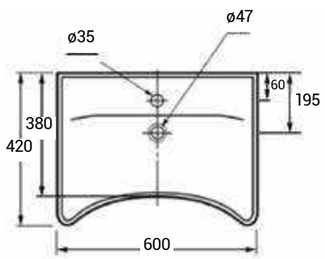

Salonex Hairdresser Basin

Features & Benefits

- Two tapholes, no chainstay hole or overflow, hairdressers basin mixer, waste, trap and support brackets provided
- The curved design has been created for a comfortable hair washing experience
- Two tap holes are provided at 200mm centres
- The two tap holes facilitate easy installation of a mixer tap plus a small handheld shower
- Suitable for a care home setting / health & welfare centres
- Wall-mounted installation
- Manufactured from Vitreous china
- Vitreous china to BS 3402
- Colour: White finish
- Metal and Plastic Bottle Traps
- Salonex Basin and Mixer Kit includes: Salonex Hairdresser Basin, Hairdresser Mixer & Kit, 1.25 inch Waste with Life Grid, 1.25 inch x 75mm Seal Bottle Trap, Salonex Alloy Brackets

Product Codes

Hairdresser Basin and Mixer Kit	**23569**

Dimensions (mm)

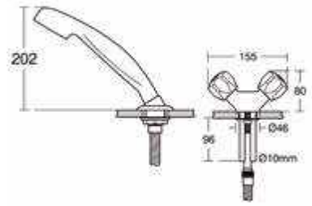

Wash Basin Fixing Brackets

Features & Benefits

+ Made from stainless steel for durability
+ Choice of three size brackets to provide a solution for most sizes of wash basin
+ This product gives more flexibility on install as it has twelve fixing holes on the 220mm and 280mm bracket and thirteen fixing holes on the adjustable bracket
+ The extra fixing holes make it easier to execute a secure installation as the load is distributed
+ Welded bolts attached to the bracket enable easy mounting of the wash basin (see illustrations below)
+ The studs have M8 threads, nuts not supplied

Wash Basin Adjustable Wall Mounting Bracket 200-300mm

Wash Basin Wall Mounting Bracket 220mm

Product Codes

Wash Basin Wall Mounting Bracket 220mm	**23921**
Wash Basin Wall Mounting Bracket 280mm	**23922**
Wash Basin Adjustable Wall Mounting Bracket	**23923**
AKW Sanitaryware Basin to Wall Fixing Kit	**23897**
AKW Sanitaryware Cistem to Wall Fixing Kit	**23894**

PP & Carbamide Toilet Seats

Soft-close plastic seat covers designed for use with Navlin and Livenza Plus sanitaryware.

Features – PP Seat

+ Soft-close mechanism which is slower, quieter and safer for users
+ Manufactured from polypropylene for strength
+ Stylish, cost-effective solution
+ Available in white

Features – Carbamide Seat

+ Soft-close mechanism which is slower, quieter and safer for users
+ Manufactured from extra strong urea, offering a tougher, more durable seat
+ Stylish solution

PP seat

Carbamide seat

Product Codes

PP plastic seat cover with soft-close hinges	**23589**
Carbamide plastic seat cover with soft-close hinges	**23588**

i Compatible with Livenza Plus sanitaryware – see **page 451**

i Compatible with Navlin, Livenza Plus and Doc M toilet pans

Ergonomic Toilet Seat

Features & Benefits

- Strong metal hinges and seat lugs provide extra stability, ensuring safe and secure side transfers to/from wheelchairs
- Ergonomic, shaped seat design is contoured for maximum user comfort
- Can be installed on existing toilet pans
- Available in white, blue, dark blue and mid-grey, with darker colours offering sufficient contrast for visually impaired users or those with dementia
- Available with or without a lid
- Soft-close hinges are slower, quieter, and therefore safer for users
- Easy to install and maintain
- Weight limited to 47st / 300kg

Product Codes

Ergonomic Toilet Seat with Lid – White	23122
Ergonomic Toilet Seat without Lid – White	23123
Ergonomic Toilet Seat with Lid – Blue	23124
Ergonomic Toilet Seat without Lid – Blue	23125
Ergonomic Toilet Seat with Lid – Dark Blue	23124DB
Ergonomic Toilet Seat without Lid – Dark Blue	23125DB
Ergonomic Toilet Seat with Lid – Mid Grey	23124MG
Ergonomic Toilet Seat without Lid – Mid Grey	23125MG

White

Blue

Dark Blue

Mid-Grey

LIFETIME WARRANTY

SANITARYWARE

Toilet Plinth

Features & Benefits

- White
- Raises heights of existing toilet pans for easy access and side transfer

Product Codes

25mm High GRP Toilet Plinth	**25048**
38mm High GRP Toilet Plinth	**25045**
50mm High SMC Toilet Plinth	**25042S**
59mm High GRP Toilet Plinth for Livenza Plus	**23924**
75mm High SMC Toilet Plinth	**25044S**
100mm High SMC Toilet Plinth	**25043S**

100mm High SMC Toilet Plinth

59mm High GRP Livenza Plus Toilet Plinth

Dimensions (mm)

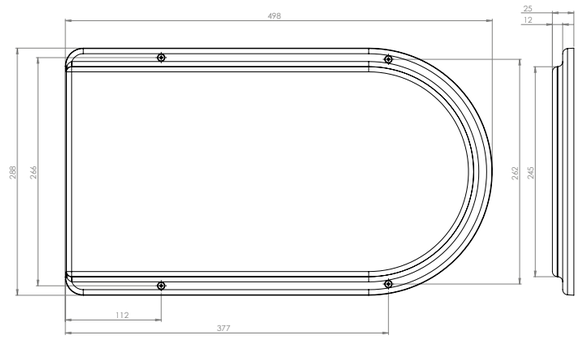

25mm High GRP Toilet Plinth

SANITARYWARE

Dimensions (mm)

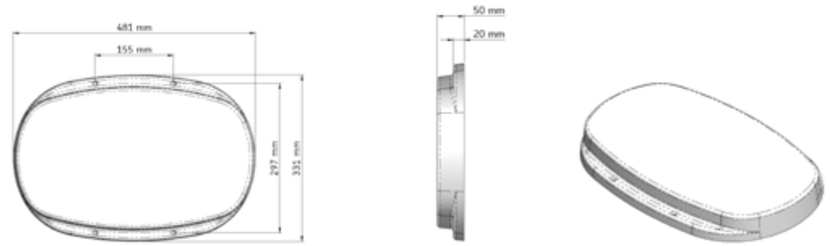

50mm High SMC Toilet Plinth

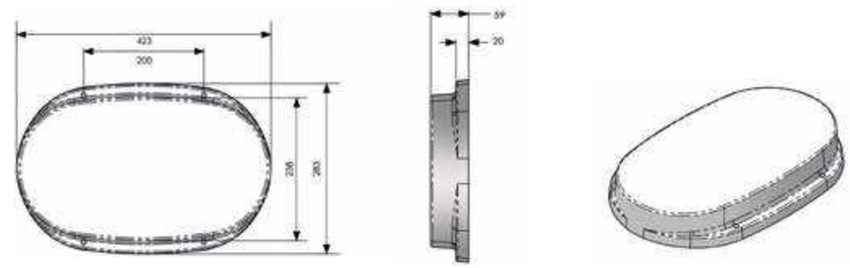

59mm High GRP Toilet Plinth

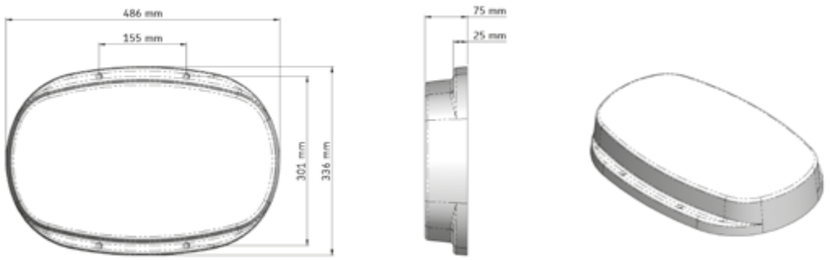

75mm High SMC Toilet Plinth

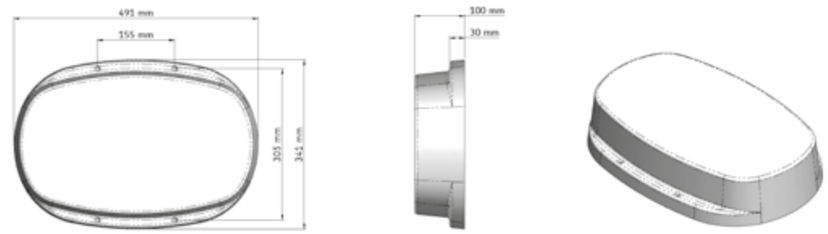

100mm High SMC Toilet Plinth

Brassware

AKW's brassware is easy to install, easy to use and comes with a lifetime guarantee, giving you timeless style and total piece of mind.

Lever Wash Basin Taps (Pair)

Features & Benefits

+ Stylish chrome finish
+ The 50mm lever design provides a smooth and controlled 90° turn operation (easy to operate with a hand or an arm, for users with limited dexterity)
+ Easy and quick installation
+ Coloured temperature indicator ring on taps
+ Minimum working pressure 0.2 bar

Product Code

Lever Wash Basin Taps (Pair)	**23196CH**

LIFETIME WARRANTY | WRAS APPROVED PRODUCT

i See Flexi Hoses in Plumbing section **page 548**

Dimensions (mm)

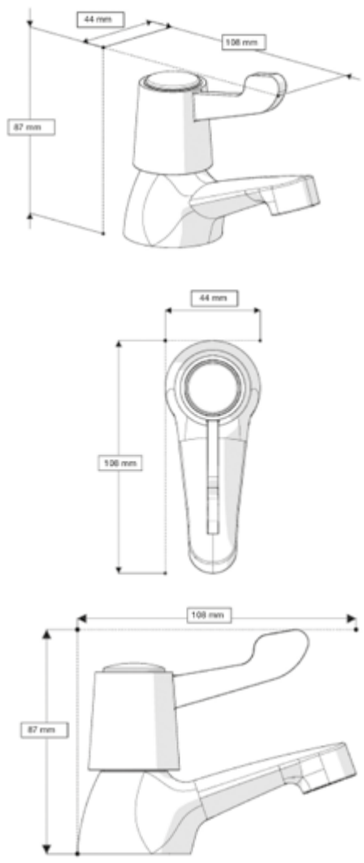

Uses ½ BSP connection

AKW Denova® Wash Basin Taps (Pair)

Features & Benefits

+ 1/2" quarter turn
+ 5l/m flow limiter
+ Colour temperature indicator on handles

Product Code

AKW Denova® Wash Basin Taps (Pair)	**23189**

LIFETIME WARRANTY | WRAS APPROVED PRODUCT

i See Flexi Hoses in Plumbing section **page 548**

Dimensions

SANITARYWARE

TMV3 Thermostatic Wash Basin Mixer Tap

The TMV3 thermostatic mixer tap has an extended lever for easy operation using a closed fist or elbow.

Features & Benefits

+ TMV3 approved to prevent scalding
+ Integrated mixer valve for improved hygiene
+ Polished chrome finish
+ Lever 80mm

Product Code

Thermostatic Wash Basin Mixer Tap	**23116A**

Dimensions (mm)

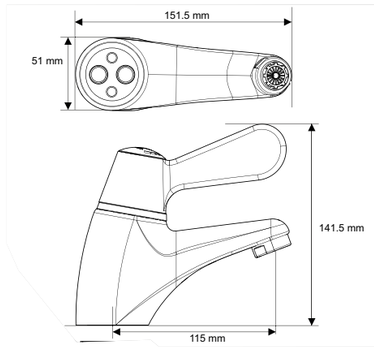

LIFETIME WARRANTY | TMV3 Certified | NSF Certified to NSF TMV3 | Doc M

AKW Denova® Mono Wash Basin Mixer Tap

Features & Benefits

+ 35mm eco cartridge
+ Flexible hose
+ Chrome-plated brass clicker waste
+ 5 l/m flow limiter

Product Code

Denova Mono Wash Basin Mixer Tap	**23316**

Dimensions (mm)

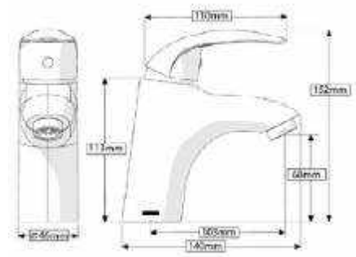

LIFETIME WARRANTY | WRAS APPROVED PRODUCT | water label

See Flexi Hoses in Plumbing section **page 548**

Monobloc Spray Wash Basin Mixer Tap

Features & Benefits

+ For use with one or two tap hole wash basins
+ Polished chrome finish
+ Easy to install
+ User-friendly, long handle (lever 70mm)
+ Flexible hose

Product Code

Monobloc Spray Wash Basin Mixer Tap	**23118**

Dimensions (mm)

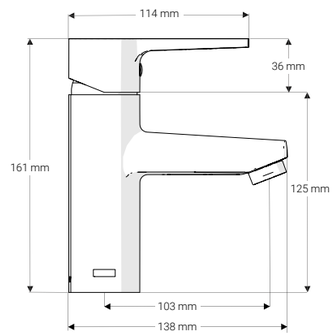

LIFETIME WARRANTY

See Flexi Hoses in Plumbing section **page 548**

SANITARYWARE

Peg Lever Basin Taps

Stylish chrome-plated peg lever basin taps offers a classic yet contemporary finish to any bathroom suite.

Features & Benefits

+ Classic design
+ Polished chrome finish
+ Engineered for long life and service
+ Easy to service and maintain
+ Peg levers make it simple to operate

Product Codes

Peg Lever Basin Taps (Pair)	**30822**

Specifications

Colour / Finish: Chrome plated

Ceramic Disc Technology

Controls: Peg Lever zinc handles

Material: Brass Internals

Pressure requirements – Min: 0.2 Bar

WRAS approved

Dimensions (mm)

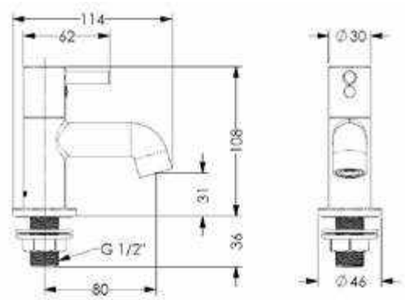

LIFETIME WARRANTY

Excludes limescale

WRAS APPROVED PRODUCT

See Flexi Hoses in Plumbing section **page 548**

SANITARYWARE

½" Dual Lever Mono Mixer Basin Tap

Easy to use dual lever mono mixer basin tap is a chrome finish

Features & Benefits

+ Suitable for all UK Water Authority supply pressures
+ Quarter turn
+ Stylish chrome finish
+ Temperature indicator ring on head of taps
+ Lever design
+ Conforms to the relevant standards and regulations
+ Ease of use for those with limited finger dexterity
+ Aesthetically pleasing and ideal for the modern-day bathroom
+ The top of the tap has a coloured temperature indicator ensuring the end user is aware of the expectant water temperature and reducing the possibility of unforeseen heat on the skin
+ The lever design provides a smooth and controlled 90° turn operation which is easy to operate with hand or arm even if the user has limited dexterity

Specifications

Colour: Chrome
Suitable for: Hot/Cold water
Pop up plug included
Material: Zinc and Brass
Quantity: 1
Item Weight: 0.7kg
Operating Temperature: 0° to 80°
Max Operating Pressure: 20 Bar
Ceramic cartridge
Everything depicted above is included

Product Code

½" Dual Lever Mono Mixer Basin Tap	**23198**

TMV2 and TMV3 Thermostatic 15mm and 22mm Blending

Where vulnerable users are present, our thermostatic blending valves deliver safe, blended hot water to taps, showers, bidets and other water outlets, making it suitable for use in care and domestic environments.

NHS estates: BS7942:2000
BS EN1111 & **BS EN1287:1999**

Against manufacturing defects

Features & Benefits

+ 15 or 22mm blending valve
+ Easy to install
+ Integral check valves and strainers
+ Building regulations Part G compliant
+ Highly resistant to scaling (TMV2 and TMV3 approved)
+ Tamper-resistant head
+ 12-month warranty against manufacturing defects

Product Codes

15mm Thermostatic Blending Valve	**23382**
22mm Thermostatic Blending Valve	**23383**

Plug and Chain Anchor with Waste

The chain stay anchors on to a basin tap rather than requiring sanitaryware with a moulding fixture. It is compatible with all of our sanitaryware.

Features & Benefits

+ Chain anchor point that fixes to taps
+ Traditional Black Plug and Ball Link Chain
+ The plug and chain anchor fits all basins, rather than only basins with a built-in anchor point
+ Research suggests using a traditional plug and chain waste is more dementia friendly

Product Code

Plug and Chain Anchor with Waste	**18-003-032**

Chrome Plated Brass Waste with plug

Product Code	
Chrome Plated Brass Waste with plug	**13-009-030**

Clicker waste

Product Code	
Clicker Waste	**23385**

For Basin Traps see Plumming Fittings **page 467**

Doc M

AKW offer numerous different Doc M packs, allowing you to make the right choice for the space available and the needs of the building's users. Each pack has been designed for maximum comfort, ease-of-use, and comes with recommendations for how and where products should be installed to ensure compliance.

Download our Doc M brochure here:

Doc M

Close-Coupled, Standard, or Low-Level Doc M Packs 1-8

Plan View

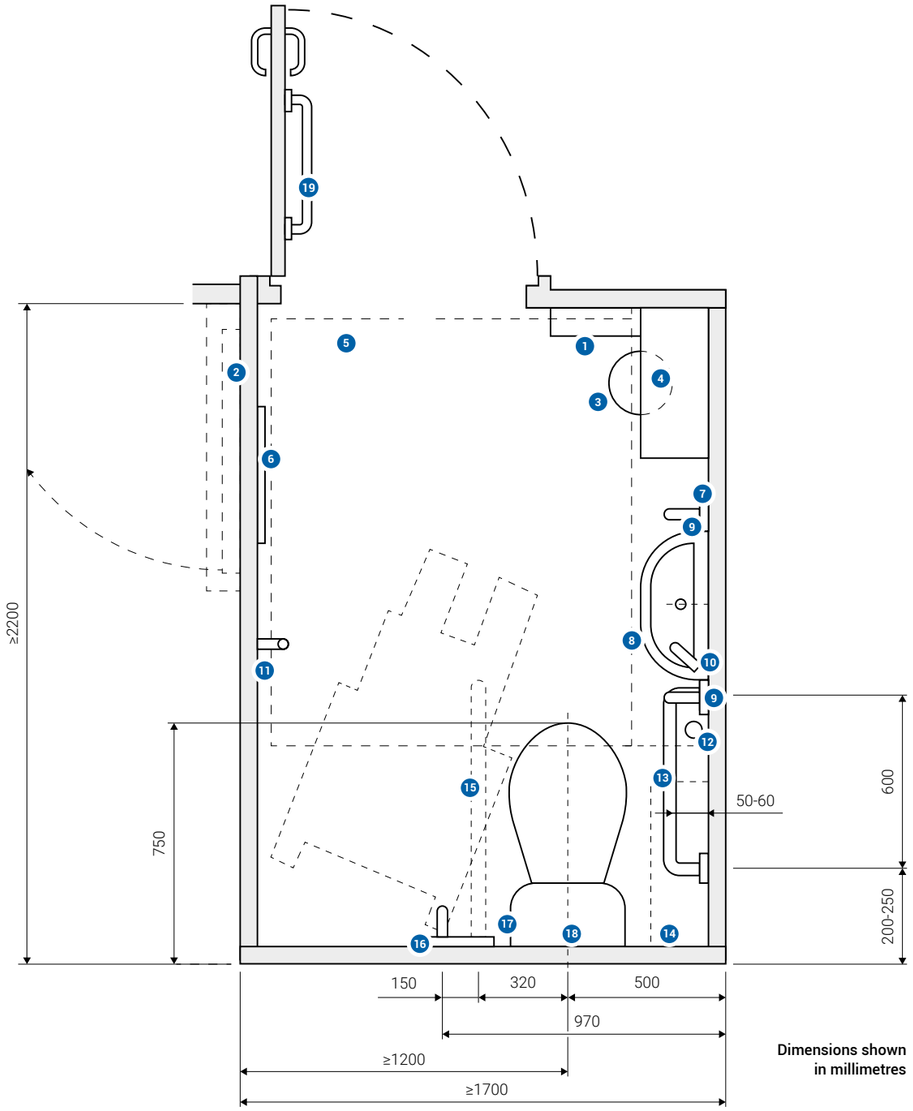

Dimensions shown in millimetres

Key

1. Sanitary dispenser
2. Alternative door position
3. Waste disposal bin
4. Shelf, installed 760mm above finished floor level
5. Wheelchair turning space (1500x1500mm)
6. Long mirror
7. Wall A (see side view)
8. Wash basin, this should project no further than 250mm from wall
9. Vertical grab rails
10. Mixer tap, installed on side of basin nearest WC
11. Two clothes hooks, installed 1050mm and 1400mm above finished floor level
12. Alarm pull cord
13. Horizontal grab rail
14. Sanitary disposal unit
15. Fold-up support rail
16. Vertical grab rail
17. Flush mechanism, installed on side of cistern furthest from wall
18. Flat-topped, close-coupled cistern, provides back rest and colostomy bag changing surface for standing users *
19. Horizontal pull rail on outward-opening door

* Where low-level cisterns are used, a rail with padded back rest should be provided, and a colostomy bag changing shelf installed 950mm above finished floor level.

NOTE: Examples shown are for right-handed transfer to WC.

DOC M PACK 1-10

Close-Coupled, Standard, or Low-Level Doc M Packs 1-8

Side View

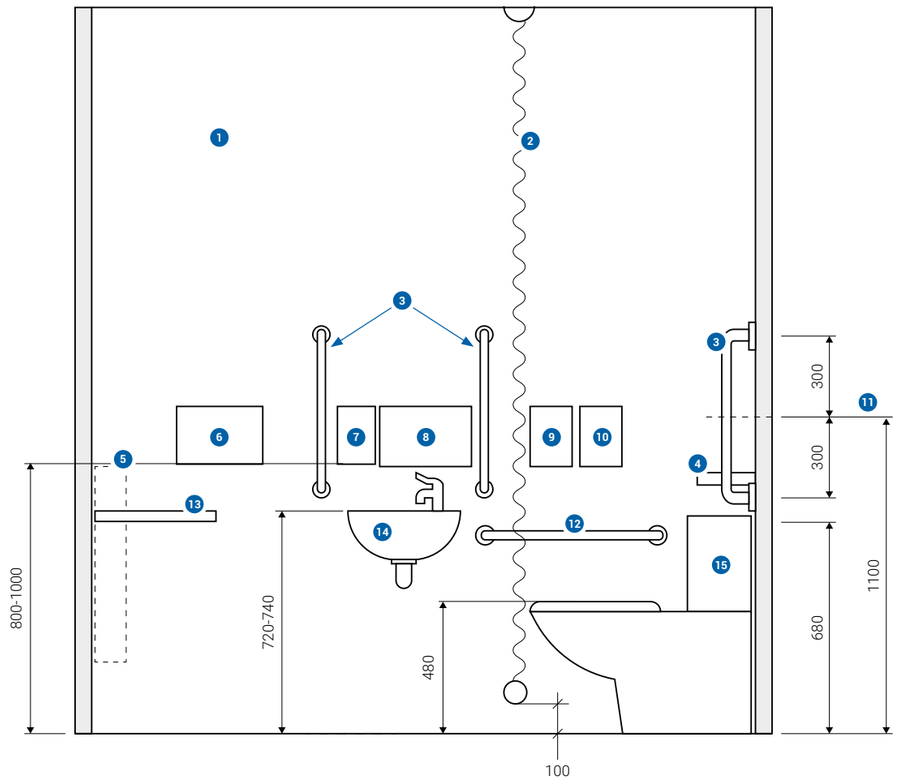

Dimensions shown in millimetres

Key

1. Wall A (see plan view)
2. Alarm pull cord with two red bangles
3. Vertical grab rails installed above wash basin 500-700mm apart with basin positioned centrally below
4. Colostomy bag changing shelf, installed 950mm above finished floor level *
5. Sanitary dispenser, installed on wall adjacent to door, with coin slot positioned 750-1000mm above finished floor level
6. Automatic hand dryer
7. Soap dispenser
8. Paper towel dispenser
9. Toilet tissue dispenser
10. Alarm reset button
11. Centre of vertical grab rails should be 1100mm
12. Horizontal grab rail
13. Shelf, installed 760mm above finished floor level
14. Wash basin, mixer tap installed on side of basin nearest WC
15. Flat-topped, close-coupled cistern, provides back rest and colostomy bag changing surface for standing users *

* Where low-level cisterns are used, a rail with padded back rest should be provided, and a colostomy bag changing shelf, installed 950mm above finished floor level.

NOTE: Examples shown are for right-handed transfer to WC.

Peninsular Doc M Pack 9

Plan View

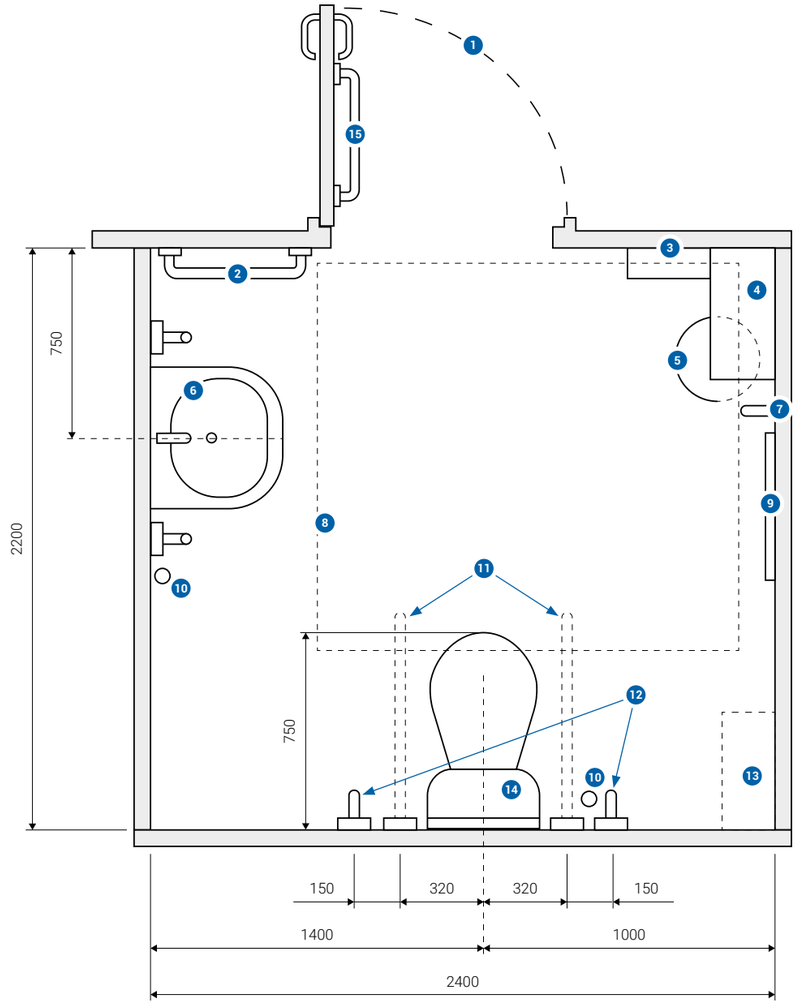

Dimensions shown in millimetres

Key

1. Door, may be installed at any position along wall, but leading edge cannot be less than 300mm from return wall
2. Towel rail
3. Sanitary dispenser
4. Shelf, installed 760mm above finished floor level
5. Waste disposal bin
6. Large wash basin, installed with mirror above and vertical grab rails either side 500-700mm apart
7. Two clothes hooks, installed 1050mm and 1400mm above finished floor level
8. Wheelchair turning space (1500x1500mm)
9. Independent tall mirror
10. Alarm pull cord
11. Fold-up support rails, one with a toilet roll holder
12. Vertical grab rail
13. Sanitary disposal unit
14. Flat-topped, close-coupled cistern, provides back rest and colostomy bag changing surface for standing users *
15. Horizontal pull rail on outward-opening door

* Where low-level cisterns are used, a rail with padded back rest should be provided, and a colostomy bag changing shelf installed 950mm above finished floor level.

Ambulant Doc M Pack 10

Side View

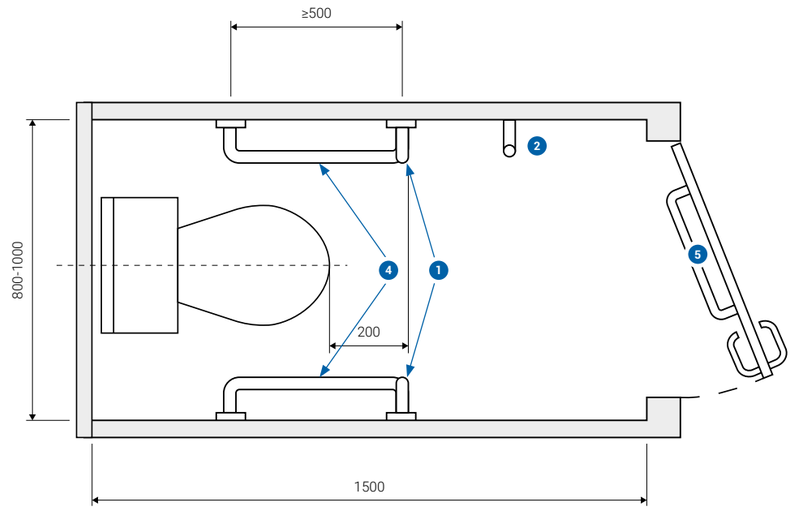

Side View

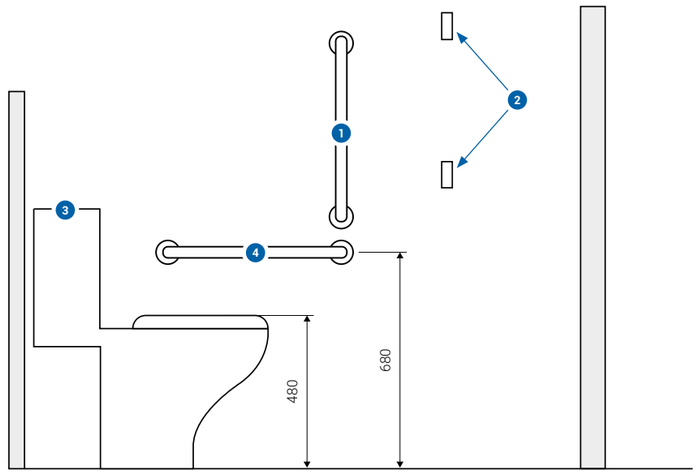

Dimensions shown in millimetres

Key

1. Vertical grab rails
2. Two clothes hooks, installed 1050mm and 1400mm above finished floor level
3. Flat-topped, close-coupled cistern, provides back rest and colostomy bag changing surface for standing users *
4. Horizontal grab rails
5. Horizontal pull rail on outward-opening door

* Where low-level cisterns are used, a rail with padded back rest should be provided, and a colostomy bag changing shelf installed 950mm above finished floor level.

Pack 1: Fully Compliant Close-Coupled Doc M Pack

Doc M

This practical pack contains all the essentials needed to install a fully compliant Doc M washroom, featuring a close-coupled WC with lever flush and 750mm projection, a finger rinse wash basin with thermostatic mixer tap, a selection of grab rails able to support up to 30st (200kg), and our Doc M accessory pack.

5 YEAR WARRANTY — Electrical Warranty
10 YEAR WARRANTY — Flush fittings & fold-up rails
LIFETIME WARRANTY — Sanitaryware (ceramic), toilet seats, brassware, grab rails & accessories
WRAS APPROVED PRODUCT — Cistern fittings & brassware

UK CA | CE

Pack Contents

- Navlin Doc M raised-height, rimless toilet pan with 750mm projection
- Water-saving, close-coupled cistern with spatula lever flush and screw-down lid
- Blue ergonomic toilet seat with lid, soft-close hinges and seat lugs
- Navlin Doc M finger rinse 400mm wash basin with two tap holes
- TMV3 WRAS approved thermostatic mixer tap
- Blue 600mm straight grab rails with uPVC fluted finish x 4
- Blue 450mm straight grab rail with uPVC fluted finish
- Blue fold-up rail with adjustable leg and optional toilet roll holder, finished with an epoxy resin coating and treated with a rust inhibitor
- Doc M accessory pack: small shelf, large shelf, contrasting blue clothes hooks x 2, alarm pull cord, lever-operated soap dispenser, electric hand dryer, paper towel dispenser and toilet tissue dispenser

Product Code

Doc M Pack 1	**28310FBU**

SANITARYWARE

Pack 2: Fully Compliant Low-Level Doc M Pack

Doc M

An alternative to installing a close-coupled WC, this pack includes everything needed to install a fully compliant low-level WC, as well as a finger rinse wash basin with thermostatic mixer tap, a selection of grab rails able to support up to 30st (200kg), and our Doc M accessory pack.

5 YEAR WARRANTY — Electrical Warranty
10 YEAR WARRANTY — Flush fittings & fold-up rails
LIFETIME WARRANTY — Sanitaryware (ceramic), toilet seats, brassware, grab rails & accessories
WRAS APPROVED PRODUCT — Cistern fittings & brassware

UK CA | CE

Pack Contents

- Navlin Doc M raised-height, back-to-wall rimless toilet pan
- Water-saving, low-level cistern with spatula lever flush, screw-down lid and flush pipe
- Blue ergonomic toilet seat with soft-close hinges and seat lugs, without lid
- Blue padded back rest
- Navlin Doc M finger rinse 400mm wash basin with two tap holes
- TMV3 WRAS approved thermostatic mixer tap
- Blue 600mm straight grab rails with uPVC fluted finish x 4
- Blue 450mm straight grab rail with uPVC fluted finish
- Blue fold-up rail with adjustable leg and optional toilet roll holder, finished with an epoxy resin coating and treated with a rust inhibitor
- Doc M accessory pack: small shelf, large shelf, contrasting blue clothes hooks x 2, alarm pull cord, lever-operated soap dispenser, electric hand dryer, paper towel dispenser and toilet tissue dispenser

Product Code

Fully Compliant Low-Level Doc M Pack – Fluted Blue	**28311FBU**

SANITARYWARE

Pack 3: Standard Close-Coupled Doc M Pack

Doc M

This pack includes everything needed to assemble a fully compliant washroom. It features a close-coupled WC with lever flush and 750mm projection, a finger rinse wash basin with Monobloc mixer tap, and a selection of grab rails able to support up to 30st (200kg).

10 YEAR WARRANTY — Flush fittings & fold-up rails

LIFETIME WARRANTY — Sanitaryware (ceramic), toilet seats, brassware, grab rails & accessories

WRAS APPROVED PRODUCT — Cistern fittings & brassware

Pack Contents

- Navlin Doc M raised-height, rimless toilet pan with 750mm projection
- Water-saving, close-coupled cistern with spatula lever flush and screw-down lid
- Ergonomic toilet seat with lid, soft-close hinges and seat lugs (available in blue, white, dark blue or mid-grey)
- Navlin Doc M finger rinse 400mm wash basin with two tap holes
- Monobloc spray mixer tap
- 600mm straight grab rails with either a smooth, epoxy resin coating (available in white, dark blue or mid-grey) or fluted uPVC finish (choose from blue, white, dark blue or mid-grey) x 4
- 450mm straight grab rail with either a smooth, epoxy resin coating (available in white, dark blue or mid-grey) or fluted uPVC finish (choose from blue, white, dark blue or mid-grey)
- Fold-up rail with adjustable leg and optional toilet roll holder, finished with an epoxy resin coating (available in blue, white, dark blue or mid-grey) and treated with a rust inhibitor

Product Codes

Close-Coupled Std Doc M Pack	
Fluted Blue	**28312FBU**
Fluted White	**28312FWH**
Fluted Dark Blue	**28312FDB**
Fluted Mid-Grey	**28312FMG**
Stainless White	**28312SWH**
Stainless Dark Blue	**28312SDB**
Stainless Mid-Grey	**28312SMG**

SANITARYWARE

Pack 4 & 6: Standard Low-Level Doc M Pack

Doc M

An alternative to a close-coupled WC, these packs contain everything needed to install a fully compliant low-level WC, and include a back-to-wall toilet pan with low-level cistern, flush pipe, padded back rest and lever flush, as well as a finger rinse wash basin with mixer tap, and a selection of grab rails able to support up to 30st (200kg).

10 YEAR WARRANTY — Flush fittings & fold-up rails

LIFETIME WARRANTY — Sanitaryware (ceramic), toilet seats, brassware, grab rails & accessories

WRAS APPROVED PRODUCT — Cistern fittings & brassware

Pack Contents

- Navlin Doc M raised-height, back-to-wall rimless toilet pan
- Water-saving low-level cistern with spatula lever flush, screw-down lid and flush pipe
- Ergonomic toilet seat with soft-close hinges and seat lugs, without lid (available in blue or white)
- Padded back rest (available in blue or grey)
- Navlin Doc M finger rinse 400mm wash basin with two tap holes
- Monobloc spray mixer tap (Pack 4)
- 600mm straight grab rails with uPVC fluted finish (available in blue or white) x 4
- 450mm straight grab rail with uPVC fluted finish (available in blue or white)
- Fold-up rail with adjustable leg and optional toilet roll holder, finished with an epoxy resin coating (available in blue or white) and treated with a rust inhibitor

Product Codes Pack 4

Low-Level Std Doc M Pack	
Fluted Blue	**28313FBU**
Fluted White	**28313FWH**

Product Codes Pack 6

Low-Level Std Doc M Pack with TMV3 Mixer Tap	
Fluted Blue	**28315FBU**
Fluted White	**28315FWH**

SANITARYWARE

Pack 5: Standard Close-Coupled Doc M Pack – TMV3

Doc M

This pack includes everything needed to assemble a fully compliant washroom. It features a close-coupled WC with lever flush and 750mm projection, a finger rinse wash basin with thermostatic mixer tap, and a selection of grab rails able to support up to 30st (200kg).

10 YEAR WARRANTY – Flush fittings & fold-up rails

LIFETIME WARRANTY – Sanitaryware (ceramic), toilet seats, brassware, grab rails & accessories

WRAS APPROVED PRODUCT – Cistern fittings & brassware

Pack Contents

- Navlin Doc M raised-height, rimless toilet pan with 750mm projection
- Water-saving, close-coupled cistern with spatula lever flush and screw-down lid
- Ergonomic toilet seat with lid, soft-close hinges and seat lugs (available in blue, white, dark blue or mid-grey)
- Navlin Doc M finger rinse 400mm wash basin with two tap holes
- TMV3 WRAS approved thermostatic mixer tap
- 600mm straight grab rails with either a smooth, epoxy resin coating (available in white, dark blue or mid-grey) or fluted uPVC finish (choose from blue, white, dark blue or mid-grey) x 4
- 450mm straight grab rail with either a smooth, epoxy resin coating (available in white, dark blue or mid-grey) or fluted uPVC finish (choose from blue, white, dark blue or mid-grey)
- Fold-up rail with adjustable leg and optional toilet roll holder, finished with an epoxy resin coating (available in blue, dark blue, mid-grey or white) and treated with a rust inhibitor

Product Codes

Close-Coupled Std Doc M Pack with TMV3 Mixer Tap	
Fluted Blue	**28314FBU**
Fluted White	**28314FWH**
Fluted Dark Blue	**28314FDB**
Fluted Mid-Grey	**28314FMG**
Stainless White	**28314SWH**
Stainless Dark Blue	**28314SDB**
Stainless Mid-Grey	**28314SMG**

SANITARYWARE

Pack 7 & 8: Contemporary Close-Coupled or Low-Level Doc M Pack

Doc M

If achieving a contemporary aesthetic is a key goal when designing your Doc M washroom, then these packs provide all the products you will need. Each pack features either a close-coupled (Pack 7) or low-level (Pack 8) WC with lever flush, a finger rinse wash basin with Monobloc mixer tap, and a selection of grab rails able to support up to 30st (200kg).

10 YEAR WARRANTY – Flush fittings & fold-up rails

LIFETIME WARRANTY – Sanitaryware (ceramic), toilet seats, brassware, grab rails & accessories

WRAS APPROVED PRODUCT – Cistern fittings & brassware

Pack Contents

- Navlin Doc M raised-height, rimless toilet pan with 750mm projection
- Water-saving cistern with spatula lever flush, screw-down lid
- White ergonomic toilet seat with soft-close hinges, seat lugs (Packs 7 & 8), and lid
- Navlin Doc M finger rinse 400mm wash basin with two tap holes
- Monobloc spray mixer tap
- 600mm straight grab rails with a polished stainless-steel finish x 4
- 450mm straight grab rail with a polished stainless-steel finish
- Stainless-steel fold-up rail with adjustable leg and optional toilet roll holder

Product Codes Pack 7

Contemporary Closed-Coupled Doc M Pack – Stainless Steel	**28319SS**

Product Codes Pack 8

Contemporary Low Level Doc M Pack – Stainless Steel	**28316SS**

SANITARYWARE

Pack 9: Peninsular Doc M Pack

Doc M

The Peninsular pack contains the essentials needed to install a fully compliant Doc M washroom, featuring a close-coupled WC with lever flush and 750mm projection, Navlin wash basin with thermostatic mixer tap, a selection of grab rails able to support up to 30st (200kg), and our Doc M accessory pack.

Pack Contents

- Navlin Doc M raised-height, rimless toilet pan with 750mm projection
- Water-saving, close-coupled cistern with spatula lever flush and screw-down lid
- Ergonomic toilet seat with soft-close hinges and seat lugs, without lid (available in blue or white)
- Navlin 550mm wash basin with one tap hole
- TMV3 WRAS approved thermostatic mixer tap
- 600mm straight grab rails with uPVC fluted finish (available in blue or white) x 4
- 450mm straight grab rail with uPVC finish (available in blue or white)
- Fold-up rails with adjustable leg and optional toilet roll holder, finished with an epoxy resin coating (available in blue or white) and treated with a rust inhibitor x 2
- Doc M accessory pack: small shelf, large shelf, contrasting blue clothes hooks x 2, alarm pull cord, lever-operated soap dispenser, electric hand dryer, paper towel dispenser and toilet tissue dispenser

5 YEAR WARRANTY — Electrical Warranty
10 YEAR WARRANTY — Flush fittings & fold-up rails
LIFETIME WARRANTY — Sanitaryware (ceramic), toilet seats, brassware, grab rails & accessories
WRAS APPROVED PRODUCT — Cistern fittings & brassware

Product Codes

Close-Coupled Peninsular Doc M Pack	
Fluted Blue	**28317FBU**
Fluted White	**28317FWH**

SANITARYWARE

Pack 10: Ambulant Doc M Pack

Doc M

The Ambulant pack provides all the products needed to install a Doc M compliant toilet within a cubicle environment. This includes a close-coupled WC with lever flush and 650mm projection, grab rails able to support up to 23.5st (150kg), and contrasting clothes hooks.

Pack Contents

- Navlin Doc M raised-height, rimless toilet pan with 650mm projection
- Water-saving, close-coupled cistern with spatula lever flush and screw-down lid
- Ergonomic toilet seat with soft-close hinges and seat lugs, without lid (available in blue or white)
- 600mm straight grab rails with uPVC fluted finish (available in blue or white) x 4
- 450mm straight grab rail with uPVC fluted finish (available in blue or white)
- Blue clothes hook x 2

10 YEAR WARRANTY — Flush fittings & fold-up rails
LIFETIME WARRANTY — Sanitaryware (ceramic), toilet seats, brassware, grab rails & accessories
WRAS APPROVED PRODUCT — Cistern fittings & brassware

Product Codes

Close-Coupled Ambulant Doc M Pack	
Fluted Blue	**28318FBU**
Fluted White	**28318FWH**

SANITARYWARE

Doc M Packs 1 - 10

Doc M

Features & Benefits

- Rimless toilet pan with direct flushing technique offers improved hygiene levels by reducing the build-up of bacteria and making cleaning easier
- 480mm raised-height toilet pan (height with seat affixed) complies with Doc M guidelines, with extended 750mm projection to aid with side transfer
- Ergonomic toilet seat (with/without lid) is shaped for comfort and easy cleaning, comes with seat lugs for stability when side transferring, and soft-close hinges for safety
- Spatula lever flush cistern can be easily operated by hand, closed fist, or elbow, ideal for those with limited dexterity, with a screw-down lid for added security and safety in public facilities
- The low-level cistern with lever handle, flush pipe and padded back rest which offers user comfort. Easily operated by hand, closed fist, or elbow – ideal for those with limited dexterity – with a screw-down lid for added security and safety in public facilities
- Full (6 litre) and reduced flush options increase performance and water efficiency
- Two tap hole finger rinse wash basin for flexibility when installing – blanking plug supplied
- One tap hole wash basin with a flat tap deck for easy cleaning
- TMV3 approved thermostatic mixer tap with lever handle prevents scalding
- Monobloc spray mixer tap with stylish lever handle design
- Blue contrasting grab rails feature a fluted uPVC finish which offers superb grip even when wet and can support loads of up to 15.5st (100kg) when installed on walls suitable for weigh-loading
- Stainless-steel grab rails benefit from a durable coating and support loads of up to 23.5st (150kg)
- Fold-up rail is available in multiple colours to offer high colour contrast, supports loads of 30st (200kg), features an adjustable leg and optional toilet roll holder, is finished with an epoxy resin coating and treated with a rust inhibitor for longevity
- Shelves feature round corners to reduce injury in the event of a trip or fall
- Blue clothes hooks for high colour contrast
- Alarm pull cord with long pull cord and two bangles for grip
- Lever-operated soap dispenser is easy to use with an elbow or closed fist
- Paper towel and toilet tissue dispensers are both lockable
- Hand dryer with high output element for rapid drying
- Components individually packaged in recyclable materials to prevent damage during transit

Doc M Finger Rinse wash basin 400mm 2 tap hole

Doc M

Our Navlin Doc M finger rinse wash basin has been specially designed for use with our Doc M washroom packs, with two tap holes for flexibility when installing and a free-flowing waste.

To comply with Doc M regulations, offer increased hygiene, and provide users with greater ease of use, the tap should be installed on the side of the basin closest to the WC

- Two-tap hole basin complete with waste trap and fixings for easy installation
- Additional bracket provided under wash basin to provide extra support
- Non-handed (two tap-hole basin) with blanking plug supplied which provides flexibility in your installation
- Mixer tap (which is available separately) can be fitted either left or right-handed
- No plug supplied to ensure a free flow of water and prevent flooding, however optional plug and chain can be purchased separately if preferred
- Components individually packaged in recyclable materials to prevent damage during transit

Product Code

Doc M Finger Rinse wash basin 400mm 2 tap hole	**23117**

Close-Coupled Pan, Cistern & Ergonomic Seat

Doc M

Our Navlin Doc M close-coupled WC benefits from a raised-height, rimless toilet pan available with standard or extended projection which has been designed for use within our Doc M washroom packs.

Complete your WC with a fully compliant, water-saving cistern and a choice of flush and seat options.

LIFETIME WARRANTY — On pan, cistern & seat

10 YEAR WARRANTY — On flush fittings

WRAS APPROVED PRODUCT — On cistern fittings

UK CA | CE

For toilet seats see **page 467**

Features & Benefits

- Pan available with 650mm or 750mm projection to aid with side transfer from a wheelchair
- 480mm raised-height toilet pan (height with seat affixed) complies with Doc M guidelines and makes it easier for less mobile users to lower/rise from the toilet
- Rimless toilet pan with direct flushing technique offers improved hygiene levels by reducing the build-up of bacteria and making cleaning easier
- Pan can support up to 60st (400kg) to cater to a wide variety of users
- Wide pan footprint for increased stability when side transfers to/from a wheelchair
- BS EN 997 approved toilet pan for guaranteed flush performance
- Rounded edges and corners reduce the risk of injury in the event of a trip or fall
- Ergonomic toilet seats (available with or without lid) are shaped for comfort and easy cleaning, come with seat lugs for stability when side transferring, soft-close hinges for safety, can support up to 47st (300kg), and comes in a choice of colours to benefit the visually impaired or those with dementia
- Available with a raised push button or spatula lever flush, both of which can be easily operated by hand, closed fist or elbow
- Full (6 litre) and reduced flush options increase performance and water efficiency
- Bottom inlet water connection simplifies pipework
- Overflow pipe is 300mm above pan rim, fully complying with current UK Water Regulations

SANITARYWARE

Features & Benefits

- Cistern is fitted with a top-fill inlet valve that has an all-round air gap which is fully compliant with current UK Water Regulations
- Horizontal outlet waste connection for easy installation and maintenance
- Includes easy-to-secure, four-point, side-entry floor fixings which reduce the build-up of dust and bacteria and are easier to clean, as well as white cosmetic caps to prevent rusting
- Toilet pan, cistern (inc. flush mechanism) and seat supplied separately for additional flexibility when specifying
- Supplied with fixing kit as standard
- Components individually packaged in recyclable materials to prevent damage during transit

Product Codes

Navlin Doc M Raised-Height Close-Coupled Toilet Pan (650mm)	**23591**
Navlin Doc M Raised-Height Close-Coupled Toilet Pan (750mm)	**23590**
Navlin Doc M Cistern with Lever Flush & Screw-Down Lid	**23594**
Navlin Cistern with Raised Push Button Flush	**23574**

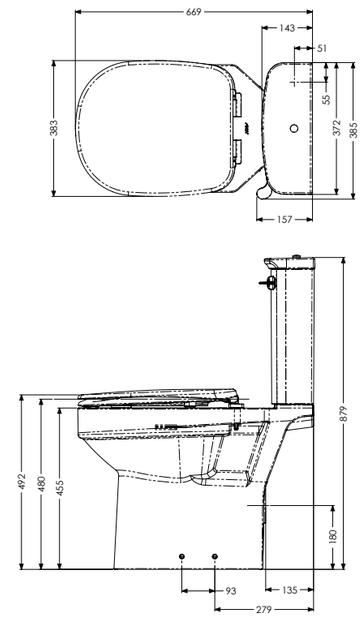

Navlin Doc M Raised-Height Close-Coupled Toilet Pan (650mm), Cistern with Lever Flush and Ergonomic Seat & Lid

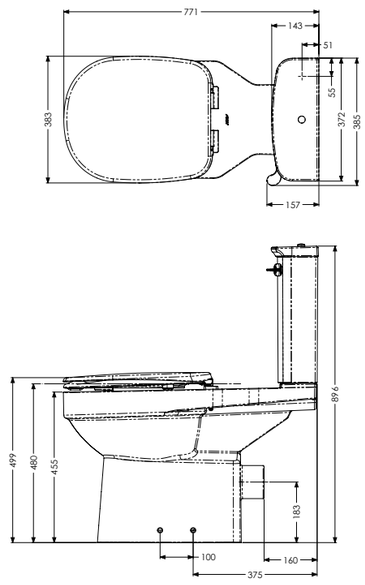

Navlin Doc M Raised-Height Close-Coupled Toilet Pan (750mm), Cistern with Lever Flush and Ergonomic Seat & Lid

SANITARYWARE

Back-to-Wall Toilet Pan

Doc M

Our Navlin Doc M back-to-wall toilet pan benefits from a raised-height, rimless design that can easily be installed as part of a Doc M bathroom solution. Complete your WC with a concealed cistern or fully compliant, water saving, low-level cistern, and a choice of flush, seat and accessory options.

LIFETIME WARRANTY — On pan, cistern & seat

10 YEAR WARRANTY — On flush fittings

WRAS APPROVED PRODUCT — On cistern fittings

UK CA | CE

For toilet seats see **page 467**

Features & Benefits

- 480mm raised-height toilet pan (height with seat affixed) complies with Doc M guidelines, makes it easier for less mobile users to lower/rise from the toilet, and aids with side transfer from a wheelchair
- Rimless toilet pan with direct flushing technique offers improved hygiene levels by reducing the build-up of bacteria and making cleaning easier
- Pan can support up to 60st (400kg) to cater to a wide variety of users
- Rounded edges and corners reduce the risk of injury in the event of a trip or fall
- BS EN 997 approved toilet pan for guaranteed flush performance
- Wide pan footprint for increased stability when side transferring to/from a wheelchair
- Ergonomic toilet seats (available with or without lid) are shaped for comfort and easy cleaning, come with seat lugs for stability when side transferring, soft-close hinges for safety, can support up to 47st (300kg), and comes in a choice of colours to benefit the visually impaired or those with dementia
- Compatible for use with a concealed cistern for a more streamlined aesthetic that hides any unsightly pipework
- Compatible with AKW fitted bathroom furniture, with all WC units including a cistern and recessed flush button
- Can be installed as a low-level WC, with the addition of a low-level cistern and flush pipe

SANITARYWARE

DOC M BACK-TO-WALL TOILET PAN

Features & Benefits

- Low-level cistern offers choice of raised push button or spatula lever flush, both of which can be easily operated by hand, closed fist or elbow
- Low-level cistern offers full (6 litre) and reduced flush options to increase performance and water efficiency
- Padded back rest is recommended when installing as part of a low-level WC for user comfort; pad is available in a choice of colours with a contrasting option ideal for the visually impaired
- Horizontal outlet waste connection for easy installation and maintenance
- Includes easy-to-secure, four-point, side-entry floor fixings which reduce the build-up of dust and bacteria and are easier to clean, as well as white cosmetic caps to prevent rusting
- Toilet pan, cistern (inc. flush mechanism) and seat supplied separately for additional flexibility when specifying
- Supplied with fixing kit as standard
- Components individually packaged in recyclable materials to prevent damage during transit

Product Codes

Navlin Doc M Raised-Height Back-to-Wall Toilet Pan	**23593**
Navlin Doc-M Low-Level Cistern with Lever Flush & Flush Pipe	**23559**
Navlin Low-Level Cistern with Push Button Flush & Flush Pipe	**23549**
Dudley Miniflo Cistern	**28179**

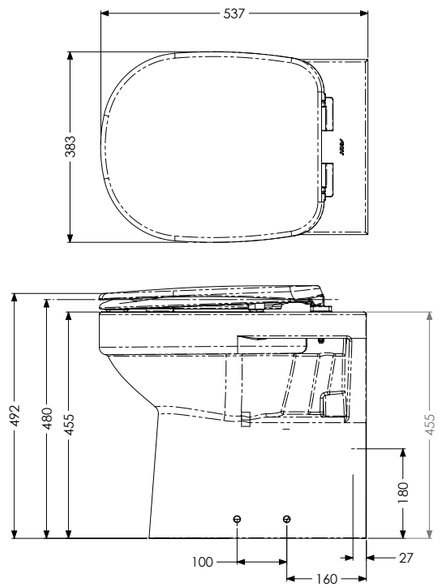

Navlin Doc M Back-to-wall Toilet Pan with Ergonomic Seat & Lid

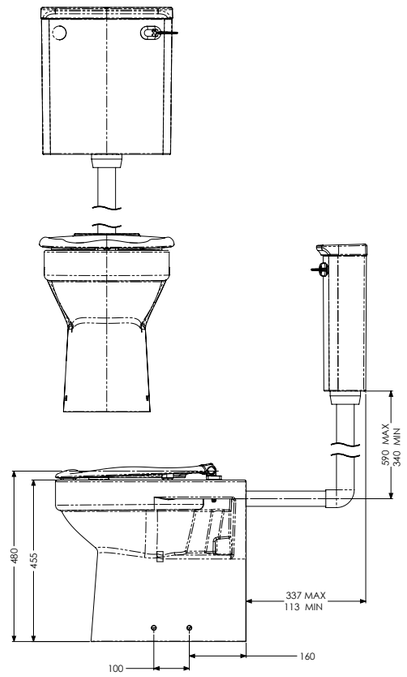

Navlin Doc M Low-Level WC with Lever Flush & Flush Pipe

SANITARYWARE

Doc M Hand Dryer

Doc M

Suitable for all applications, the hygienic 2.3kW automatic hand dryer comes complete with a heavy-duty white ABS cover.

5 YEAR WARRANTY
Electrical Warranty

Features & Benefits

+ Strong ABS case
+ High-output element for rapid drying
+ Installer adjustable hand proximity sensor
+ Timing protection with auto shut-off after 60 seconds
+ Temperature cut-out protection
+ Power supply 220-240V
+ 75dB
+ Weight: 3kg
+ IP rating: Drip Proof IP x 1
+ Dimensions: W: 235mm, H: 270mm, D: 142mm

Product Code	
Hand Dryer	**23624-UK**

Doc M Padded Back Rest

Features & Benefits

+ Aids side transfer
+ Available in grey, blue and white
+ Made from polyurethane foam for easy cleaning
+ Cushion thickness 60mm
+ Projection from wall: 270mm

Product Codes	
Padded Back Rest (Blue)	**01190BU**
Padded Back Rest (Grey)	**01190GR**
Padded Back Rest (White)	**01190WH**

Doc M Shelving

Doc M

AKW's range of white polypropylene shelving is designed for use next to the WC, wash basin or showering area.

Features & Benefits

+ Can be easily removed for cleaning
+ Two sizes available (Small: 215mm length, 185mm depth), (Large: 530mm length, 230mm depth)
+ Rounded edges for safety
+ Hole for water drainage
+ Small shelf next to the toilet is designed for placing a colostomy bag onto if required
+ Larger shelf next to wash basin is available to place any items on when entering the bathroom

Product Codes	
Small Shelf	**23145**
Large Shelf	**23146**

Doc M Lever-Operated Liquid Soap Dispenser

Doc M

The AKW lever-operated soap dispenser has been designed for easy operation, by hand, closed fist or elbow. It is refillable by simply topping up the soap bottle using liquid soap.

Features & Benefits

+ Lever operated
+ Extended blue lever provides better colour contrast/visibility for those with visual impairment
+ Easy to operate with either elbow or closed fist
+ Refillable
+ Manufactured from ABS plastic
+ Dimensions: W200mm, H260mm, D120mm

Product Code

Lever Operated Soap Dispenser	**23142**

Doc M Toilet Tissue Dispenser

Features & Benefits

+ Easy installation
+ Refillable using tissue up to 110 x 110mm in size
+ 240mm stack capacity
+ Lockable
+ Manufactured from ABS plastic
+ Dimensions: W135mm, H290mm, D130mm

Product Code

Toilet Tissue Dispenser	**23138**

SANITARYWARE

Doc M Paper Towel Dispenser

Doc M

Features & Benefits

+ Easy installation
+ Uses standard size towels
+ Large capacity – up to 350mm stack
+ Accepts interleaved or C-fold hand towels up to 255mm (W)
+ Lockable
+ Manufactured from ABS plastic
+ Dimensions: W285mm, H380mm, D110mm

Product Code

Paper Towel Dispenser	**23139**

Doc M Clothes Hook

These clothes hooks have been specially designed for use in AKW Doc M packs, although their practical design and easy installation makes them suitable for many other applications.

Features & Benefits

+ Finished in blue for high contrast
+ Easy to install with fixings supplied
+ Removable for cleaning

Product Code

Clothes Hook	**23144**

SANITARYWARE

Doc M Emergency Alarm and Pull Cord

Doc M

The AKW emergency audio alarm operates by a simple pull cord to allow users to raise an alarm from within a toilet or closed room. In standby mode the alarm shows a green 'power on' light. Once pulled, a flashing red 'alarm' light is triggered, along with an audio signal.

5 YEAR WARRANTY
Electrical Warranty

UK CA | CE

Features & Benefits

- Easy to operate control panel with 2 LEDs: green for 'on', red for 'activated'
- Reset switch
- Long pull cord with two red bangles for grip
- 12V DC power supply, 90dbA
- CE certified
- Can be connected to a 3A fused switched spur or plugged into a dedicated 3A fused, 13A plug and 230V AC supply socket
- Designed to BS8300:2009 guidelines

Product Code

Emergency Alarm and Pull Cord	**23143**

SANITARYWARE

For more information on these products please contact us on **01905 823298** or visit **orders.akw-ltd.co.uk**

Doc M Cistern, Flush Valve and Handle

Doc M

AKW Doc M cistern has been designed for use with the AKW toilet pan range.

UK CA | CE WRAS APPROVED PRODUCT BSI BS EN 997

* Flush pipe packaged separately

Features & Benefits

- Comes with a spatula dual-flush handle, with complete flush mechanism and fill valve
- Low-level cistern or close-coupled cistern available
- Screw-down lid for added safety and security
- 4/6 litre flush options for maximum water efficiency
- WRAS approval to EN997 standards
- Non-handed, it fits either left or right
- Low-level comes with flush pipe (760 x 305mm)
- Height: 385mm, Width: 450mm

Product Codes

Low-Level Cistern (Includes the flush pipe*)	**23559**
Close-Coupled Cistern	**23594**

Replacement Spatula Flush Handle and Mechanism Kit

Doc M

Features & Benefits

- Compact, spatula design handle with chrome finish
- Easy-to-operate lever, can be flushed with minimal force by closed fist or elbow
- Provides half-flush option which can be controlled by the user for maximum water efficiency
- Full/half-flush operation indicators
- Clear and raised markings make it suitable for partially sighted users
- Non-handed, it fits either left or right
- Handle is unique to AKW flush mechanism
- WRAS-approved flush mechanism and fill valve

WRAS Approval: 1105343

12 MONTH WARRANTY CE WRAS APPROVED PRODUCT

This is a spare part and is supplied with **23164** and **23163**

Product Code

Replacement Spatula Flush Handle and Mechanism kit	**23165**

SANITARYWARE

Walk-In & Assistive Baths

AKW's walk-in and assistive baths are designed to provide safe and comfortable bathing experiences for individuals with limited mobility or disabilities. These baths feature low-level entry, slip-resistant surfaces, and various additional features like grab rails and seating options. With AKW's walk-in and assistive baths, users can enjoy a relaxing and accessible bathing experience.

Blakemere, Deep Soaker, Corner Bath, 1210 x 650mm

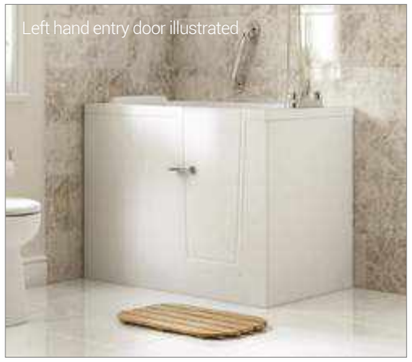

Features & Benefits

- Inward opening door with single lever door lock
- Seat height: 365mm
- Overall internal depth: 795mm
- Floor to top of bath: 865 - 965mm
- Incorporating moulded seat for seated bathing
- Dual clicker waste supplied
- Taps not supplied
- Guarantee: 1 year parts & labour, 5 year parts only
- Manufactured from GRP

Product Code

Blackmere Walk-In Corner Bath LH	**11-BLALH**
Blackmere Walk-In Corner Bath RH	**11-BLARH**
End Panel, Not Handed	**11-BLAEP**

150mm 250mm STEP-IN HEIGHT

LH RH

Dimensions (mm)

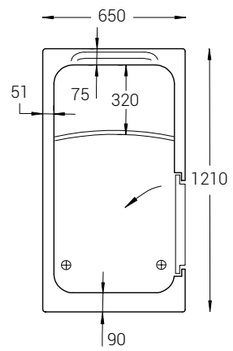

Shakerley, Assistive Bath 1700 x 700mm

Features & Benefits

+ Powered up / down seat lift to aid patient transfer or people who may require assistance when bathing
+ Inward opening door & button operated door mechanism
+ Contoured seat with fold down armrests
+ Powered lifting & lowering up to 150kg or 24 stone
+ Dual clicker waste supplied
+ Taps not supplied
+ Guarantee: 1 year parts & labour, 5 year parts only
+ Manufactured from GRP

Product Code

Shakerley Bath with Seat Lift LH	**11-SHALH**
Shakerley Bath with Seat Lift RH	**11-SHARH**
End Panel, not handed	**11-SHAEP**

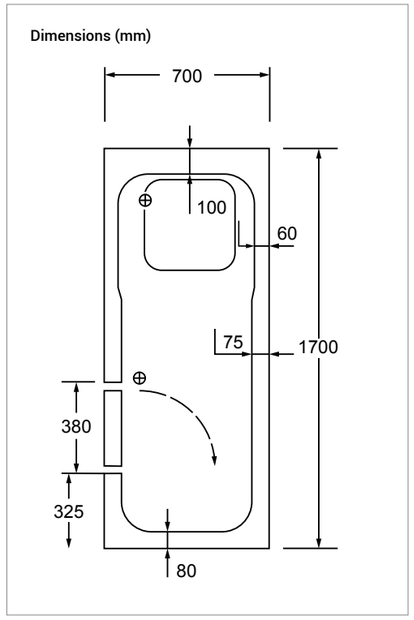

Oulton, Full length Walk-In Bath 1700x700mm

Features & Benefits

+ Inward opening door
+ Effortless, easy close latch mechanism
+ Optional end panel available
+ Dual clicker waste supplied
+ Taps not supplied
+ Guarantee: 1 year parts & labour, 5 year parts only
+ Manufactured from GRP

Product Code

Oulton Standard Walk-in Bath LH	**11-OULLH**
Oulton Standard Walk-in Bath RH	**11-OULRH**
End Panel, not handed	**11-OULEP**

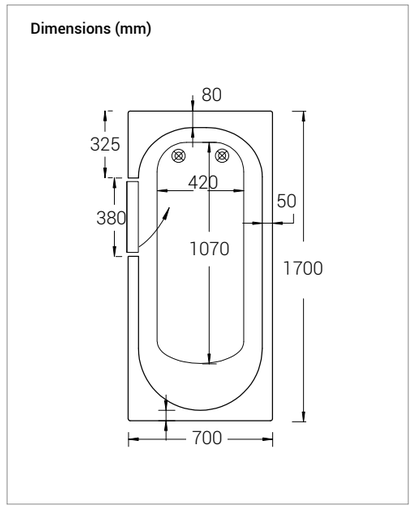

Bathroom Furniture & Accessories

Furniture 516

Basin Units 517
WC Units 518
Base Units 520
Countertops 502
Integrated Sanitaryware 522
Furniture Accessories 523

Bathroom Accessories 525

Onyx Toilet Roll Holder 526
Onyx Toilet Roll Brush 526
Onyx Towel Rail 527
Onyx Soap dish 528
Onyx Small Shelf 528
Onyx Large Shelf 529
Onyx Hook 529

You may also need:

Sanitaryware 407
Safety Flooring 321
Plumbing Fittings 545

Furniture

AKW's simple range of fitted bathroom furniture is both stylish and practical. Fitted furniture is great for providing plenty of storage and hiding unsightly pipework, whilst vanity furniture gives you the flexibility to add units together or position them separately depending on your style of bathroom.

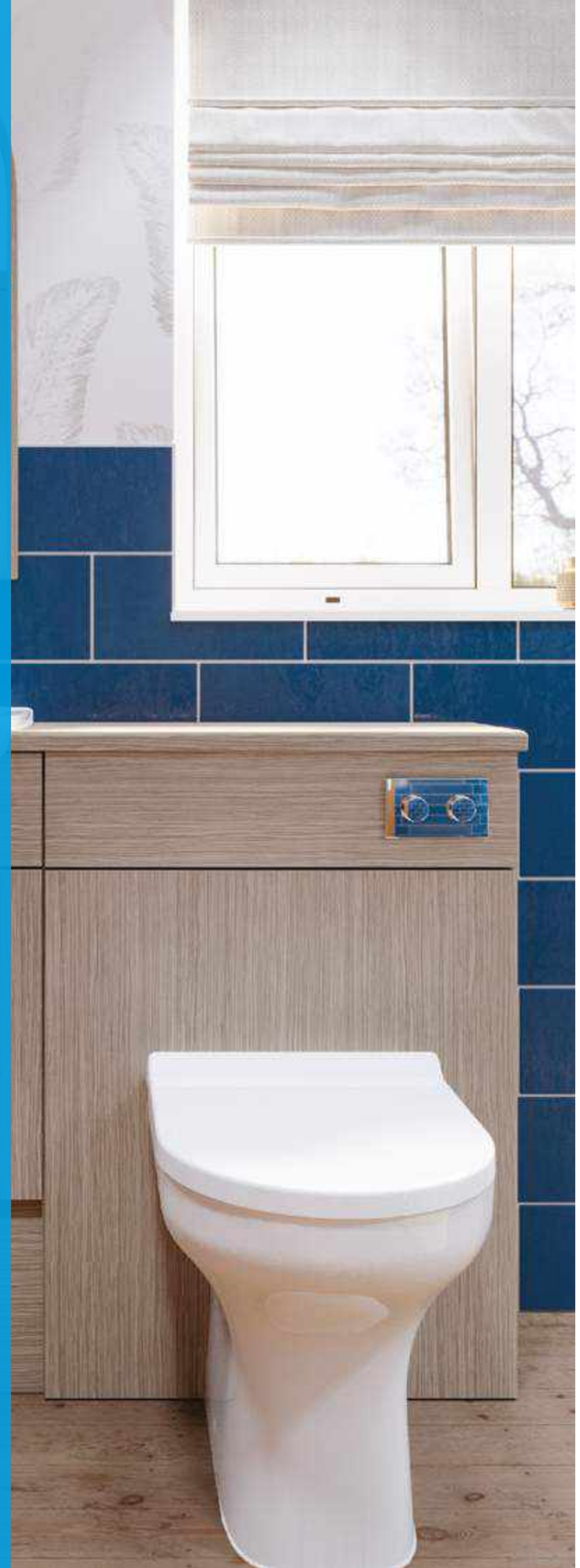

Colour Options:

White Gloss | Driftwood | Montana Oak

For matching **counter tops** see **page 502**

Basin Units

Features & Benefits

+ Two widths available: 500mm or 600mm
+ Height: 820mm, depth: 350mm
+ Includes cabinet legs

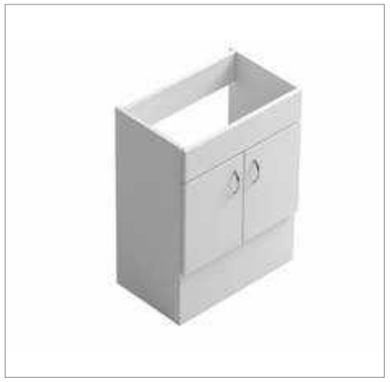

Product Codes

500mm White Gloss Basin Unit	**28150WHT**
600mm White Gloss Basin Unit	**28151WHT**
500mm Driftwood Basin Unit	**28150DFT**
600mm Driftwood Basin Unit	**28151DFT**
500mm Montana Oak Basin Unit	**28150MOK**
600mm Montana Oak Basin Unit	**28151MOK**

Handles, Plinths and Infill Panels are available for purchase seperately on **page 523**

Slimline Basin Units

Features & Benefits

+ Two widths available: 500mm or 600mm
+ Height: 820mm, depth: 270mm
+ Includes cabinet legs

Product Codes

500mm White Gloss Slimline Basin Unit	**28154WHT**
600mm White Gloss Slimline Basin Unit	**28155WHT**
500mm Driftwood Slimline Basin Unit	**28154DFT**
600mm Driftwood Slimline Basin Unit	**28155DFT**
500mm Montana Oak Slimline Basin Unit	**28154MOK**
600mm Montana Oak Slimline Basin Unit	**28155MOK**

Handles, Plinths and Infill Panels are available for purchase seperately on **page 523**

WC Units

Features & Benefits

+ Height: 820mm, depth: 350mm
+ Two widths available: 500mm or 600mm
+ Includes cistern and a recessed flush button
+ An optional dual-flush button is available separately (see **page** 523)

Product Codes

500mm White Gloss WC Unit	**28152WHT**
600mm White Gloss WC Unit	**28153WHT**
500mm Driftwood WC Unit	**28152DFT**
600mm Driftwood WC Unit	**28153DFT**
500mm Montana Oak WC Unit	**28152MOK**
600mm Montana Oak WC Unit	**28153MOK**

i Pan sold separately see **page** 407

Slimline WC Units

Features & Benefits

+ Height: 820mm, depth: 270mm
+ Two widths available: 500mm or 600mm
+ Includes cistern and a recessed flush button
+ An optional dual-flush button is available separately (see **page** 523)

Product Codes

500mm White Gloss SL WC Unit	**28156WHT**
600mm White Gloss SL WC Unit	**28157WHT**
500mm Driftwood SL WC Unit	**28156DFT**
600mm Driftwood SL WC Unit	**28157DFT**
500mm Montana Oak SL WC Unit	**28156MOK**
600mm Montana Oak SL WC Unit	**28157MOK**

i Pan sold separately see **page** 407

FURNITURE

WC Units for Raised-Height Pan

Features & Benefits

+ Height: 820mm, Depth: 350mm
+ Two widths available: 500mm or 600mm
+ Includes cistern and a recessed flush button
+ Suitable for raised-height toilet pans
+ An optional dual-flush button is available separately (see **page** 523)

Product Codes

500mm White Gloss WC Unit	**28193WHT**
600mm White Gloss WC Unit	**28194WHT**
500mm Driftwood WC Unit	**28193DFT**
600mm Driftwood WC Unit	**28194DFT**
500mm Montana Oak WC Unit	**28193MOK**
600mm Montana Oak WC Unit	**28194MOK**

i Pan sold separately see **page** 407

Slimline WC Units for Raised-Height Pan

Features & Benefits

+ Height: 820mm, Depth: 270mm
+ Two widths available: 500mm or 600mm
+ Includes cistern and a recessed flush button
+ Suitable for raised-height toilet pans
+ An optional dual-flush button is available separately – (see **page** 523)

Product Codes

500mm White Gloss SL WC Unit	**28195WHT**
600mm White Gloss SL WC Unit	**28196WHT**
500mm Driftwood SL WC Unit	**28195DFT**
600mm Driftwood SL WC Unit	**28196DFT**
500mm Montana Oak SL WC Unit	**28195MOK**
600mm Montana Oak SL WC Unit	**28196MOK**

i Pan sold separately see **page** 407

FURNITURE

Base Units

Colour Options:

White Gloss | Driftwood | Montana Oak

For matching **counter tops** see **page 502**

Full Door Base Units

Extra base units for storage and counter space, which can be floor mounted and made to order. Available in slimline and with full door or three-drawer options.

Features & Benefits

+ Width: 400mm, Height: 820mm, Depth: 350mm

Product Codes

White Gloss Full Door Unit	**28183WHT**
Driftwood Full Door Unit	**28183DFT**
Montana Oak Full Door Unit	**28183MOK**

Full Door Slimline Base Units

Features & Benefits

+ Width: 400mm, Height: 820mm, Depth: 270mm

Product Codes

Slimline White Gloss Full Door Unit	**28184WHT**
Slimline Driftwood Full Door Unit	**28184DFT**
Slimline Montana Oak Full Door Unit	**28184MOK**

Countertops

Colour Options:

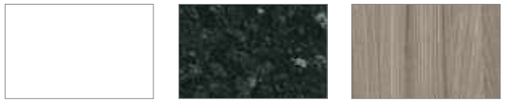

White Gloss | Everest | Driftwood

Countertops

Features & Benefits

+ Width: 1500mm, Height: 28mm, Depth: 365mm
+ Supplied with edging strip

Product Codes

White Gloss Countertop	**28131WHT**
Everest Countertop	**28131BLK**
Driftwood Countertop	**28131DFT**

Slimline Countertops

Features & Benefits

+ Width: 1500mm, Height: 28mm, Depth: 290mm

Product Codes

White Gloss Countertop	**28132WHT**
Everest Countertop	**28132BLK**
Driftwood Countertop	**28132DFT**

Semi-Recessed Basin

450mm basins are suitable for 500mm units and 550mm basins are suitable for 600mm units.

Features & Benefits

+ Suitable for use with standard countertops
+ One tap hole or two tap holes
+ Taps are not included – for taps (see **page 473**)

Product Codes

450mm Basin RH (1 tap hole)	**28127RH**
450mm Basin LH (1 tap hole)	**28127LH**
450mm Basin (2 tap holes)	**28130**
550mm Basin (1 central tap hole)	**28145**
550mm Basin (2 tap holes)	**28146**

Navlin Back-to-Wall Toilet Pan

Features & Benefits

+ Standard Height

Product Codes

Navlin Standard-Height Back-to-Wall Toilet Pan	**23572**
Carbamide Soft-Close Toilet Seat with Lid	**23588**
PP Soft-Close Toilet Seat with Lid	**23589**

Navlin Doc M Back-to-Wall Toilet Pan

Features & Benefits

+ 480mm raised height toilet pan
+ Compatible with Ergonomic seats see page **467**

Product Codes

Navlin Doc M Raised-Height Back-to-Wall Toilet Pan	**23593**

Traditional Knob Handle

Product Code

Single Traditional Knob Handle	**28136**

i Two handles are required for basin unit

D Handles

Product Code

Single D Handle (sold as singles)	**28139**

i Two handles are required for basin unit

Optional Dual Flush Plate

Features & Benefits

+ Optional replacement for Recessed Flush Button

Product Code

Palm-Push Dual Flush Plate	**28180**

Plinths/Infill Panels

Features & Benefits

+ Width: 1500mm, Height: 300mm, Depth: 18mm

Product Codes

White Gloss Plinth/Infill Panel	**28118WHT**
Driftwood Plinth/Infill Panel	**28118DFT**
Montana Oak Plinth/Infill Panel	**28118MOK**

i One infill/plinth is required for basin unit

Bathroom Accessories

AKW's range of bathroom accessories allow you to add stylish finishing touches to your bathroom.

Onyx Toilet Roll Holder

Features & Benefits

+ Can be used left or right-handed
+ Easy installation to bracket – only one screw needed
+ Removable end cap
+ Keeping in the same style as Onyx Grab Rails
+ Size : 77mm x 36mm x 201mm
+ ABS chrome and coloured holder and cap
+ Die-cast zinc alloy bracket
+ Black and white options available

Product Codes

Onyx Toilet Roll Holder Black and Chrome	**23688**
Onyx Toilet Roll Holder White and Chrome	**23685**

Onyx Toilet Brush

Features & Benefits

+ Floor or wall mounted
+ Requires two screws to attach to wall
+ Simple snap-fit to remove holder from wall plate
+ Removable toilet brush lid to reduce size and allow longer reach
+ Removable cup for cleaning
+ Size: 114mm x 427mm x 97mm
+ ABS chrome and colour plated
+ Black and white options available

Product Codes

Onyx Toilet Brush Black and Chrome	**23687**
Onyx Toilet Brush White and Chrome	**23684**

Onyx Towel Rail

Features & Benefits

+ Double-sided chrome tubes for multiple towels
+ Crush-fit logo end caps
+ Keeping in the same style as Onyx Grab Rails
+ Size: 77mm x 36mm x 481mm
+ Die-cast zinc alloy brackets and covers
+ Stainless steel tubes
+ Glass-filled nylon and ABS components
+ Black and white options available

Product Codes

Onyx Towel Rail Black and Chrome	**23689**
Onyx Towel Rail White and Chrome	**23686**

Onyx Tumbler Chrome

Features & Benefits

+ Interchangeable through range (the wall plate is the same as small shelf and soap dish)
+ Screws completely hidden
+ Easy to install
+ Size: 133mm x 42mm x 100mm
+ Glass-filled nylon wall plate
+ Chrome-plated ABS front cover
+ Clear acrylic shelf

Product Code

Onyx Tumbler Chrome	**23682**

Onyx Soap Dish Chrome

Features & Benefits

+ Interchangeable through range (the wall plate is the same as small shelf and tumbler)
+ Screws completely hidden
+ Easy to install
+ Size: 133mm x 42mm x 100mm
+ Glass-filled nylon wall plate, chrome-plated ABS front cover, clear acrylic shelf

Product Code

Onyx Soap Dish Chrome	**23683**

Onyx Small Shelf Chrome

Features & Benefits

+ Interchangeable though range (the wall plate is the same as tumbler and soap dish)
+ Screws completely hidden
+ Easy to install
+ Size: 113mm x 42mm x 100mm
+ Glass-filled nylon wall plate, chrome-plated ABS front cover, clear acrylic shelf

Product Code

Onyx Small Shelf Chrome	**23681**

Onyx Large Shelf Chrome

Features & Benefits

+ Snap-fit design to rails
+ No screws needed for installation
+ Fits with all Onyx rail sizes
+ Folds up for storage
+ Size: 151mm x 68mm x 300mm
+ Clear acrylic shelf

Product Code

Onyx Large Shelf Chrome	**23680**

Onyx Hook Chrome

Features & Benefits

+ Two-part hook – die-cast zinc alloy chrome-plated
+ Screw completely hidden
+ Easy to install
+ Size: 42mm x 45mm x 45mm

Product Code

Onyx Hook Chrome	**23690**

Heating & Electrical

Safety Heating 532

Towel Warmers 533

Underfloor Heating 534

Bathroom Lights 536

LED Bathroom Light 537

Task Focused Lighting 539

Task Focused Surface Mounted LED light 541

Extractor Fans 542

Venta Axia Lo Carbon Extractor Fan 543

Safety Heating

With external temperatures not exceeding 43°C, our towel warmers satisfy NHS Safe Surface Temperature Guidelines. Suitable for domestic use as well as in care or nursing homes and commercial buildings, they are easy to install, clean and use.

Low Surface Temperature Towel Warmer

Keep towels warm and skin safe with an addition to the room that's a pleasure to look at and safe to touch.

Features & Benefits

+ Luxury chrome or white finish
+ Electric LST fixed heat element
+ Modern design
+ Straight or curved models available
+ Various sizes available
+ Can be used with a timer
+ Easy and quick to install
+ Low maintenance costs
+ IP66 rated — can be installed in zones 1 and 2*

10 YEAR WARRANTY

2 year warranty on element

UK CA | CE

Product Codes

Radiator Product:	Width:	Height:	BTU/hr:	Wattage (W):	Code:
LST Straight Chrome Multirail Towel Warmer	300mm	800mm	1109	325	**23426**
LST Straight White Multirail Towel Warmer	300mm	800mm	1109	325	**23427**
LST Straight Chrome Multirail Towel Warmer	500mm	800mm	1434	420	**23428**
LST Straight White Multirail Towel Warmer	500mm	800mm	1434	420	**23429**
LST Straight Chrome Multirail Towel Warmer	300mm	1200mm	1672	490	**23430**
LST Straight White Multirail Towel Warmer	300mm	1200mm	1672	490	**23431**
LST Straight Chrome Multirail Towel Warmer	500mm	1200mm	2048	600	**23432**
LST Straight White Multirail Towel Warmer	500mm	1200mm	2048	600	**23433**
LST Curved Chrome Multirail Towel Warmer	500mm	800mm	1434	420	**23434**
LST Curved White Multirail Towel Warmer	500mm	800mm	1434	420	**23435**
LST Curved Chrome Multirail Towel Warmer	500mm	1200mm	2048	600	**23436**
LST Curved White Multirail Towel Warmer	500mm	1200mm	2048	600	**23437**

*Must be fitted in accordance with IEE Wiring Regulations.

Electric Underfloor Heating

With its programmable thermostatic controller, it warms up floors quickly, helping keep them drier, safer and more comfortable to walk on.

Features & Benefits

+ Keeps floors dry and warm for comfort and safety
+ Programmable thermostatic controller
+ Free multi-meter to check installation at every stage
+ Economic to use
+ Quick to warm up
+ Manual override
+ 15 trimmable sizes
+ 4 metre power cable

Product Codes

1m² Underfloor Heating Kit (150W)	**23438**
1.5m² Underfloor Heating Kit (225W)	**23439**
2m² Underfloor Heating Kit (300W)	**23440**
2.5m² Underfloor Heating Kit (375W)	**23441**
3m² Underfloor Heating Kit (450W)	**23442**
3.5m² Underfloor Heating Kit (525W)	**23443**
4m² Underfloor Heating Kit (600W)	**23444**
4.5m² Underfloor Heating Kit (675W)	**23445**
5m² Underfloor Heating Kit (750W)	**23446**
6m² Underfloor Heating Kit (900W)	**23447**
7m² Underfloor Heating Kit (1050W)	**23448**
8m² Underfloor Heating Kit (1200W)	**23449**
9m² Underfloor Heating Kit (1350W)	**23450**
10m² Underfloor Heating Kit (1500W)	**23451**
12m² Underfloor Heating Kit (1800W)	**23452**

10 YEAR WARRANTY

2 year warranty on thermostat sensor

UK CA | CE

ELECTRICAL

Bathroom Lights

Our bathroom lights have been designed specifically for extra safety, for use in bathrooms and exceeding Building Regulation Requirements.

LED Bathroom Light

Features & Benefits

- IP65 LED surface-mounted light fitting (18 Watt)
- Life length: 50,000 hours
- Diameter: 290mm, Depth: 95mm
- Class II – must be earthed
- Voltage supply: 230V

Product Code

LED Bathroom Light	**30080**

5 YEAR WARRANTY

On all AKW electrical items

UK CA | CE

Task Focused LED Light

LED spotlight with a narrow beam to focus lighting on tasks being operated.

Features & Benefits

+ 30-degree narrow beam
+ 3000k warm white light
+ LED long life
+ IP65 rating
+ Supplied with a driver to convert higher voltage AC current into low voltage DC current required for LED lighting

5 YEAR WARRANTY

Excludes Light Bulb

UK CA | CE

IP65

Product Code

Task Focused LED Lights	**30086**

Task Focused Lighting Kit

The importance of good lighting cannot be underestimated and good lighting can mean different things to different people, depending on a person's specific health condition.

Therefore, we have put together a Task Focused Lighting Kit to ensure sufficient light levels in the areas where specific tasks are undertaken promotes a person's long-term independence.

5 x Task Focused 8W LED Lights

2 x Standard 18W LED Lights

1 x Pull Cord Switch

Our recommended kit includes

+ 5 x Task Focused 8W LED Lights
+ 2 x Standard 18W LED Lights
+ 1 x Pull Cord Switch

Features & Benefits

+ 30-degree narrow beam
+ 3000k warm white light
+ LED long life
+ IP65 rating
+ Supplied with a driver to convert higher voltage AC current into low voltage DC current required for LED lighting

Product Codes

LED Basic Light – 18W	**30080**
Task Focused LED Lights	**30086**
Pull Cord Switch	**30087**
Task Focused Lighting Kit (2 x LED Basic Lights, 5 x Task Focused LEDs, 1 x Pull Cord)	**30088**

5 YEAR WARRANTY

Excludes Light Bulb

UK CA | CE

IP65

Task Focused Surface-Mounted LED Light

LED downlighter with a narrow beam to focus lighting on the area tasks take place to help users with sight loss achieve occupational performance.

5 YEAR WARRANTY
Excludes Light Bulb

UK CA | CE

IP65

Features & Benefits

+ 25° narrow beam
+ 3000k warm white light
+ IP54 Rating
+ LED long life
+ Built-in driver
+ Task lighting should be narrow and focused. The principle of task lighting is that the object within the environment is illuminated to support functional independence, when used in conjunction with a general LED bathroom light to illuminate the wider area
+ Warm white light allows colour contrast within the environment to take priority and reduce glare
+ Product is resistant to low-pressure water jets and vapour in the shower area
+ Provides up to 30,000 hours of light
+ Converts higher voltage AC current into low voltage DC required for LED lighting

Product Code

Task Focused Surface Mounted LED Light	**30140**

Extractor Fans

Our extractor fans have been designed specifically for extra safety, for use in bathrooms and exceeding Building Regulation Requirements.

Vent Axia Lo Carbon Extractor Fans

Features & Benefits

REVIVE SELV 7

+ Designed specifically for Social Housing
+ Continuous running
+ Extracts up to 60l/s
+ LED display for commissioning
+ High performance, low sound & energy levels
+ 7 year warranty

RESPONSE 7 / SELV

+ Designed specifically for Social Housing
+ Continuous running
+ High performance on trickle to avoid going to boost too often
+ Quick & easy to install, low maintenance & reliable
+ Timer adjustable between 1 & 30 minutes
+ 7 year warranty

Product Codes

Vent-Axia Centra Fan/Timer Humidistat 12v SELV HT	**15SF-VA02**
Vent-Axia Silhouette Fan/Timer/Humidistat 12v SELVT1000SVH	**15SF-VA04**
Vent-Axia Response SELV 13HTP Low Voltage	**15SF-VA06**
Vent Axia Revive 7 SELV Low Voltage	**15SF-VA07**
Shower LED Light with Fan, Silavent SPV802ETLED	**15SL01**

Vent Axia Revive

Vent Axia Response

Vent Axia Revive

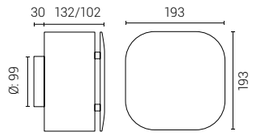

Vent Axia Response

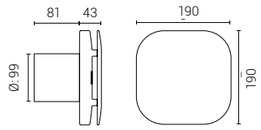

7 YEAR WARRANTY

Plumbing Fittings

Metal Fittings 546

Compression Fittings 547

Flexi Hoses 548

End Feed 548

Isolating Valves 549

Plastic Fittings 550

Push-Fit 551

Toilet Waste Connectors 552

Push-Fit Waste Pipes 553

Solvent Weld Fittings 554

Metal Fittings

AKW's range of metal fittings help to connect pipework together and change the direction of waterflow, and includes traditional compression and copper, flexi hoses for the connection of taps, and isolation valves for controlling the flow of water. Items are available in convenient pack sizes that allow you to just order the items you need.

Compression Fittings

Compression fittings are used to couple together pipes or to connect a pipe to a fixture or valve. There are three elements to a compression fitting: a nut, ring and seat. These work together to give a watertight connection. This simple mechanism makes it quick and easy for installers to connect or disconnect fittings.

Product Codes	
15mm Compression Straight Couplings x 5	**30016**
15mm Compression Elbows x 5	**30017**
15mm Compression Equal Tees x 5	**30018**
15mm Compression End Stops x 5	**30019**
22–15mm Compression Reducers x 5	**30020**
15mm Olives x 25	**30025**
22mm Compression End Stop x 5	**30024**
15mm Double Check Valve x 1	**30097**
15mm Straight Compression Coupling x 1 Chrome	**30129**
15mm Compression Elbow Chrome x 1	**30130**
15mm Compression End Stop Chrome x 1	**30132**
22mm Compression End Stop Chrome x 1	**30133**
22–15mm Compression End Stop Chrome x 1	**30135**
15mm x 2m Chrome Pipe	**30006**
Chrome Pipe Saddle x 10	**30126**

For more information on Plumbing Fitting please scan the QR code to the right

Flexi Hoses

Flexi hoses are used to allow you to connect taps to the water supply and are an excellent option when space is limited. They feature compression fittings on either end of the hose to make it quick and easy for installers to connect or disconnect the fitting.

Product Codes

FH 15mm Compression to 1/2" BSP 300mm LG x 2	**30048**
FH 15mm Compression to 1/2" BSP 300mm LG x 2	**30049**
FH with Valve 15mm Comp to 1/2" BSP 300mm LG x 2	**30090**
FH with Valve 15mm Comp to 1/2" BSP 300mm LG x 2	**30051**
1/2 inch BSP to 15mm push-fit Flexi Hose 300mm x 2	**30096**

End Feed

End feed fittings are used for connecting copper piping and provide a robust yet, economical option. Copper piping and joins are suitable in plumbing applications for both hot and cold water supplies. Connections are made by applying flux and a heat source to reach a suitable temperature, then adding solder around the joint to seal.

Product Codes

15mm End Feed Street Elbows x 5	**30003**
15mm End Feed Equal Tees x 5	**30004**
15mm x 3m Copper Pipes	**30005**
15mm x Copper Stop Ends x 5	**30101**
22–15mm End Feed Reducers x 5	**30007**
15mm Pipe Clips x 100	**30013**
15mm End Feed Straight Couplings x 5	**30001**
15mm End Feed Straight Couplings x 5	**30002**
Pipe Clip Spacers x 100	**30015**
Endfeed 15mm x 1/2 Straight Tap Connector x 1	**30142**
Endfeed 15mm x 3/4 Straight Tap Connector x 1	**30143**
Endfeed 22mm x 3/4 Straight Tap Connector x 1	**30144**
Universal top hat washer pack of 10	**30147**
1/2in Fibre tap washer pack of 10	**30145**
3/4in Fibre tap washer pack of 10	**30146**

Isolating Valves

Isolating Valves control the flow of water from the mains to a water service pipe. This is an ideal solution for fixing some problems, such as a dripping tap, without the need to shut the water off at the mains. The valve is easy for installers to operate, as it can be opened and closed using a flat-head screwdriver.

Product Codes

15mm Compression Full Bore Isolating Vavles x 5	**30054**
15mm Compression Isolating Vavlves x 5	**30053**
15mm Compression Isolating Elbow x 5	**30089**
Full Flow 22mm Isolating Valve x 1	**30051**

For more information on Plumbing Fitting please scan the QR code to the right

Plastic Fittings

AKW's range of essential plastic plumbing and pipe fittings includes modern push-fit pipes and components, as well as waste pipes and toilet waste connectors. Items are available in convenient pack sizes, allowing you to just order the items you need.

Push-Fit

Push-fit plumbing fittings are quick and easy for installers to connect without the need for any specialist tools or sealant. Push-fit works by inserting the pipe into the fitting and then sealing a watertight connection by twisting the rotating sealing cap.

Unlike with some other fittings, push-fit connections can be disassembled and reused by twisting the sealing cap on the fitting. Our push-fit range comes from industry leading brands to ensure quality and reliability.

Product Codes

15mm Push Fit Straight Couplings x 10	**30056**
15mm Push Fit Elbows x 5	**30057**
15mm Push Fit Equal Tees x 5	**30058**
22mm – 15mm Push Fit Reducers x 5	**30059**
22mm – 15mm Push Fit Reducing union Connectors x 5	**30136**
15mm Push Fit Pipe Inserts x 10	**30060**
15mm Push Fit End Stops x 10	**30061**
25m Roll of 15mm Push Fit Pipe	**30062**
22mm Push Fit Straight Couplings x 5	**30063**
22mm Push Fit Elbows x 5	**30064**
22mm Push Fit Equal Tees x 3	**30065**
22mm Push Fit Pipe Inserts x 10	**30066**
22mm Push Fit End Stops x 5	**30067**
25m Roll of 22mm Push Fit Pipe x 1	**30068**
15mm Collet Locking Clip x 5	**01-019-025X5**
22mm Collet Locking Clip x 5	**01-019-026X5**

For more information on Plumbing Fitting please scan the QR code to the right

Toilet Waste Connectors

Toilet waste connectors, also known as a toilet pan connectors, are fitted into the back of the toilet pan and connected to the waste pipe toilet and are a crucial part of any bathroom system.

Product Codes

Felcible Pan Connector	**30052**
McAlpine 90 Degree Bend Rigid Pan Connector x 1	**30099**
McAlpine Straight Rigid Pan Connector x 1	**30098**
McAlpine Space Saving Rigid Pan Connector x 1	**30100**

Seal Bath Traps

Product Codes

McAlpine Seal Bath Trap 38mm x 50mm SM10 x 1	**30851**
McAlpine Seal Bath Trap 19mm x 38mm Q10 x 1	**30852**

Basin Traps

Product Codes

Basin Trap - Chrome	**08-006-038**
Basin Trap - White	**08-006-040**

Push-Fit Waste Pipes

Push-fit waste fittings can be used to connect plastic waste pipes from 32–40mm diameter, and are probably one of the most commonly used waste fittings mainly due to their ease of use.

Product Codes

32mm Push Fit Wastepipe 3m	**30107**
40mm Push Fit Wastepipe 3m	**30108**
32mm Push Fit Waste Straight Coupling x 5	**30109**
40mm Push Fit Waste Straight Coupling x 5	**30110**
32mm Push Fit Waste Elbow x 5	**30111**
40mm Push Fit Waste Elbow x 5	**30112**
32mm Push Fit Waste Swept Elbow x 5	**30113**
40mm Push Fit Waste Swept Elbow x 5	**30114**
32mm Push Fit Waste Obtuse Elbow x 5	**30115**
40mm Push Fit Waste Obtuse Elbow x 5	**30116**
32mm Push Fit Waste Equal Tee x 5	**30117**
40mm Push Fit Waste Equal Tee x 5	**30118**
32mm Push Fit Waste Street Elbow x 5	**30119**
40mm Push Fit Waste Street Elbow x 5	**30120**
32mm Push Fit Waste End Stop x 5	**30121**
40mm Push Fit Waste End Stop x 5	**30122**
32mm Push Fit Waste Pipe Clip x 5	**30123**
40mm Push Fit Waste Pipe Clip x 5	**30124**
40mm x 32mm Push Fit Waste Pipe Reducer x 5	**30125**

For more information on Plumbing Fitting please scan the QR code to the right

Solvent Weld Fittings

Solvent weld pipes and fittings use solvent cement to create a permanent joint. Solvent cement is brushed to the inside of the fittings and the outside of the pipe, then the pipe is inserted into the fitting and twisted to ensure full coverage. Solvent weld waste pipe and fittings are used to connect appliances to the waste network in the building that carry it away. Our solvent weld range comes from Floplast, a brand with a strong reputation for quality and reliability.

Solvent Weld

Product Codes

250ml tin of Solvent Cement	**30037**
32mm Pipe Saddle x 5	**30036**
32mm Solvent Weld Elbows x 5	**30028**
32mm Solvent Weld Obtuse Elbows x 5	**30030**
32mm Solvent Weld Obtuse Street Elbows x 5	**30032**
32mm Solvent Weld Straight Couplings x 5	**30027**
32mm Solvent Weld Street Elbows x 5	30031
32mm Solvent Weld Swept Elbows x 5	**30029**
32mm Solvent Weld Swept Equal Tees x 5	**30033**
32mm x 3m Solvent Weld Pipes	**30035**
40mm – 32mm Solvent Weld Reducers x 5	**30034**
40mm Pipe Saddle x 5	**30046**
40mm Solvent Weld Elbows x 5	**30039**
40mm Solvent Weld Obtuse Elbows x 5	**30041**
40mm Solvent Weld Obtuse Street Elbows x 5	**30043**
40mm Solvent Weld Straight Couplings x 5	**30038**
40mm Solvent Weld Street Elbows x 5	**30042**
40mm Solvent Weld Swept Elbows x 5	**30040**
40mm Solvent Weld Swept Equal Tees x 5	**30044**
40mm x 3m Solvent Weld Pipe	**30045**
110mm Soil and Vent Pipe Strap with 40mm Boss x 1	**30047**

Contact & Information

AKW
Life Made Better

Orders, Quotes & Queries
01905 823 299
orders@akw-ltd.co.uk

Technical Enquiries
01905 560 219
tech@akw-ltd.co.uk

Kitchen Enquiries
01905 823 262
kitchens@akw-ltd.co.uk

Fax
01905 823 297

AKW
Pointon Way, Hampton Lovett
Droitwich Spa, WR9 0LR

www.akw-ltd.co.uk
orders.akw-ltd.co.uk

© AKW Medi-Care Limited 2023

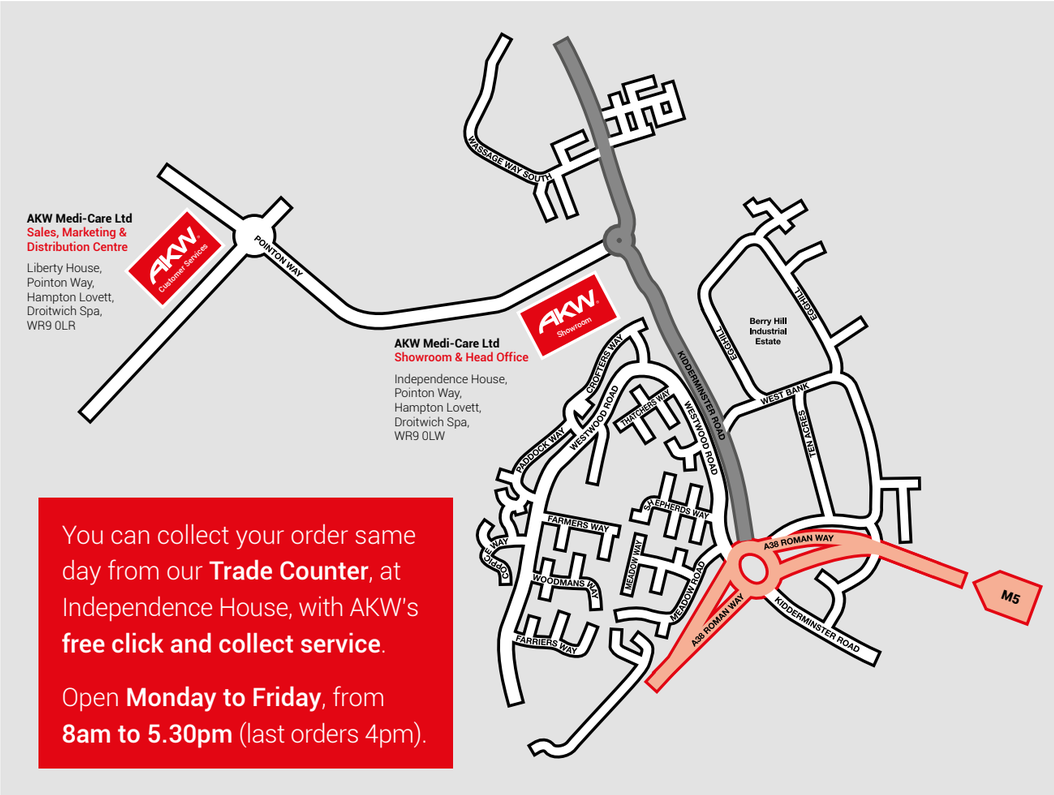

You can collect your order same day from our **Trade Counter**, at Independence House, with AKW's **free click and collect service**.

Open **Monday to Friday**, from **8am to 5.30pm** (last orders 4pm).

Visit AKW

From the North: Leave the M5 at Junction 5 (A38 Droitwich). At the roundabout, take the 4th exit onto the A38.

Continue on the A38, entering Droitwich. At the next roundabout, take the 4th exit onto Kidderminster Road (A442).

At the Stonebridge Cross roundabout, take the 1st exit onto Pointon Way (Stonebridge Cross Industrial Estate).

The first building on your left is the AKW Head Office and Showroom. For Sales, Marketing and Distribution continue on Pointon Way. At the roundabout, take the 1st left into AKW Liberty House.

From the South: Leave the M5 at Junction 6 (Worcester (N)). At the roundabout, take the 3rd exit onto the A4538. Continue on the A4538, entering Martin Hussingtree.
At the traffic signals, turn right onto the A38 (Droitwich).

Continue on the A38, entering Droitwich. At the next roundabout, take the 2nd exit onto Kidderminster Road (A442).

At the Stonebridge Cross roundabout, take the 1st exit onto Pointon Way (Stonebridge Cross Industrial Estate).

The first building on your left is the AKW Head Office and Showroom. For Sales, Marketing and Distribution continue on Pointon Way. At the roundabout, take the 1st left into AKW Liberty House.

Contents

INTRODUCTION

12 Reasons Why	4
Company History	10
Quick Page Finder	13
About AKW	16
How this book works	18
Icons	19
Choosing the right products	20
Placing an order	22
Customer Services	23
Surveying excellence	24
Delivery	25
Here to help	26
Regulation & compliance	27

WET ROOMS 29

Wet Room Formers	**31**
Showerdec	31
Tuff Form8® Former	39
Tuff Form® Former	47
TriForm® Former	57
Tanking Kits & Accessories	**62**
MAPEI Wet Room Tanking Kit	63
MAPEI AquaDefense Kit	64
Threshold Kits	64
FormSafe® Kit	65

SHOWER TRAYS 67

Braddan Trays	69
Sulby Trays	77
Sulby 2	80
Swift Trays	87
Eagle TWO Trays	91
Low Profile Trays	95
Onyx / Onyx Exclusif Trays	101
Onyx Linea Tray	108

WASTE SYSTEMS 111

Wastes & Pumps	**113**
Compatibility guide	114
Gravity Wastes	118
Waste Adaptors	127
Dry Wastes	129
Pumped Wastes	132
Digital Waste Pumps	140
AKW DigiPump SmartCare Wireless Waste Pump Kit	141
Wireless Interface	142
Auxiliary Pump Switch	143
DigiPump Flow Sensor Kit	143
P12 Waste Pump	144
Sanipro Macerator	148

SHOWER SCREENS & ENCLOSURES 151

Shower Screens	**151**
Larenco Screens	153
Opulance Screens	171
Level Best Glass Screens	179
Standard Screens	183
Screen Configurations	184
Made-to-Measure Screens	188
Sliding Screens	227
Portable Screens	236
Shower Curtain Rails	237
Drop Rods	239
Compensator	240
Shower Curtain Clip	241
Shower Curtains	242
Handles	243
Door Latches	243
Shower Cubicles	**245**
Onyx Care Pod	246
Onyx Shower Cubicles	256
Onyx Shower Cubicle Accessories	260
Standalone Cubicles	261
Showerloo	265

SHOWERS 267

Electric Showers	**269**
AKW SmartCare Plus	270
Wireless Remote	273
AKW SmartCare Lever	274
iTherm	277
Shower Isolator Switch	280
Additional Electric Showers	281

Mixer Showers **283**
Arka Care Cool Touch Mixer Valve 284
Arka Thermostatic Mixer Valve 284
Onyx Combo Mixer Shower 288
Vettora 290
Additional Mixer Showers 291
Rain Head Shower 292
On/Off Shower Head Handset 294
Eco-Save Mixer Shower 296
Easy Clean Shower Head 297

WALLS & SAFETY FLOORING 299

Tiles & Accessories **301**
Super White Bumpy Tiles 302
Coloured Tiles 303
Mosaic Tiles 304
Tile Edge Trim & Strips 304
Tile Backer Board 305
Tile Spacers 305
Tile Grout 306
Tile Adhesive 306
Wall Panels **309**
Marlbrook Wall Panels 310
Origins Wall Panels 313
Shower Niches 316
Access Panel 319
Safety Flooring **321**
Accessories 323
Timber 327

MOBILITY SUPPORT 329

Grab Rails **331**
Heavy Duty Grab Rails 332
Plastic Grab Rail 334
Stainless Steel Grab Rails 338
Onyx 2 Grab Rails 344
T-Shaped Grab Rails 349
Hand Rails 349
Floor-to-Ceiling Support Poles 350
Fold-Up Rails 351
Floor Mounted Pillar for Fold-Up Rail 353
Wave Grab Rail 354
Arch Grab Rail 355
Grab-a-Rail 356

Shower Seats **359**
Fold-Up Shower Seats 360
4000 Series Shower Seats 360
3000 Series Shower Seats 369
2000 Series Shower Seats 370
1000 Series Shower Seats 373
Onyx Shower Seats 374
Bama Shower Seats 377
Hanging Shower Seats 378
Freestanding Shower Seats 379
Wooden Shower Seats 380
Mobility Ramps **383**
Threshold Ramps 384
Standard Ramps 385

BEAUTIFUL BATHROOMS 387

Steel single ended bath 390
Bath panels 392
Bath shower screens 394
Bath shower kits 396
Bath taps 398
Tilted Mirror with Handle 404

SANITARYWARE & BRASSWARE 407

Wash & Dry Toilets & Bidets **409**
AKW Bidet 410
Close-Coupled Bidet (Pack 1) 416
Back-to-Wall Bidet (Pack 2) 418
Wall-Hung Bidet (pack 3) 420
AKW Rise & Fall Bidet (pack 4) 422
Geberit AquaClean Mera Care 430
Closomat Palma Vita & Palma Life 432
Sanitaryware **435**
Navlin Range 436
Livenza Plus Range 453
Livenza Range 456
Ergonomic Wash Basins 464
Salonex Hairdresser Basin 465
Wash Basin Fixing Brackets 466
Toilet Seats 467
Toilet Plinth 469

Brassware **473**
Wash Basin Taps 474
Brassware Accessories 481
Doc M **485**
Pack 1-10 490
Washroom Products 499
Walk-In & Assistive Baths **510**
Blakemere Deep Soaker Bath 511
Shakerley Assistive Bath 512
Oulton Walk-In Bath 513

BATHROOM FURNITURE & ACCESSORIES 515

Furniture **516**
Basin Units 517
WC Units 518
Base Units 520
Countertops 502
Integrated Sanitaryware 522
Furniture Accessories 523
Bathroom Accessories **525**
Onyx Toilet Roll Holder 526
Onyx Toilet Roll Brush 526
Onyx Towel Rail 527
Onyx Soap dish 528
Onyx Small Shelf 528
Onyx Large Shelf 529
Onyx Hook 529

HEATING & ELECTRICAL 531

Safety Heating **532**
Towel Warmers 533
Underfloor Heating 534
Bathroom Lights **536**
LED Bathroom Light 537
Task Focused Lighting 539
Task Focused Surface Mounted LED light 541
Extractor Fans **542**
Venta Axia lo Carbon Extractor Fan 543

PLUMBING FITTINGS 545

Metal Fittings **546**
Compression Fittings 547
Flexi Hoses 548
End Feed 548
Isolating Valves 549
Plastic Fittings **550**
Push-Fit 551
Toilet Waste Connectors 552
Push-Fit Waste Pipes 553
Solvent Weld Fittings **554**

CONTACT & INFORMATION 556

Contact us 556
Visit AKW 558
General Product Information 562
Legal Information 562
Terms & Conditions 563

General Product Information

Cleaning Instructions

To help maintain long-life, you should periodically clean all AKW and mobility support products.

Use normal domestic bathroom cleaning materials, and avoid any strong or concentrated acidic, alkaline or other cleaning materials. These may discolour or otherwise damage the products.

After cleaning, always rinse with water and wipe thoroughly with a damp cloth to remove any cleaning material residues.

Installation Instructions

AKW products should be installed by an experienced and competent person.

Fixings should be appropriate to the maximum rated user load, and selected to suit the condition of the surfaces to which it is being attached.

The selection of any specific fixings should be made by the installer based upon the requirements for each individual installation.

Power Showers/ High-Flow Systems

AKW trays and screens are not suitable for use with power showers or high-flow systems.

We recommend that you should use only AKW screens with AKW trays. These products have been designed and manufactured to be used together. Their use with non AKW products may adversely affect the integrity of the water seal between the tray and screen.

Legal Information

Most of our products are kept in stock, a few items are not immediately available and will need to be ordered. Please contact our Customer Services team on 01905 823 299 for more information.

For all technical information please refer to the installation instructions, available as a hard copy on request or online at akw-ltd.co.uk

The format, layout and organisation of this catalogue and all images herein are the property and copyright of AKW Ltd and may not be reproduced. AKW has a policy of continuous product improvement and reserves the right to change products, specifications and dimensions without prior notice. Copyright ©2018 AKW Medi-Care Ltd. All rights reserved. This publication and any part there of may not be reproduced, stored in a retrieval system or transmitted in any form or by any means, electronic, mechanical, photocopying, scanning or otherwise, without prior written permission. Speedfit® is the registered trademark of John Guest International Limited.

Some AKW products featured in the product literature are protected by one or more of the following U.K., U.S. or foreign patents and other pending patent applications and/or registered design or other pending design applications: GB2426194, GB2374876, GB2375479, GB2401341, GB2406270, GB2394175, GB2402946, GB2410426, EP1523914, GB205802, GB3021810, GB3020282, GB3021505, GB3016631, GB3020208, GB3023907, EU000627146-0001, EU000566849-0001, EU000343561-0001, EU000379524-0001, EU000415765-0001, EU000717541-0001/2/3/4/5, EU000694781-0001, EU000189105-0001, EU000448535-0001, EU000692249-0001, USD539394, USD36889, USD510487, USD501611, USD494767, US 6725470, US 6890427, GB3008313, GB3008314, GB3011017, GB3011018, GB3011016, GB2058001, GB2058002, EU000024591-0001/2, EU000062047-0001/2, EU000135702-0001/2/3/4/5/6/7/8/9, GB2394175, GB2306316, GB2313306, GB2315211, GB2322546, GB2373515, GB2375479, GB2359484, GB2369568, GB2372267, GB3020282, GB2490442, EU2087823, US8370982, US8286279, GB2481813, GB2560278.

AKW does not hesitate to undertake rigorous protection, defence and maintenance of its intellectual property assets world-wide. Unregistered design rights exist wherever permissible. All dimensions given in this brochure are approximate and subject to manufacturing tolerances. AKW Medi-Care Ltd makes no warranty, expressed or implied, or accepts any liability in connection with this information or its use. This information is furnished upon the condition that the person receiving it shall make their own tests to determine the suitability thereof for their particular purpose. The AKW device is a registered trademark of AKW Medi-Care Ltd.

"ActivMotion®", "AKW®", "AKW Delivering Independence®", "AKW Denova®" "AKW Liberty®", "AKW Medicare®", "AKW SmartCare Plus®", "Archimedes®", "Arka®", "AKW SmartCare®", "DigiPump®", "FormSafe®" "Intergrip®", "iSure®", "Larenco®", "Level Best®", "Livenza®", "Marlbrook®" "Mullen®", "Screedmaster®", "Silentflow+®", "Silverdale®", "Trays Direct®", "Tuff Form®", "Tuff Form8®", "TriForm®", "Triforce®" and "Universal®" are all registered trademarks.

We operate a constant improvement policy and our products are subject to change without notice.

AKW endeavour to provide literature that is correct at the time of printing. However we reserve the right to change product specifications, pricing and other information without notice. AKW take no responsibility for printing errors.

Copyright ©2020 AKW Medi-Care Ltd.
All rights expressly reserved.

Terms & Conditions

1. DEFINITIONS

1.1 The "Company" means AKW Medi-Care Limited.

1.2 The "Customer" means any person, firm or company purchasing the Goods.

1.3 The "Conditions" means the terms and conditions set out in this document as amended from time to time in accordance with clause 2.1.

1.4 The "Contract" means the contract between the Company and the Customer for the sale and purchase of the Goods in accordance with these Conditions.

1.5 "Credit Reference Agencies" means Experian Limited and/or any other organisation that maintains and provides information concerning the credit history of any person.

1.6 "Data Subjects" means (1) the Customer, (2) where the Customer is a company, the directors of that company, (3) where the Customer is a partnership, the partners of that partnership, (4) where the Customer is a limited liability partnership, the members of that limited liability partnership and (5) where the Customer is a business conducted by an individual, that individual.

1.7 The "Goods" means any goods or services set out in the Order.

1.8 "Group Company" means the Company and any holding company of the Company from time to time and any subsidiary from time to time of any such holding company, as such terms are defined in the Companies Act 2006.

1.9 The "Order" means the Customer's order for the Goods, via telephone, as set out in the Customer's purchase order form or in the Customer's acceptance of the Company's quotation in writing or via telephone, as the case may be.

1.10 The "Specification" means any specification for the Goods, including any related plans and drawings, that is agreed in writing by the Company and the Customer.

2. PREVAILING TERMS & CONDITIONS

2.1 The Company is only willing to contract on these Conditions, which apply to the Contract to the exclusion of any other terms that the Customer seeks to impose or incorporate, or which are implied by law, trade customer, practice or course of dealing. No variations from these Conditions are to have no legal effect unless agreed in writing by an authorised representative of the Company.

2.2 The Contract constitutes the entire agreement between the parties and the Customer acknowledges that in entering into the Contract it does not rely on any statement, promise, representation, assurance or warranty made or given by or on behalf of the Company (whether made innocently or negligently) which is not set out in the Contract. The Customer agrees that it shall have no claim for innocent or negligent representation.

2.3 The Customer waives any right it might otherwise have to rely on any term endorsed upon, delivered with or contained in any documents of the Customer that is inconsistent with these Conditions.

3. FORMATION OF CONTRACT

3.1 The Order constitutes an offer by the Customer to purchase the Goods in accordance with these Conditions. The Customer is responsible for ensuring that the terms of the Order and any applicable Specification are complete and accurate.

3.2 Any quotation from the Company shall not constitute an offer and is given to the Customer on the basis that no Contract will come into existence until the Customer's Order is accepted by the Company in writing or via the telephone. If the Customer's Order is not preceded by a quotation from the Company, the Customer's Order shall only be deemed accepted upon the Company confirming its acceptance of the Order to the Customer (either in writing or via telephone), at which point the Contract shall come into existence. For the avoidance of doubt, the Company's acceptance of an Order via the telephone is without prejudice to clause 2.1.

3.3 Upon the Company's acceptance of the Customer's Order, the Customer shall not be entitled to cancel the Order without the prior written consent of the Company.

3.4 Any samples, drawings or advertising produced by the Company and any descriptions or illustrations contained in the Company's catalogues or brochures are produced for the sole purpose of giving an approximate idea of the Goods referred to in them. They shall not form part of the Contract nor have any contractual force.

4. PRICING AND PAYMENT

4.1 The price of the Goods shall be the price set out in the Order, or, if no price is quoted, the price set out in the Company's published price list in force as at the date of delivery.

4.2 All prices are exclusive of:

a) value added tax (VAT), which will be added to the price at the prevailing rate and which is the Customer shall be liable to pay, subject to the receipt of a valid VAT invoice; and

b) the costs and charges of packaging, insurance and carriage which shall be invoiced to the Customer in accordance with the rates published in the Company's published price lists in force as at the date of delivery.

4.3 The Company reserves the right to, by giving notice to the Customer at any time before delivery:

a) increase the price of the Goods to reflect any increase in the cost of the Goods that is due to any:

(i) factor beyond the Company's control (including foreign exchange fluctuations, increases in taxes and duties, and increases in labour, materials and other manufacturing costs);

(ii) request by the Customer to change the delivery date(s), quantities or types of Goods ordered, or the Specification; or

(iii) delay caused by any instructions of the Customer or failure of the Customer to give the Company adequate or accurate information or instructions.

b) alter carriage charges without notice to the Customer in the event of fuel surcharges being imposed by the Company's carriers. Small consignments may include a small order charge as published in the Company's price lists in force as at the date of delivery.

4.4 The Customer shall pay each invoice submitted by the Company:

(a) within 30 days from the end of the month in which the invoice was sent by the Company; and

(b) in full and cleared funds to a bank account nominated in writing by the Company, and time for payment shall be of the essence of the Contract.

4.5 Without limiting the Company's remedies under clause 12 the Company reserves the right to charge interest at the rate of 4% a year over Lloyds Bank base rate from time to time (but at 4% a year for any period when the base rate is below 0%) on all overdue accounts, from the due date until payment of the overdue sum.

4.6 All amounts due under the Contract shall be paid in full without any set-off, counterclaim, deduction or withholding (other than any deduction or withholding of tax as required by law).

5. DELIVERY

5.1 Unless otherwise agreed in writing, the Company shall deliver the Goods to the location set out in the Order (the "Delivery Location)" and, delivery of the Goods shall take place at any time after the Company notifies the Customer that the Goods are ready.

5.2 The Delivery is completed on the completion of unloading the Goods at the Delivery Location.

5.3 Please do not schedule or start any installation work until after you have received the Goods and checked all Goods for any defects or missing parts. This will enable you to resolve any technical questions or to order specific additional fittings if needed.

5.4 Any quotation by the Company of a time for delivery is not guaranteed and time for delivery shall not be made of the essence by notice.

5.5 No liability is accepted for any delay in the delivery of the Goods (even if caused by the Company's negligence). Nor shall any delay entitle the Customer to terminate or rescind the Contract unless such delay exceeds 60 days.

Terms & Conditions

5.6 In the absence of fraud or manifest error, the quantity of any consignment of Goods as recorded by the Company on despatch from the Company's place of business shall be conclusive evidence of the quantity received by the Customer on delivery.

5.7 The Company shall not be liable for any non-delivery of Goods (even if caused by the Company's negligence) unless the Customer gives written notice to the Company of the non-delivery within 72 hours of the time when the Goods would in the ordinary course of events have been received.

5.8 Any liability of the Company for non-delivery of the Goods shall be limited to replacing the Goods within a reasonable time or issuing a credit note at the pro rata Contract rate against any invoice raised for such Goods.

5.9 No claim for damage to the Goods or shortages in the Goods will be considered unless the Company is advised within 72 hours of delivery.

5.10 If the Customer fails to accept delivery of any of the Goods when they are ready for delivery (except where such failure is caused by the Company's failure to comply with its obligations under the Contract), or the Company is unable to deliver the Goods on time because the Customer has not provided appropriate instructions or documents, or does not hold the necessary licences or authorisations: (a) the Goods shall be deemed to have been delivered; and (b) the Company may store the Goods until delivery, whereupon the Customer shall be liable for all related costs and expenses (including, without limitation, storage and insurance).

6. TITLE AND RISK

6.1 The title to the Goods shall not pass to the Customer until:

(a) the purchase price of the Goods has been paid in full; and

(b) the Company receives payment in full for any other goods that the Company has supplied to the Customer in respect of which payment has become due, in which case title to the Goods shall pass at the time of payment of all such sums.

6.2 Risk in the Goods shall pass to the Customer on completion of delivery, at which point the Customer shall be responsible for maintaining the Goods in satisfactory condition and appropriately insuring the Goods against all risks for their full price from the date of delivery.

6.3 Until title to the Goods has passed to the Customer, the Customer shall:

(a) keep the Goods separately from all other goods held by the Customer so that they remain identifiable as the Company's property;

(b) not destroy, deface or obscure any identifying mark or packaging on or relating to the Goods; and

(c) notify the Company immediately if it becomes subject to any of the events listed in clause 12.1(c).

6.4 At any time before title to the Goods passes to the Customer, the Company may require the Customer to deliver up all Goods in its possession that have not been resold or irrevocably incorporated into another product and if the Customer fails to do so promptly, enter any of the Customer's premises, or the premises of any third party where the Goods are stored, in order to recover the Goods.

6.5 The Company shall be entitled to recover payment for the Goods notwithstanding that ownership of any of the Goods has not passed from the Company.

7. GOODS

7.1 Due to a continual policy of product development the Company reserves the right to amend Specifications where required. The Company further reserves the right to amend the Specification if required by any applicable statutory or regulatory requirement, and the Company shall notify the Customer in any such event.

7.2 Irrespective of any suggestions and guidance given by the Company in its literature or otherwise it is the Customer's responsibility to ensure the installation of the Goods complies with all regulations and requirements that apply to the Customer's site.

7.3 To the extent that the Goods are to be manufactured in accordance with a Specification supplied by the Customer, the Customer shall indemnify the Company against all liabilities, costs, expenses, damages and losses (including any direct, indirect or consequential losses, loss of profit, loss of reputation and all interest, penalties and legal and other reasonable professional costs and expenses) suffered or incurred by the Company in connection with any claim made against the Company for actual or alleged infringement of a third party's intellectual property rights arising out of or in connection with the Company's use of the Specification. This Clause 7.3 shall survive termination of the Contract.

8. WARRANTY

8.1 All catalogue products are guaranteed for life apart from where it indicates otherwise, subject to this Clause 8.1. The Company will free of charge repair or at its option replace any Goods which are proved to its reasonable satisfaction to have failed to meet any Specification due to defective material or workmanship, provided that this obligation shall not apply where: (a) the Goods have been improperly installed, or installed with a defect without the written authority of the Company, or altered in any way, or are subject to any unauthorised repair or misuse, or (b) the Customer has failed to provide documentary notification and proof of a defect or suspected defect or returned the goods for inspection within 14 days of the same coming to the knowledge of the Customer, or (c) the Customer is in breach of this or any other contract with the Company. Except as provided in this Clause 8.1 (and subject to Clause 13.2), the Company shall have no liability to the Customer in respect of the Goods' defects or failure including without limitation, any failure to meet any Specification due to defective material or workmanship. The Customer shall provide the Company with such access to the Goods that are the subject of any defect as the Company reasonably requires. The Company reserves the right to charge the Customer a reasonable fee in advance to cover the cost of any visits to inspect Goods where any defect claim is asserted by the Customer pursuant to this Clause 8.1. Any such fee paid shall be reimbursed to the Customer where the Company accepts the defect claim following the inspection of the Goods.

8.2 The Company warrants to the Customer that any services that are comprised within the Goods will be provided by the Company using reasonable care and skill.

8.3 To the greatest extent permitted by law, the Company hereby excludes all conditions, warranties and stipulations express or implied, statutory, customary or otherwise which but for such exclusion would or might subsist in favour of the Customer (including, without limitation, the terms implied by sections 13 to 15 of the Sale of Goods Act 1979 and sections 3,4 and 5 of the Supply of Goods and Services Act 1982).

9. RETURNS

9.1 The Customer shall notify the Company within 30 days of the date of delivery of the Goods, should it wish to return the Goods and any returns shall be subject to the prior approval of the Company. The Company disclaims liability for goods returned without the authority of the Company. Any Goods approved for return must be advised quoting the Company's invoice number and returns number.

9.2 The Company disclaims any risk or liability for any returns whilst in transit to the Company.

9.3 All returns must be in the original packaging. Only items printed on the returns form are authorised for return. The Company reserves the right to return any non-authorised items to the Customer. The Customer is required to check the Goods in order to ensure it is happy with the Goods before signing any Goods delivery.

9.4 The Company reserves the right to deduct repackaging or restocking fees (where applicable) from any credit/refund amount, or to apply charges direct to the Customer's account. If a return is made using a third-party carrier proof of postage must be retained.

9.5 The Company reserves the right to not credit an account if proof of postage cannot be provided and also the right to charge such collection charges as may apply from time to time.

9.6 The following items may not be returned by the Customer: - made-to-measure products, kitchen units and any Goods made in accordance with a bespoke specification of the Customer.

10. RIGHT TO SUB-CONTRACT OR ASSIGN

10.1 The Company shall be entitled to, at any time, mortgage, charge, sub-contract, delegate, declare a trust over, assign or deal in any other manner with any or all of its rights and obligations under the Contract.

Terms & Conditions

10.2 The Customer shall not be entitled to assign, transfer, mortgage, charge, subcontract, delegate, declare a trust over or deal in any other manner with any of its rights and obligations under the Contract or any part of it without the prior written consent of the Company.

11. FORCE MAJEURE

11.1 If the Company is prevented or hindered from making delivery of any Goods or completion of any work by reason of acts of God, civil disturbance, industrial action (including labour disputes involving the work force or any part of the work force of the Company), government action or any other cause whatever beyond the Company's control, the Company may give notice to the Customer either: (a) cancelling the Company's outstanding obligations under the Contract, or (b) extending the time for delivery or completion by a period not exceeding four months.

12. TERMINATION

12.1 Without limiting its other rights or remedies, the Company may terminate the Contract with immediate effect upon service of written notice to the Customer on the happening of any one or more of the following:

(a) the Customer commits a material breach of any term of the Contract;

(b) the Customer fails to pay any amount due under the Contract on the due date for payment;

(c) the Customer takes any step or action in connection with its entering administration, provisional liquidation or any composition or arrangement with its creditors (other than in relation to a solvent restructuring), obtaining a moratorium, being wound up (whether voluntarily or by order of the court, unless for the purpose of a solvent restructuring), having a receiver appointed to any of its assets or ceasing to carry on business or, if the step or action is taken in another jurisdiction, in connection with any analogous procedure in the relevant jurisdiction;

(d) the Customer's financial position deteriorates so far as to reasonably justify the opinion that its ability to give effect to the terms of the Contract is in jeopardy.

12.2 On termination of the Contract for any reason the Customer shall immediately pay to the Company all of the Company's outstanding unpaid invoices and interest and, in respect of Goods supplied but for which no invoice has been submitted, the Company shall submit an invoice, which shall be payable by the Customer immediately on receipt.

12.3 Termination of the Contract, however arising, shall not affect any of the parties' rights and remedies that have accrued as at termination, including the right to claim damages in respect of any breach of the Contract which existed at or before the date of termination.

12.4 Any provision of the Contract that expressly or by implication is intended to come into or continue in force on or after termination of the Contract shall remain in full force and effect.

13. LIABILITY

13.1 References to liability in this Clause 13 include every kind of liability arising under or in connection with the Contract including liability in contract, tort (including negligence), misrepresentation, restitution or otherwise.

13.2 Nothing in the Contract limits any liability which cannot legally be limited, including liability for:

(a) death or personal injury caused by negligence;

(b) fraud or fraudulent misrepresentation;

(c) breach of the terms implied by section 12 of the Sale of Goods Act 1979; or

(d) defective products under the Consumer Protection Act 1987.

13.3 Subject to Clause 13.2, the Company's total liability to the Customer under each Contract shall not exceed 100% of the price paid or payable by the Customer for the Goods in respect of the Contract.

13.4 Subject to Clause 13.2, the following types of loss are wholly excluded:

(a) loss of profits;

(b) loss of sales or business;

(c) loss of agreements or contracts;

(d) loss of anticipated savings;

(e) loss of use or corruption of software, data or information;

(f) loss of or damage to goodwill; and

(g) indirect or consequential loss.

13.5 No term of the Contract shall apply so as to have the effect of unlawfully limiting or excluding the legal rights of a Customer who is acting in the capacity of a consumer (being an individual acting for purposes which are wholly or mainly outside that person's trade, business, craft or profession).

14. CONFIDENTIALITY

14.1 Each party undertakes that it shall not at any time disclose to any person, or use for any purpose other than performing its obligations or enforcing its rights hereunder, any confidential information concerning the business, assets, affairs, customers, clients or suppliers of the other party.

15. GENERAL

15.1 Notices.

(a) Any notice or other communication given to a party under or in connection with the Contract shall be in writing, addressed to that party at its registered office (if it is a company) or its principal place of business (in any other case) or such other address as that party may have specified to the other party in writing in accordance with this clause, and shall be delivered personally, or sent by pre-paid first class post or other next working day delivery service, commercial courier or email.

(b) A notice or other communication shall be deemed to have been received: if delivered personally, when left at the address referred to in clause 15.1(a); if sent by pre-paid first class post or other next working day delivery service, at 9.00 am on the second Business Day after posting; if delivered by commercial courier, on the date and at the time that the courier's delivery receipt is signed; or, if sent by email, one Business Day after transmission.

(c) The provisions of clause 15.1 shall not apply to the service of any proceedings or other documents in any legal action.

15.2 Severance. If any provision of the Contract is found by any court, tribunal or administrative body of competent jurisdiction to be wholly or partly illegal, invalid, void, voidable, unenforceable or unreasonable it shall to the extent of such illegality, invalidity, voidness, voidability, unenforceability or unreasonableness be deemed severable and the remaining provisions of the Contract and the remainder of such provision shall continue in full force and effect.

15.3 Waiver. Failure or delay by the Company in enforcing or partially enforcing any provision of the Contract shall not be construed as a waiver of any of its rights under the Contract. Any waiver by the Company of any breach of, or any default under, any provision of the Contract by the Customer shall not be deemed a waiver of any subsequent breach or default and shall in no way affect the other terms of the Contract.

15.4 Third party rights. The parties to the Contract do not intend that any term of the Contract shall be enforceable by virtue of the Contracts (Rights of Third Parties) Act 1999 by any person that is not a party to it.

16. GOVERNING LAW AND JURISDICTION

16.1 The Customer and the Company agree that the Contract and any dispute or claim (including non-contractual disputes or claims) arising out of or in connection with it or its subject matter or formation, shall be governed by and construed in accordance with English law and each party irrevocably agrees that the courts of England and Wales shall have exclusive jurisdiction to settle any dispute or claim (including non-contractual disputes or claims) arising out of or in connection with the Contract or its subject matter or formation.

17. CREDIT CHECKS

17.1 To help the Company decide whether to enter into a Contract and to help the Company manage the Customer's account, the Company may search any of the following records, namely the Data Subjects' personal and business records at Credit Reference Agencies, the Company's **own**

Terms & Conditions

records and those of any Group Company concerning Data Subjects and Data Subjects' records at UK or overseas fraud prevention agencies. A record of the Company's searches will be made and this will be available to other organisations who make similar searches. Credit Reference Agencies may supply to the Company both public (including electoral register) and shared credit and fraud prevention information. The Company may also use information it obtains from the Customer's performance of any other agreement or contract it has or has had with any Group Company. The Company may also use identity verification, credit scoring or other automated decision-making systems.

17.2 The Company will add to the Data Subjects' records with the Credit Reference Agencies by giving information relating to the Data Subjects, the Contract and information about the Customer's payment record. The Company will also tell them of any delay or default in payment or otherwise and any change of address the Customer fails to notify to the Company when any payment is overdue. It is important that Data Subjects supply accurate information to the Company. The Company may check Data Subjects' details with fraud prevention agencies and if the Company is given false or inaccurate information or the Company suspects fraud, it will record this and may pass on this information to fraud prevention agencies and other organisations involved in crime and fraud prevention. Credit Reference Agencies and fraud prevention agencies may record any information supplied to them by the Company. Records remain on file for six years or other period permitted by applicable law.

17.3 This information may be supplied to, shared with and cross checked by other UK or overseas businesses and organisations (including any Group Company, lenders, Credit Reference Agencies, fraud prevention agencies, credit industry fraud avoidance networks and any other company that the Company may select from time to time):

(a) to assess applications for credit and relate services made by Data Subjects;

(b) to trace debtors, recover debt, to prevent fraud and money laundering;

(c) to make decisions about a Data Subject's account;

(d) to carry out statistical analysis and market research;

(e) for such other purposes required or permitted by law, including the General Data Protection Regulation (GDPR).

17.4 The Company may also give information about Data Subjects to:

(a) the Company's insurer;

(b) anyone acting on the Company's behalf, including a Group Company;

(c) any finance house;

(d) companies or other bodies which maintain registers of assets and interests in them; and

(e) credit industry fraud avoidance networks for the purpose of administration, underwriting and processing.

17.5 The identities of the Credit Reference Agencies and the ways in which they use and share personal information are explained in more detail at https://www.experian.co.uk/legal/crain/.

17.6 Fraud prevention agency records will also be shared with other organisations to help make decisions on credit proposals for Data Subjects. For these purposes the Company or they may make further searches.

17.7 Information held about Data Subjects by the Credit Reference Agencies may already be linked to records relating to one or more of their partners. For the purposes of the Contract, Data Subjects may be treated as financially linked and the Customer's application will be assessed with reference to any associated records. If the Customer is a joint applicant or a Data Subject has told the Company of some other financial association with another person, the Customer and applicable Data Subjects must be sure that they are entitled to disclose information about the applicable joint applicant and anyone referred to by them and authorise the Company to search, link or record information at Credit Reference Agencies about them and anyone referred to by them. An "association" between joint applicants and between applicants and anyone referred to by them a financial partner will be created at Credit Reference Agencies. This will link the financial records of applicants and all such persons, each of which will be taken into account in all future applications by any of the applicants and all such persons. This will continue until one of them successfully files a disassociation at the Credit Reference Agencies.

17.8 If a Customer has obtained credit from the Company and does not make payment when due, the Company will trace the Customer's whereabouts and recover debts.

17.9 The Company may contact Data Subjects from time to time with details of other products and services which it or third parties offer. Any such contact will be aligned with the requirements of the General Data Protection Regulation (GDPR), and Data Subjects will have the option to opt-out of this type of contact. For this purpose, the Company may make use of an automated decision-making programme now and in the future. It may also share information about Data Subjects to any Group Company. The Company will never sell your Personal Data to any third parties. Data Subjects may be contacted by post, telephone, or other means. Data Subjects have a legal right to stop the Company from contacting them or giving their details to others for direct marketing purposes. Please write to the Company at our address at AKW Medi-Care Limited, Unit 404 Pointon Way, Hampton Lovett, Droitwich Spa, Worcestershire WR9 0LR if you wish to exercise this right.

17.10 Data Subjects have several legal rights with regard to the Personal Data the Company holds about them. These rights granted under the General Data Protection Regulation (GDPR) include the right to be informed, the right of access, the right to rectification, the right to erasure, the right to restrict processing, the right to data portability, the right to object and rights in relation to the use of automated data profiling or decision-making systems. The Company has procedures in place to uphold these rights and fulfil and related requests within thirty days from acknowledgement. Further details can be found in our Privacy Notice or you may contact GDPR.enquiries@akw-ltd.co.uk.

17.11 By agreeing to these terms and conditions, Data Subjects accept that the Company may use information concerning them in the way described above. The Company will take steps to ensure Personal Data is collected fairly, used for the purposes stated, stored securely and only retained.

18. DEMENTIA SERVICES DEVELOPMENT CENTRE

The Dementia Services Development Centre at the University of Stirling have undertaken a review of this product and have rated its design in relation to dementia design principles and it's usability within a dementia-inclusive environment. For ease of identification, the suitability of the product is classified by number with corresponding explanation of use, within the ratings key provided. The DSDC Accredited Product logo is awarded on the merit of the individual product and colour-way. This accreditation does not merit the manufacture or final application of the product. Whilst every endeavour has made to ensure the ratings are reflective of the products suitability and applied use at the time of print, DSDC cannot be held responsible for the application of the final product, it's performance or its interface with other products or finishes. For an environment to be considered 'dementia-inclusive' or 'dementia-friendly' careful consideration must be given to the specification of adjoining finishes, their performance specification (for example light reflectance value (LRV), slip resistance and use of pattern) and their suitability for their intended use.design in relation to dementia design principles and it's usability within a dementia-inclusive environment. For ease of identification, the suitability of the product is classified by number with corresponding explanation of use, within the ratings key provided. The DSDC Accredited Product logo is awarded on the merit of the individual product and colour-way. This accreditation does not merit the manufacture or final application of the product. Whilst every endeavour has made to ensure the ratings are reflective of the products suitability and applied use at the time of print, DSDC cannot be held responsible for the application of the final product, it's performance or its interface with other products or finishes. For an environment to be considered 'dementia-inclusive' or 'dementia-friendly' careful consideration must be given to the specification of adjoining finishes, their performance specification (for example light reflectance value (LRV), slip resistance and use of pattern) and their suitability for their intended use.

dsdc Dementia Design Accredited Product

UNIVERSITY of STIRLING

Orders & Quotes
01905 823 299
orders@akw-ltd.co.uk

General Enquiries
01905 823 298
sales@akw-ltd.co.uk

Technical Enquiries
01905 560 219
tech@akw-ltd.co.uk

Kitchen Enquiries
01905 823 262
kitchens@akw-ltd.co.uk

Fax
01905 823 297

AKW
Pointon Way, Hampton Lovett
Droitwich Spa, WR9 0LR

www.akw-ltd.co.uk
orders.akw-ltd.co.uk

AKW®
Life Made Better

© AKW Medi-Care Limited 2024

Artwork by Fox & Bear | foxbear.co.uk